SIEMENS

Operating instructions

SITRANS

Radar transmitters

SITRANS LR250 (FOUNDATION FIELDBUS)

Edition 06/2018

www.siemens.com/processautomation

SIEMENS

SITRANS

Radar Transmitters
LR250 (FOUNDATION FIELDBUS)

Operating Instructions

06/2018
A5E32221411-AF

Introduction 1
Safety information 2
Description 3
Installing/mounting 4
Connecting 5
Commissioning 6
Remote operation 7
Parameter reference 8
Service and maintenance 9
Diagnosing and troubleshooting 10
Technical data 11
Dimension drawings 12
Appendix A: Technical reference A
Appendix B: Communications via Foundation Fieldbus B
Appendix C: Certificates and support C
List of abbreviations 13
LCD menu structure 14

Legal information

Warning notice system

This manual contains notices you have to observe in order to ensure your personal safety, as well as to prevent damage to property. The notices referring to your personal safety are highlighted in the manual by a safety alert symbol, notices referring only to property damage have no safety alert symbol. These notices shown below are graded according to the degree of danger.

⚠DANGER

indicates that death or severe personal injury **will** result if proper precautions are not taken.

⚠WARNING

indicates that death or severe personal injury **may** result if proper precautions are not taken.

⚠CAUTION

indicates that minor personal injury can result if proper precautions are not taken.

NOTICE

indicates that property damage can result if proper precautions are not taken.

If more than one degree of danger is present, the warning notice representing the highest degree of danger will be used. A notice warning of injury to persons with a safety alert symbol may also include a warning relating to property damage.

Qualified Personnel

The product/system described in this documentation may be operated only by **personnel qualified** for the specific task in accordance with the relevant documentation, in particular its warning notices and safety instructions. Qualified personnel are those who, based on their training and experience, are capable of identifying risks and avoiding potential hazards when working with these products/systems.

Proper use of Siemens products

Note the following:

⚠WARNING

Siemens products may only be used for the applications described in the catalog and in the relevant technical documentation. If products and components from other manufacturers are used, these must be recommended or approved by Siemens. Proper transport, storage, installation, assembly, commissioning, operation and maintenance are required to ensure that the products operate safely and without any problems. The permissible ambient conditions must be complied with. The information in the relevant documentation must be observed.

Trademarks

All names identified by ® are registered trademarks of Siemens AG. The remaining trademarks in this publication may be trademarks whose use by third parties for their own purposes could violate the rights of the owner.

Disclaimer of Liability

We have reviewed the contents of this publication to ensure consistency with the hardware and software described. Since variance cannot be precluded entirely, we cannot guarantee full consistency. However, the information in this publication is reviewed regularly and any necessary corrections are included in subsequent editions.

Siemens AG
Division Process Industries and Drives
Postfach 48 48
90026 NÜRNBERG
GERMANY

Document order number: A5E32221411
℗ 04/2018 Subject to change

Copyright © Siemens AG 2015.
All rights reserved

Table of contents

1 Introduction 9

1.1 LR250 FF manual usage 9

1.2 Purpose of this documentation 9

1.3 Revision history 9

1.4 Checking the consignment 10

1.5 Security information 10

1.6 Transportation and storage 11

1.7 Notes on warranty 11

2 Safety information 13

2.1 Preconditions for safe use 13
2.1.1 Safety marking symbols 13
2.1.2 Laws and directives 13
2.1.3 FCC Conformity 13
2.1.4 Industry Canada conformity 14
2.1.5 Radio Equipment Directive (RED) 2014/53/EU 14
2.1.6 Conformity with European directives 14
2.1.7 CE Electromagnetic Compatibility (EMC) Conformity 15

2.2 Improper device modifications 16

2.3 Requirements for special applications 16

2.4 Use in hazardous areas 16

3 Description 19

3.1 SITRANS LR250 overview 19

3.2 Programming 20

3.3 Applications 20

3.4 Approvals and certificates 20

4 Installing/mounting 21

4.1 Basic safety information 21
4.1.1 Unsuitable cables, cable glands and/or plugs 22
4.1.2 Pressure applications 22
4.1.2.1 Pressure Equipment Directive, PED, 14/68/EU 23

4.2 Installation location requirements 24

4.3 Proper mounting 25
4.3.1 Nozzle design 26
4.3.2 Nozzle location 27
4.3.3 Orientation in a vessel with obstructions 29
4.3.4 Mounting on a Stillpipe or Bypass Pipe 30

4.3.5 Device orientation ... 31

4.4 Installation instructions ... 31
4.4.1 Threaded versions ... 33
4.4.2 Flanged versions ... 33
4.4.3 Hygienic versions ... 35

4.5 Disassembly ... 36

5 Connecting ... 37

5.1 Basic safety information ... 37

5.2 Connecting SITRANS LR250 ... 37

5.3 Wiring setups for hazardous area installation ... 40
5.3.1 Configuration with Foundation Fieldbus for hazardous areas ... 41
5.3.2 Intrinsically safe wiring ... 42
5.3.2.1 Intrinsically safe wiring (FM/CSA) ... 43
5.3.2.2 FISCO concept ... 43
5.3.3 Non-sparking wiring ... 45
5.3.4 Non-incendive wiring (US/Canada only) ... 45

5.4 Instructions specific to hazardous area installations ... 46
5.4.1 (Reference European ATEX Directive 2014/34/EU) ... 46

6 Commissioning ... 49

6.1 Basic safety information ... 49

6.2 Operating via the handheld programmer ... 49
6.2.1 Power up ... 50
6.2.2 Handheld programmer functions ... 50
6.2.2.1 The LCD display ... 51
6.2.2.2 Handheld programmer (Part No. 7ML1930-1BK) ... 52
6.2.3 Programming ... 53
6.2.3.1 Programming the radar device ... 53
6.2.3.2 Quick Start Wizard via the handheld programmer_note ... 58
6.2.3.3 Auto False Echo Suppression ... 61
6.2.3.4 Requesting an Echo Profile ... 61
6.2.3.5 Device Address ... 62

6.3 Application examples ... 62
6.3.1 Liquid resin in storage vessel, level measurement ... 62
6.3.2 Horizontal vessel with volume measurement ... 64
6.3.3 Application with stillpipe ... 65

7 Remote operation ... 69

7.1 Operating via AMS Device Manager ... 69
7.1.1 Functions in AMS Device Manager ... 69
7.1.2 Key features of AMS Device Manager Rev. 9.0 ... 71
7.1.2.1 Pull-down menu access ... 72
7.1.3 Adding a new device ... 72
7.1.3.1 Electronic Device Description (EDD) ... 72
7.1.4 Master Reset ... 74
7.1.5 Scan Device ... 74
7.1.6 Sensor calibration ... 74
7.1.7 Configuring a new device ... 75

7.1.7.1 Quick Start Wizard via AMS Device Manager 75
7.1.8 Changing parameter settings using AMS Device Manager 78
7.1.9 Configure/Setup (Level Transducer Block-LTB) 78
7.1.9.1 Identification (LTB) 78
7.1.9.2 Operation (LTB) 79
7.1.9.3 Setup (LTB) 81
7.1.9.4 Linearization (LTB) 83
7.1.9.5 Signal processing 85
7.1.9.6 Maintenance & Diagnostics (LTB) 89
7.1.9.7 Communication (LTB) 93
7.1.10 Configure/Setup (Liquid Crystal Display Block-LCD) 93
7.1.10.1 Identification (LCD) 93
7.1.10.2 Operation (LCD) 94
7.1.10.3 Setup (LCD) 95
7.1.10.4 Communication (LCD) 95
7.1.11 Configure/Setup (Diagnostic Transducer Block-DIAG) 95
7.1.11.1 Identification (DIAG) 96
7.1.11.2 Operation (DIAG) 96
7.1.11.3 Communication (DIAG) 96
7.1.12 Configure/Setup (Resource Block - RESOURCE) 96
7.1.12.1 Identification (RESOURCE) 97
7.1.12.2 Wizards (RESOURCE) 98
7.1.12.3 Operation (RESOURCE) 98
7.1.12.4 Maintenance & Diagnostics (RESOURCE) 100
7.1.12.5 Communication (RESOURCE) 102
7.1.12.6 Security (RESOURCE) 103
7.1.13 Device Diagnostics (Level Transducer Block - LTB) 103
7.1.13.1 Alarms & Errors (LTB) 103
7.1.13.2 Extended Diagnostics (LTB) 106
7.1.14 Device Diagnostics (Liquid Crystal Display Block - LCD) 107
7.1.14.1 Alarms & Errors (LCD) 107
7.1.15 Device Diagnostics (Diagnostic Transducer Block - DIAG) 107
7.1.15.1 Alarms & Errors (DIAG) 107
7.1.16 Device Diagnostics (Resource Block - RESOURCE) 107
7.1.16.1 Alarms & Errors (RESOURCE) 107
7.1.16.2 Extended Diagnostics (RESOURCE) 109
7.1.17 Process Variables (Level Transducer Block - LTB) 110
7.1.18 Password Protection 111
7.1.18.1 User Manager utility 111
7.1.19 AMS menu structure 113

8 Parameter reference 125

8.1 Alphabetical parameter list 165

9 Service and maintenance 171

9.1 Basic safety information 171

9.2 Cleaning 171

9.3 Maintenance and repair work 172
9.3.1 Unit repair and excluded liability 173
9.3.2 Part replacement 173

9.4 Disposal 175

9.5 Return procedure 175
10 Diagnosing and troubleshooting 177
10.1 Device status icons 178
10.2 General fault codes 179
10.3 Operation troubleshooting 184
11 Technical data 187
11.1 Power 187
11.2 Performance 187
11.3 Interface 189
11.4 Mechanical 189
11.5 Environmental 191
11.6 Process 192
11.7 Approvals 192
11.8 Programmer (infrared keypad) 194
12 Dimension drawings 195
12.1 Threaded horn antenna 195
12.2 Threaded horn antenna with extension 198
12.3 Flanged horn antenna 200
12.4 Flanged horn antenna with extension 202
12.5 Flanged encapsulated antenna (2"/DN50/50A sizes only) 204
12.6 Flanged encapsulated antenna (3"/DN80/80A sizes and larger) 206
12.7 Hygienic encapsulated antenna (2" ISO 2852 sanitary clamp) 208
12.8 Hygienic encapsulated antenna (3" ISO 2852 sanitary clamp) 209
12.9 Hygienic encapsulated antenna (4" ISO 2852 sanitary clamp) 210
12.10 Hygienic encapsulated antenna (DN50 nozzle/ slotted nut to DIN 11851) 211
12.11 Hygienic encapsulated antenna (DN80 nozzle/ slotted nut to DIN 11851) 212
12.12 Hygienic encapsulated antenna (DN100 nozzle/ slotted nut to DIN 11851) 213
12.13 Hygienic encapsulated antenna (DN50 aseptic slotted nut to DIN 11864-1) 214
12.14 Hygienic encapsulated antenna (DN80 aseptic slotted nut to DIN 11864-1) 215
12.15 Hygienic encapsulated antenna (DN100 aseptic slotted nut to DIN 11864-1) 216
12.16 Hygienic encapsulated antenna (DN50 aseptic flange to DIN 11864-2) 217
12.17 Hygienic encapsulated antenna (DN80 aseptic flange to DIN 11864-2) 218
12.18 Hygienic encapsulated antenna (DN100 aseptic flange to DIN 11864-2) 219
12.19 Hygienic encapsulated antenna (DN50 aseptic clamp to DIN 11864-3) 220
12.20 Hygienic encapsulated antenna (DN80 aseptic clamp to DIN 11864-3) 221

12.21 Hygienic encapsulated antenna (DN100 aseptic clamp to DIN 11864-3) 222
12.22 Hygienic encapsulated antenna (Tuchenhagen Type N) 223
12.23 Hygienic encapsulated antenna (Tuchenhagen Type F) 224
12.24 Threaded PVDF antenna 225
12.25 Threaded connection markings 226
12.26 Raised-Face flange 227
12.27 Raised-Face flange per EN 1092-1 for flanged encapsulated antenna 230
12.28 Flat-Face flange 232
12.29 Aseptic/hygienic flange DN50, DN80, DN100 for DIN 11864-2 234
12.30 Process connection tag (pressure rated versions) 237
A Appendix A: Technical reference 239
A.1 Principles of operation 239
A.2 Echo processing 240
A.2.1 Process Intelligence 240
A.2.2 Echo Selection 240
A.2.3 CLEF Range 244
A.2.4 Measurement Response 244
A.2.5 Echo Threshold 245
A.2.6 Echo Lock 245
A.2.7 Auto False Echo Suppression 245
A.2.8 Measurement Range 246
A.2.9 Damping 247
A.2.10 Loss of Echo (LOE) 247
A.2.10.1 LOE Timer 248
A.3 Maximum Process Temperature Chart 248
A.4 Process Pressure/Temperature derating curves 249
A.4.1 Pressure Equipment Directive, PED, 14/68/EU 250
A.4.2 Horn antenna 250
A.4.3 Flanged horn antenna 251
A.4.4 Flanged encapsulated antenna 255
A.4.5 PVDF antenna 257
A.4.6 Hygienic encapsulated antenna 258
B Appendix B: Communications via Foundation Fieldbus 263
B.1 Field Communicator 375 (F375) 263
C Appendix C: Certificates and support 265
C.1 Technical support 265
C.2 Certificates 265
13 List of abbreviations 267
14 LCD menu structure 269
Glossary 273
Index 279

Introduction 1

1.1 LR250 FF manual usage

Note

This manual applies to the SITRANS LR250 (FOUNDATION™ Fieldbus) only.
FOUNDATION™ Fieldbus is a trademark of Fieldbus Foundation.

Follow these operating instructions for quick, trouble-free installation, and maximum accuracy and reliability of your device.

We always welcome suggestions and comments about manual content, design, and accessibility. Please direct your comments to:

Technical publications (mailto:techpubs.smpi@siemens.com)

1.2 Purpose of this documentation

These instructions contain all information required to commission and use the device. Read the instructions carefully prior to installation and commissioning. In order to use the device correctly, first review its principle of operation.

The instructions are aimed at persons mechanically installing the device, connecting it electronically, configuring the parameters and commissioning it, as well as service and maintenance engineers.

1.3 Revision history

This history establishes the correlation between the current documentation and the valid firmware of the device.

The documentation of this edition is applicable for the following firmware:

Edition	Firm-ware rev.	PDM EDD rev.	Date	Changes
1.0	1.01.00	1.01.00	25 Feb 2010	• Initial release
2.0	1.01.04	1.01.00	2 Aug 2011	• Threaded PVDF antenna supported
01/2012	1.01.05	1.01.00	31 Oct 2012	• Antenna parameter removed • Quickstart on local display enhancements
08/2014	N/A	N/A	Jan 2014	• Flanged encapsulated antenna version added
08/2014	N/A	N/A	Aug 2014	• Hygienic encapsulated antenna version added
12/2015	N/A	N/A	Dec 2015	• Manual maintenance

Edition	Firm-ware rev.	PDM EDD rev.	Date	Changes

NOTICE

Use in a domestic environment

This Class A Group 1 equipment is intended for use in industrial areas.

In a domestic environment this device may cause radio interference.

1.4 Checking the consignment

1. Check the packaging and the delivered items for visible damages.
2. Report any claims for damages immediately to the shipping company.
3. Retain damaged parts for clarification.
4. Check the scope of delivery by comparing your order to the shipping documents for correctness and completeness.

⚠ WARNING

Using a damaged or incomplete device

Risk of explosion in hazardous areas.

- Do not use damaged or incomplete devices.

1.5 Security information

Siemens provides products and solutions with industrial security functions that support the secure operation of plants, systems, machines, and networks.

In order to protect plants, systems, machines and networks against cyber threats, it is necessary to implement – and continuously maintain – a holistic, state-of-the-art industrial security concept. Siemens' products and solutions only form one element of such a concept.

Customer is responsible to prevent unauthorized access to its plants, systems, machines and networks. Systems, machines and components should only be connected to the enterprise network or the internet if and to the extent necessary and with appropriate security measures (e.g. use of firewalls and network segmentation) in place.

Additionally, Siemens' guidance on appropriate security measures should be taken into account. You can find more information about industrial security by visiting: http://www.siemens.com/industrialsecurity.

Siemens' products and solutions undergo continuous development to make them more secure. Siemens strongly recommends to apply product updates as soon as available and to always use the latest product versions. Use of product versions that are no longer supported, and failure to apply latest updates may increase customer's exposure to cyber threats.

To stay informed about product updates, subscribe to the Siemens Industrial Security RSS Feed under
http://www.siemens.com/industrialsecurity.

1.6 Transportation and storage

To guarantee sufficient protection during transport and storage, observe the following:

- Keep the original packaging for subsequent transportation.
- Devices/replacement parts should be returned in their original packaging.
- If the original packaging is no longer available, ensure that all shipments are properly packaged to provide sufficient protection during transport. Siemens cannot assume liability for any costs associated with transportation damages.

⚠ CAUTION

Insufficient protection during storage

The packaging only provides limited protection against moisture and infiltration.

- Provide additional packaging as necessary.

1.7 Notes on warranty

The contents of this manual shall not become part of or modify any prior or existing agreement, commitment or legal relationship. The sales contract contains all obligations on the part of Siemens as well as the complete and solely applicable warranty conditions. Any statements regarding device versions described in the manual do not create new warranties or modify the existing warranty.

The content reflects the technical status at the time of publishing. Siemens reserves the right to make technical changes in the course of further development.

Safety information

2

2.1 Preconditions for safe use

This device left the factory in good working condition. In order to maintain this status and to ensure safe operation of the device, observe these instructions and all the specifications relevant to safety.

Observe the information and symbols on the device. Do not remove any information or symbols from the device. Always keep the information and symbols in a completely legible state.

2.1.1 Safety marking symbols

In manual	On product	Description
⚠	⚠ (Label on product: yellow back-ground.)	WARNING: refer to accompanying documents (manual) for details.

2.1.2 Laws and directives

Observe the test certification, provisions and laws applicable in your country during connection, assembly and operation.

2.1.3 FCC Conformity

US Installations only: Federal Communications Commission (FCC) rules

⚠ WARNING
Changes or modifications not expressly approved by Siemens Milltronics could void the user's authority to operate the equipment.

Note

- This equipment has been tested and found to comply with the limits for a Class A digital device, pursuant to Part 15 of the FCC Rules. These limits are designed to provide reasonable protection against harmful interference when the equipment is operated in a commercial environment.
- This equipment generates, uses, and can radiate radio frequency energy and, if not installed and used in accordance with the instruction manual, may cause harmful interference to radio communications. Operation of this equipment in a residential area is likely to cause harmful interference to radio communications, in which case the user will be required to correct the interference at his own expense.

2.1.4 Industry Canada conformity

Canada Installations only: Industry Canada (IC) rules

NOTICE

Use on a "no-interference, no-protection" basis

The installation of the LPR/TLPR device shall be done by trained installers, in strict compliance with the manufacturer's instructions.

- The use of this device is on a "no-interference, no-protection" basis. That is, the user shall accept operations of high-powered radar in the same frequency band which may interfere with or damage this device. However, devices found to interfere with primary licensing operations will be required to be removed at the user's expense.

2.1.5 Radio Equipment Directive (RED) 2014/53/EU

For the receiver test that covers the influence of an interferer signal to the device, the performance criterion has at least the following level of performance according to ETSI TS 103 361 [6]:

- Performance criterion: measurement value variation Δd over time during a distance measurement
- Level of performance: Δd ≤ ±50 mm

2.1.6 Conformity with European directives

The CE marking on the device symbolizes the conformity with the following European directives:

Electromagnetic compatibility EMC 2014/30/EU	Directive of the European Parliament and of the Council on the harmonisation of the laws of the Member States relating to electromagnetic compatibility
Low voltage directive LVD 2014/35/EU	Directive of the European Parliament and of the Council on the harmonisation of the laws of the Member States relating to the making available on the market of electrical equipment designed for use within certain voltage limits

Atmosphère explosible ATEX 2014/34/EU	Directive of the European Parliament and the Council on the harmonisation of the laws of the Member States relating to equipment and protective systems intended for use in potentially explosive atmospheres
Pressure equipment directive PED 2014/68/EU	Directive of the European Parliament and of the Council on the harmonisation of the laws of the Member States relating to the making available on the market of pressure equipment
RED 2014/53/EU	Directive of the European Parliament and of the Council on the harmonisation of the laws of the Member States relating to the making available on the market of radio equipment and repealing Directive 1999/5/EC

The applicable directives can be found in the EC conformity declaration of the specific device.

2.1.7 CE Electromagnetic Compatibility (EMC) Conformity

This equipment has been tested and found to comply with the following EMC Standards:

EMC Standard	Title
CISPR 11:2009 + A1:2010/EN 55011:2009 + A1:2010, CLASS A	Limits and methods of measurements of radio disturbance characteristics of industrial, scientific, and medical (ISM) radio-frequency equipment
EN 61326:2013 (IEC 61326:2012)	Electrical Equipment for Measurement, Control and Laboratory Use – Electromagnetic Compatibility.
EN61000-4-2:2009	Electromagnetic Compatibility (EMC) Part 4-2: Testing and measurement techniques – Electrostatic discharge immunity test.
EN61000-4-3:2006 + A1:2008 + A2:2010	Electromagnetic Compatibility (EMC) Part 4-3: Testing and measurement techniques – Radiated, radio-frequency, electromagnetic field immunity test 2006 + A1:2008 + A2:2010.
EN61000-4-4:2004 + A1:2010	Electromagnetic Compatibility (EMC) Part 4-4: Testing and measurement techniques – Electrical fast transient/burst immunity test.
EN61000-4-5:2006	Electromagnetic Compatibility (EMC) Part 4-5: Testing and measurement techniques – Surge immunity test.
EN61000-4-6:2010	Electromagnetic Compatibility (EMC) Part 4-6: Testing and measurement techniques – Immunity to conducted disturbances, induced by radio-frequency fields.
EN61000-4-8:2010	Electromagnetic Compatibility (EMC) Part 4-8: Testing and measurement techniques – Power frequency magnetic field immunity test.

2.2 Improper device modifications

WARNING

Improper device modifications

Risk to personnel, system and environment can result from modifications to the device, particularly in hazardous areas.

- Only carry out modifications that are described in the instructions for the device. Failure to observe this requirement cancels the manufacturer's warranty and the product approvals.

2.3 Requirements for special applications

Due to the large number of possible applications, each detail of the described device versions for each possible scenario during commissioning, operation, maintenance or operation in systems cannot be considered in the instructions. If you need additional information not covered by these instructions, contact your local Siemens office or company representative.

Note

Operation under special ambient conditions

We highly recommend that you contact your Siemens representative or our application department before you operate the device under special ambient conditions as can be encountered in nuclear power plants or when the device is used for research and development purposes.

2.4 Use in hazardous areas

Qualified personnel for hazardous area applications

Persons who install, connect, commission, operate, and service the device in a hazardous area must have the following specific qualifications:

- They are authorized, trained or instructed in operating and maintaining devices and systems according to the safety regulations for electrical circuits, high pressures, aggressive, and hazardous media.
- They are authorized, trained, or instructed in carrying out work on electrical circuits for hazardous systems.
- They are trained or instructed in maintenance and use of appropriate safety equipment according to the pertinent safety regulations.

WARNING

Loss of safety of device with type of protection "Intrinsic safety Ex i"

If the device has already been operated in non-intrinsically safe circuits or the electrical specifications have not been observed, the safety of the device is no longer ensured for use in hazardous areas. There is a danger of explosion.

- Connect the device with type of protection "Intrinsic safety" solely to an intrinsically safe circuit.
- Observe the specifications for the electrical data on the certificate.

Description

3

3.1 SITRANS LR250 overview

WARNING

Loss of protection

Danger to personnel, system and environment can result from improper use of the device.

- SITRANS LR250 is to be used only in the manner outlined in this manual, otherwise protection provided by the device may be impaired.

SITRANS LR250 is a 2-wire 25 GHz pulse radar level transmitter for continuous monitoring of liquids and slurries in storage vessels including high pressure and high temperature, to a range of 20 meters (66 feet). It is ideal for small vessels, material such as chemicals, food, beverages, solvents (including those of corrosive or aggressive nature), and low dielectric media.

The device consists of an electronic circuit coupled to an antenna and either a threaded or flange type process connection.

This device supports Foundation Fieldbus (FF) communication protocol. Signals are processed using Process Intelligence which has been field proven in over 1,000,000 applications worldwide (ultrasonic and radar). This device can be configured as an FF (H1) Link Master.

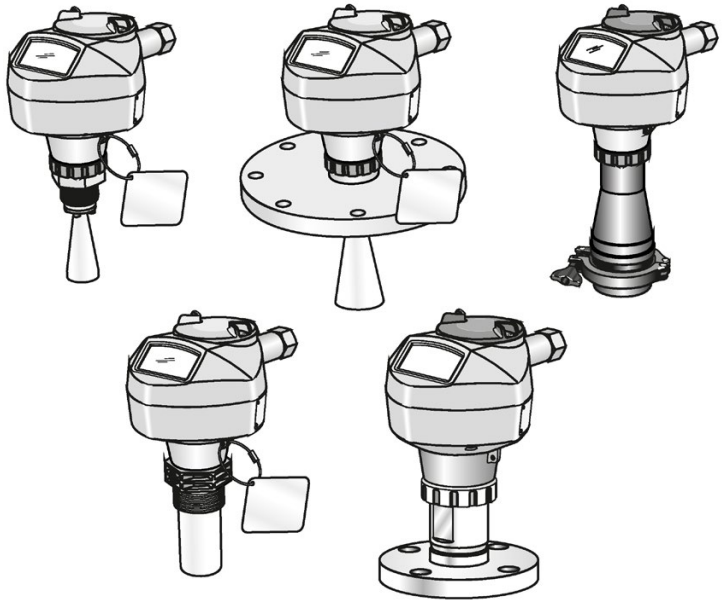

3.2 Programming

This device is very easy to install and configure via a graphical local user interface (LUI). You can modify the built in parameters either locally via the Siemens infrared handheld programmer, or from a remote location using one of the following options:

- FF host system
- AMS Device Manager

3.3 Applications

- liquids and slurries
- bulk storage vessels
- simple process vessels
- corrosive and aggressive
- hygienic/sanitary

3.4 Approvals and certificates

Note

For further details see Approvals (Page 192).

SITRANS LR250 is available with approvals for General purpose, sanitary or hygienic and for hazardous areas. In all cases, check the nameplate on your device, and confirm the approval rating.

Process Connections
A wide range of process connections and antenna options are available to suit virtually any vessel configuration.

Installing/mounting

4

4.1 Basic safety information

Note

Material compatibility

Siemens can provide you with support concerning selection of sensor components wetted by process media. However, you are responsible for the selection of components. Siemens accepts no liability for faults or failures resulting from incompatible materials.

⚠ WARNING

Unsuitable connecting parts

Risk of injury or poisoning.

In case of improper mounting, hot, toxic, and corrosive process media could be released at the connections.

- Ensure that connecting parts (such as flange gaskets and bolts) are suitable for connection and process media.

⚠ WARNING

Exceeded maximum ambient or process media temperature

Danger of explosion in hazardous areas.

Device damage.

- Make sure that the maximum permissible ambient and process media temperatures of the device are not exceeded.

4.1.1 Unsuitable cables, cable glands and/or plugs

WARNING

Unsuitable cables, cable glands and/or plugs

Risk of explosion in hazardous areas.

- Use only cable glands/plugs that comply with the requirements for the relevant type of protection.
- Tighten the cable glands in accordance with the torques specified in Installation instructions (Page 31).
- Close unused cable inlets for the electrical connections.
- When replacing cable, glands use only cable glands of the same type.
- After installation, check that the cables are seated firmly.

WARNING

Incorrect conduit system

Risk of explosion in hazardous areas as result of open cable inlet or incorrect conduit system.

- In the case of a conduit system, mount a spark barrier at a defined distance from the device input. Observe national regulations and the requirements stated in the relevant approvals.

4.1.2 Pressure applications

DANGER

Pressure applications

Danger to personnel, system and environment will result from improper disassembly.

- Never attempt to loosen, remove, or disassemble process connection while vessel contents are under pressure.

WARNING

Pressure applications

Danger to personnel, system and environment can result from improper installation.

- Improper installation may result in loss of process pressure.

⚠WARNING

Exceeded maximum permissible operating pressure

Danger of injury or poisoning.

The maximum permissible operating pressure depends on the device version. The device can be damaged if the operating pressure is exceeded. Hot, toxic and corrosive process media could be released.

- Make sure that the device is suitable for the maximum permissible operating pressure of your system.

Note

- The process connection tag shall remain with the process pressure boundary assembly. (The process pressure boundary assembly comprises the components that act as a barrier against pressure loss from the process vessel: that is, the combination of process connection body and emitter, but normally excluding the electrical enclosure). In the event the device package is replaced, the process connection tag shall be transferred to the replacement unit.
- Representative samples of this device have been hydrostatically tested, meeting or exceeding the requirement of the ASME Boiler and Pressure Vessel Code and the European Pressure Equipment Directive.

Note

- The serial numbers stamped in each process connection body, (flange, threaded, or sanitary), provide a unique identification number indicating date of manufacture. Example: MMDDYY – XXX (where MM = month, DD = day, YY = year, and XXX= sequential unit produced)
- Further markings (space permitting) indicate flange configuration, size, pressure class, material, and material heat code.

4.1.2.1 Pressure Equipment Directive, PED, 14/68/EU

Siemens Level Transmitters with flanged, threaded, or sanitary clamp type process mounts have no pressure-bearing housing of their own and, therefore, do not come under the Pressure Equipment Directive as pressure or safety accessories (see EU Commission Guideline A-08 and A-20).

4.2 Installation location requirements

⚠ WARNING

Aggressive atmospheres

Danger to personnel, system and environment can result from unsuitable environment.

- Provide an environment suitable to the housing rating and materials of construction.

⚠ CAUTION

Direct sunlight

Device damage.

The device can overheat or materials become brittle due to UV exposure.

- Protect the device from direct sunlight.
- Make sure that the maximum permissible ambient temperature is not exceeded. Refer to the information in Environmental (Page 191).

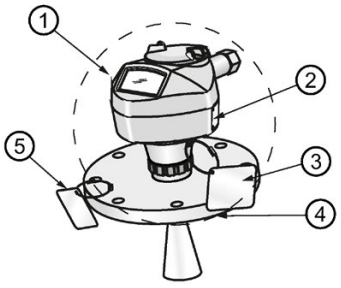

① Ambient temperature
② Device nameplate
③ Device tag
④ Process temperature (at process connection)
⑤ Process connection tag (contains process connection related information)

Antenna	①	③
Horn	-40 to +80 °C (-40 to +176 °F)	with FKM O-ring:-40 to +200 °C (-40 to 392 °F)
		with FFKM O-ring:-20 to +200 °C (-4 to +392 °F)
PVDF	-40 to +80 °C (-40 to +176 °F)	-40 to +80 °C (-40 to +176 °F)
Flanged encapsulated	-40 to +80 °C (-40 to +176 °F)	-40 to +170 °C (-40 to +338 °F)
Hygienic encapsulated	-40 to +80 °C (-40 to +176 °F)	-40 to +170 °C (-40 to +338 °F)
		with FKM seals used on process connection: -20 to +170 °C (-4 to +338 °F)
		with EPDM seals used on process connection: -40 to +120 °C (-40 to +248 °F)

Note

Details about the process connection, process temperature and materials are laser etched into the body of the flanged and hygienic versions. All other SITRANS LR250 versions have details listed on a tag.

4.3 Proper mounting

Note

- Correct location is key to a successful application.
- Avoid reflective interference from vessel walls and obstructions by following guidelines in this chapter.

NOTICE

Incorrect mounting

The device can be damaged, destroyed, or its functionality impaired through improper mounting.

- Before installing ensure there is no visible damage to the device.
- Make sure that process connectors are clean, and suitable gaskets and glands are used.
- Mount the device using suitable tools. Refer to the information in Installation instructions (Page 31).

Note

- On devices with a removable head, there is no limit to the number of times a device can be rotated without damage.
- When mounting, orient the front or back of the device towards the closest vessel wall or obstruction.
- Do not rotate the enclosure after programming and vessel calibration, otherwise an error may occur, caused by a polarity shift of the transmit pulse.

4.3.1 Nozzle design

Threaded PVDF antenna

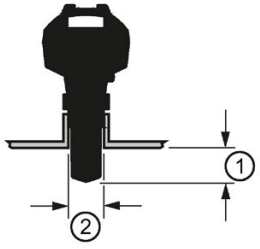

Stainless steel horn antenna

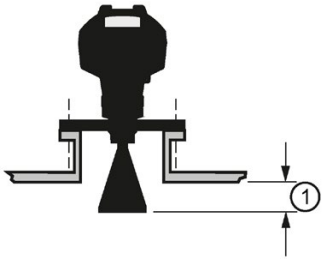

Flanged encapsulated antenna (FEA)

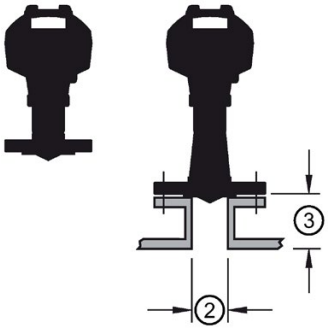

Hygienic encapsulated antenna (HEA)

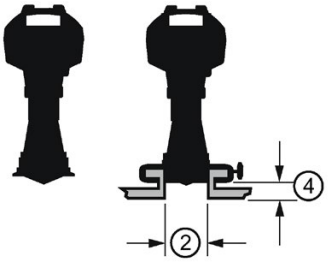

① Minimum clearance: 10 mm (0.4")

② Minimum diameter: 50 mm (2")

③ Maximum nozzle length

④ Maximum length/diameter ratio 1:1

- The end of the antenna must protrude a minimum of 10 mm (0.4") to avoid false echoes being reflected from the nozzle[1)].
- Minimum recommended nozzle diameter for the threaded PVDF antenna is 50 mm (2").
- An antenna extension (100 mm/3.93") is available for the horn antenna only.
- When installing the SITRANS LR250 with hygienic process connection, it is good hygienic practice to install the antenna in a nozzle that has a maximum length/diameter ratio of 1:1. For example, 2" (DN50) diameter nozzle should be no longer than 2" (50 mm).
- When removing any sanitary/hygienic clamp version of the HEA to clean the lens, ensure it is re-installed in the exact position it was removed from, to avoid re-commissioning the device.
- The maximum nozzle length for the FEA is 500 mm (19.68").

[1)] Not applicable for FEA or HEA

4.3.2 Nozzle location

- Avoid central locations on tall, narrow vessels
- Nozzle must be vertical and clear of imperfections

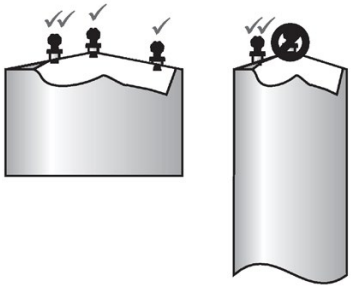

Preferred

Undesirable

Beam angle

Note

- Beam width depends on antenna size and is approximate: see below.
- For details on avoiding false echoes, see Auto False Echo Suppression (Page 245).

- Beam angle is the width of the cone where the energy density is half of the peak energy density.
- The peak energy density is directly in front of and in line with the antenna.
- There is a signal transmitted outside the beam angle, therefore false targets may be detected.

Horn antenna

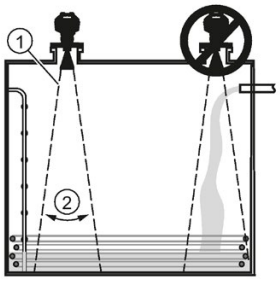

Flanged encapsulated antenna

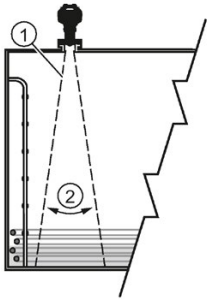

Threaded PVDF antenna

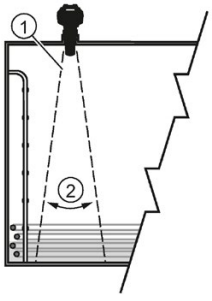

Hygienic encapsulated antenna

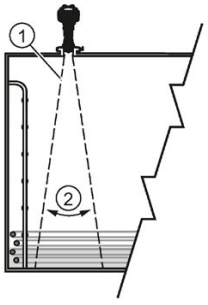

① Emission cone

② Beam angle

Emission cone type and beam angle

Antenna type	Antenna size		Beam angle
Horn	1.5"		19°
	2"		15°
	3"		10°
	4"		8°
Threaded PVDF			19°
	Process connection size	Process connection type	
Flanged encapsulated	2"	Class 150 ASME B16.5	12.8°
	3, 4, 6"	Class 150 ASME B16.5	9.6°
	50A	10K JIS B 2220	12.8°
	80A/100A/150A	10K JIS B 2220	9.6°
	DN50	PN10/16 EN1092-1	12.8°
	DN80/DN100/DN150	PN10/16 EN1092-1	9.6°
Hygienic encapsulated	2"	Sanitary Clamp according to ISO 2852	12.8°
	3, 4"		9.6°
	DN50	Aseptic/Hygienic nozzle/slotted	12.8°

Antenna type	Antenna size		Beam angle
	DN80/DN100	nut according to DIN 11864-1 [Form A]	9.6°
	DN50	Aseptic/Hygienic flanged according to DIN 11864-2 [Form A]	12.8°
	DN80/DN100		9.6°
	DN50	Aseptic/Hygienic Clamp according to DIN 11864-3 [Form A]	12.8°
	DN80/DN100		9.6°
	DN50	Hygienic nozzle/slotted nut according to DIN 11851	12.8°
	DN80/DN100		9.6°
	Type F (50 mm) and Type N (68 mm)	Tuchenhagen Varivent	12.8°

Emission cone

- Keep emission cone free of interference from obstructions such as ladders, pipes, I-beams, or filling streams.

Access for programming

- Provide easy access for viewing the display and programming via the handheld programmer.

4.3.3 Orientation in a vessel with obstructions

Polarization reference point

For best results on a vessel with obstructions, or a stillpipe with openings, orient the front or back of the device toward the obstructions. For an illustration, see Device orientation (Page 31).

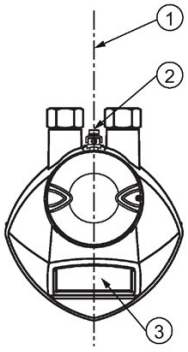

① Polarization axis
② Polarization reference point
③ Display

4.3.4 Mounting on a Stillpipe or Bypass Pipe

A stillpipe or bypass pipe is used for products with a low dK, or when vortex or extremely turbulent conditions exist. It can also be used to provide optimum signal conditions on foaming materials. See Dielectric constant of material measured in Performance (Page 187) for more information.

- The pipe diameter must be matched with the antenna size. Use the largest antenna size that will fit the stillpipe/bypass pipe[1]. See Threaded Horn dimensions (Page 195), Raised-Face Flange per EN 1092-1 (Page 230), Flanged encapsulated dimensions (Page 204)or Hygienic encapsulated dimensions (Page 209).
- One continuous length of metallic pipe is preferred, without joints.
- Any false reflections created by joints/welds/imperfections will lead to inaccuracies of the measurement.
- Joints (if unavoidable) must be machined to ± 0.25 mm (± 0.010") and must have welded connecting sleeve on the outside.
- If using any hygienic process connections in conjunction with a stillpipe/bypass, please ensure that the antenna/lens are cleanable in accordance with the applicable approval.

[1] Mounting in a pipe greater than 100 mm (4") can cause large errors, and therefore is not recommended.

Suitable pipe diameters:	Horn antenna	40 to 100 mm (1.5 to 4")
	PVDF antenna	50 mm (2") only
	Flanged encapsulated antenna	50 to 100 mm (2 to 4")
	Hygienic encapsulated antenna	50 to 100 mm (2 to 4")
Not recommended:	> 100 mm (4")	
Bypass vent:	Required at the upper end of the bypass [1]	

[1] To equalize pressure and keep the liquid level in the bypass constant with the liquid level in the vessel.

4.3.5 Device orientation

Bypass pipe installation

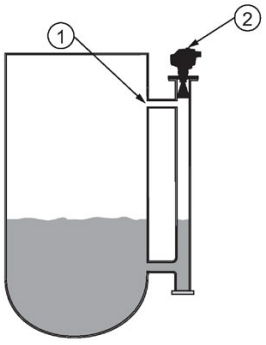

① Vent

② Align front or back of device with vents[1)]

Stillpipe installation

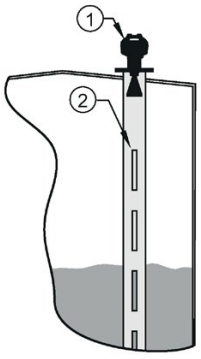

① Align front or back of device with stillpipe slots[1)]

② Slots

[1)] Horn antenna version shown as example

4.4 Installation instructions

WARNING

Pressure applications

Danger to personnel, system and environment can result from improper installation.

- Improper installation may result in loss of process pressure.

WARNING

Improper installation

Danger to personnel, system and environment can result from improper installation.

- Installation shall only be performed by qualified personnel and in accordance with local governing regulations.

NOTICE

Device handling

Damage to device may result from improper handling.

- Handle the device using the enclosure, not the process connection or tag, to avoid damage.
- Take special care when handling the threaded PVDF and Hygienic or Flanged encapsulated antennas. Any damage to the antenna surface, particularly to the tip/lens, could affect performance. (For example, do not sit device on its lens antenna.)

Note

- For European Union and member countries, installation must be according to ETSI EN 302372.
- Refer to the device nameplate for approval information.

Note

Do not remove the PTFE lens. It is a critical component for operation.

Note

The outer part of the lens on the flanged encapsulated antenna version may not appear to lie flush before installation and this is normal. This will flatten after installation and will not impact the performance of the device.

⚠ WARNING

Pressure applications

Danger of injury or poisoning.

It will be necessary to use PTFE tape or other appropriate thread sealing compound, and to tighten the process connection beyond hand-tight. (The maximum recommended torque for Threaded versions is 40 N-m (30 ft.lbs.) See Flanged versions (Page 33) for FEA recommended torque values.)

Note

- On devices with a removable head, there is no limit to the number of times a device can be rotated without damage.
- When mounting, orient the front or back of the device towards the closest vessel wall or obstruction.
- Do not rotate the enclosure after programming and vessel calibration, otherwise an error may occur, caused by a polarity shift of the transmit pulse.

4.4.1 Threaded versions

⚠ WARNING

Pressure applications

Danger of injury or poisoning.

It may be necessary to use PTFE tape or other appropriate thread sealing compound, and to tighten the process connection beyond hand-tight. (The maximum recommended torque for Threaded versions is 40 N-m (30 ft.lbs.)

1. Before inserting the device into its mounting connection, check to ensure the threads are matching, to avoid damaging them.
2. Simply screw the device into the process connection, and hand tighten, or use a wrench.

4.4.2 Flanged versions

NOTICE

Improper materials

The user is responsible for the selection of bolting and gasket materials (except for Flanged encapsulated antenna) which will fall within the limits of the process connection and its intended use, and which are suitable for the service conditions.

Special Instructions for Flanged encapsulated antenna only

Note

- Use spring washers
- Lens assembly acts as integral gasket, no other required
- Use recommended torque values for tightening bolts

Flange bolting: recommended torque

Pressure class	Nominal pipe size (NPS)	Number of bolts	Recommended torque (Nm)
ASME B16.5, Class 150	2"	4	30 – 50
	3"		50 – 70
	4"	8	40 – 60
	6"		70 – 90
EN1092-1, PN16 / JIS B 2220, 10K	DN50/50A	4	30 – 50
	DN80/80A	8	
	DN100/100A		
	DN150/150A		60 – 80

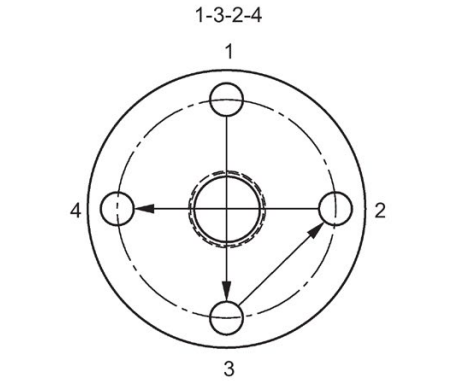

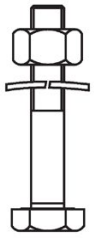

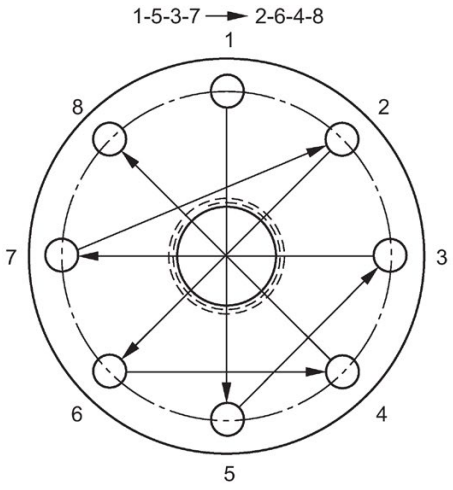

Flange bolting instructions:

1. Use cross-pattern sequence as shown.
2. Check uniformity of the flange gap.
3. Apply adjustments by selective tightening if required.
4. Torque incrementally until desired value is reached.
5. Check/re-torque after 4 to 6 hours.

Recommendations for flange bolting:

- Check bolts periodically, re-torque as required.
- Use new lens, O-ring and spring washers after removal from installation.
  For instructions on replacing the lens, see Part replacement (Page 173).

See Flanged Horn with extension (Page 200), Raised-Face Flange per EN 1092-1 (Page 230), Flat-Face Flange (Page 232), and Flanged encapsulated antenna (3"/DN80/80A sizes and larger) (Page 206) for dimensions.

4.4.3 Hygienic versions

⚠WARNING

Loss of sanitary approvals

Loss of sanitary approvals can result from improper installation/mounting.

- Take special care when installing in hygienic or sanitary applications. Comply with installation/mounting guidelines to ensure cleanliness and the ability to keep the wetted parts in a position to be readily cleanable. (See relevant EHEDG/3A documentation - not supplied).

NOTICE

Loss of sanitary approvals

- For 3-A Sanitary Approved device installation where the customer tank process connection exists, a leak detection port of minimum 2.4 mm diameter must be provided at the lowest point in the process connection where leakage can occur.
- If leakage is detected at any time while the device is installed, then the device process connection parts must be disassembled and thoroughly cleaned prior to gasket replacement and reassembly.

Note

- For Hygienic encapsulated antenna, the lens acts as a gasket/seal and should be used in conjunction with a cleanable seal as required by the specific process connections (for example, DIN 11864-3).

Hygienic encapsulated antenna leak detection port

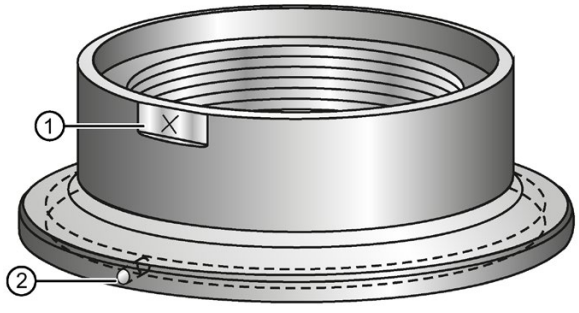

① Orientation mark for leak detection port

② Leak detection port

4.5 Disassembly

DANGER

Pressure applications

Danger to personnel, system and environment will result from improper disassembly.

- Never attempt to loosen, remove, or disassemble process connection while vessel contents are under pressure.

WARNING

Incorrect disassembly

The following risks may result from incorrect disassembly:

- Injury through electric shock

- Risk through emerging media when connected to the process

- Risk of explosion in hazardous area

In order to disassemble correctly, observe the following:

- Before starting work, make sure that you have switched off all physical variables such as pressure, temperature, electricity etc. or that they have a harmless value.
- If the device contains hazardous media, it must be emptied prior to disassembly. Make sure that no environmentally hazardous media are released.
- Secure the remaining connections so that no damage can result if the process is started unintentionally.

Connecting 5

5.1 Basic safety information

NOTICE
Condensation in the device Damage to device through formation of condensation if the temperature difference between transportation or storage and the mounting location exceeds 20 °C (36 °F). • Before taking the device into operation let the device adapt for several hours in the new environment.

⚠ WARNING
Missing PE/ground connection Risk of electric shock. Depending on the device version, connect the power supply as follows: • **Power plug**: Ensure that the used socket has a PE/ground conductor connection. Check that the PE/ground conductor connection of the socket and power plug match each other. • **Connecting terminals**: Connect the terminals according to the terminal connection diagram. First connect the PE/ground conductor.

5.2 Connecting SITRANS LR250

⚠ WARNING
Incorrect connection to power source Risk to personnel, system and environment can result from improper power connection. • The DC input terminals shall be supplied from a source providing electrical isolation between the input and output, in order to meet the applicable safety requirements of IEC 61010-1. For example, Class 2 or Limited Energy Source. • All field wiring must have insulation suitable for rated voltages.

WARNING

Loss of protection

Loss of approvals can result from improper connection.

- Check the nameplate on your device, to verify the approval rating.
- Use appropriate cable entry seals to maintain IP or NEMA rating.
- See Wiring setups for hazardous area installation (Page 40).

NOTICE

Improper cables and conduit

- Separate cables and conduits may be required to conform to standard instrumentation wiring practices or electrical codes.

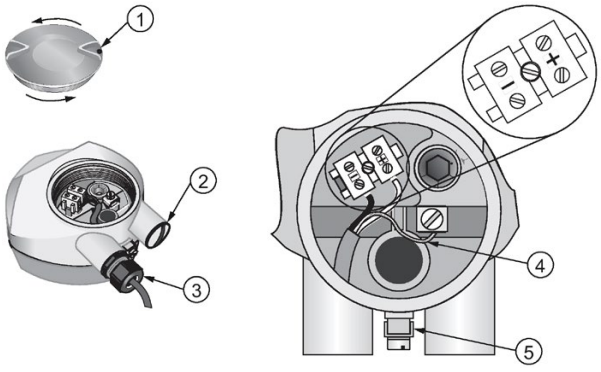

① Use a 2 mm Allen key to loosen the lid-lock set screw [c)]

② Plug (IP68)

③ Optional cable gland[a) b)](or NPT cable entry)[b)]

④ Cable shield

⑤ Ground terminal

[a)]May be shipped with the device.

[b)]If cable is routed through conduit, use only approved suitable-size hubs for waterproof applications.

[c)]Not applicable to 3-A Sanitary approved device.

Wiring instructions

1. Strip the cable jacket for approximately 70 mm (2.75") from the end of the cable, and thread the wires through the gland. (If cable is routed through conduit, use only approved suitable-size hubs for waterproof applications.)
2. Connect the wires to the terminals as shown: SITRANS LR250 (FF) is not polarity sensitive.
3. Ground the device according to local regulations.
4. Tighten the gland to form a good seal.
5. Close the lid and secure the locking screw before programming and device configuration.

Note

Lid-lock set screw not applicable to 3-A Sanitary approved device.

Note

- Foundation Fieldbus (H1) must be terminated at both extreme ends of the cable for it to work properly.
- For optimum EMC protection, it is recommended that the FF H1 cable shield be connected to ground at every node.
- Please refer to the Foundation Fieldbus System Engineering Guidelines (AG-181) Revision 2.0, for information on installing FF (H1) devices available from: Foundation Fieldbus (http://www.fieldbus.org/)
- If a Weidmüller or other current limiting junction box is connected to this device, please ensure that the current limit is set to 40 mA or higher.

Basic Configuration with Foundation Fieldbus (H1)

Configuration via Gateway

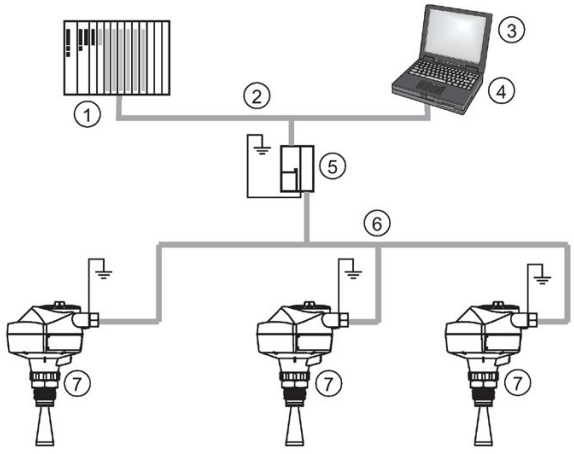

① Controller
② FF (HSE)
③ Configurator software
④ PC/laptop
⑤ Rosemount 3420 HSE/H1Gateway
⑥ FF (H1)
⑦ LR250 FF

Configuration via Linking Device

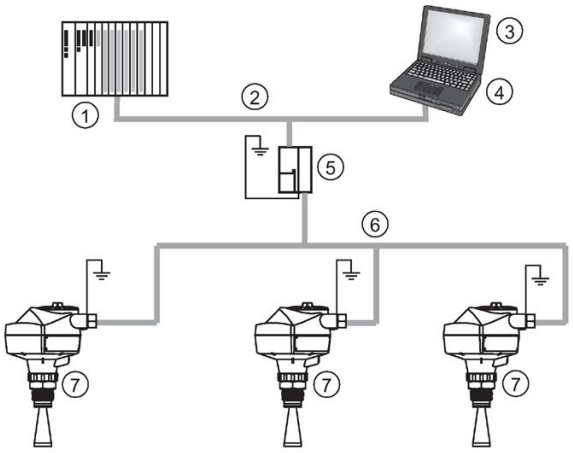

① Controller
② FF (HSE)
③ Configurator software
④ PC/laptop
⑤ HSE/H1 Linking Device
⑥ FF (H1)
⑦ LR250 FF

Configuration via PCI/PCMCIA Card

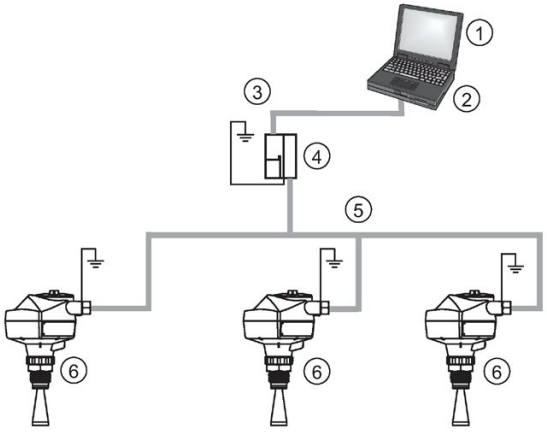

① Configurator software
② PC/laptop
③ PCI/PCMCIA bus
④ H1 Interface
⑤ FF (H1)
⑥ LR250 FF

5.3 Wiring setups for hazardous area installation

There are three wiring options for hazardous area installations:

- Intrinsically safe wiring (Page 42)
- Non-sparking wiring (Page 45)
- Non-incendive wiring (US/Canada only) (Page 45)

In all cases, check the nameplate on your instrument, confirm the approval rating, and perform installation and wiring according to your local safety codes.

5.3.1 Configuration with Foundation Fieldbus for hazardous areas

Configuration via Gateway

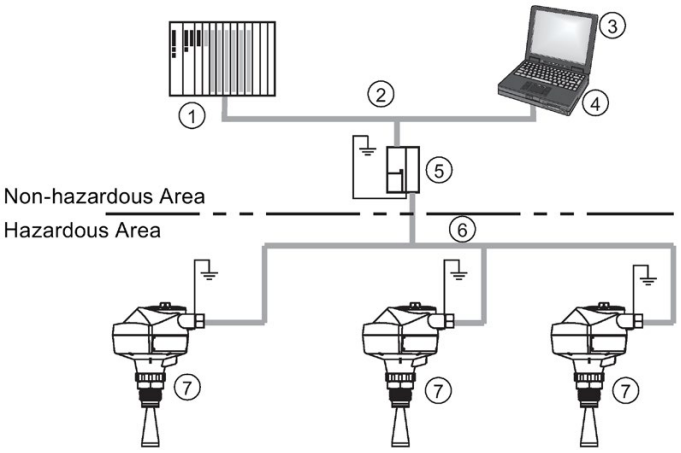

① Controller
② FF (HSE)
③ Configurator software
④ PC/laptop
⑤ Ex ia type HSE/H1
⑥ FF (H1)
⑦ LR250 FF

Configuration via Linking Device

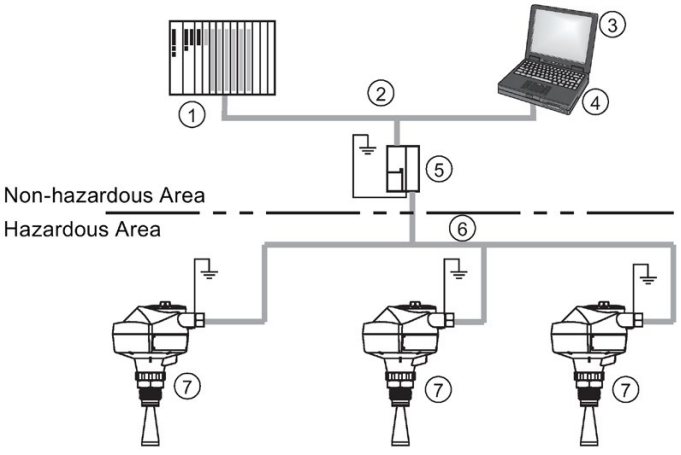

① Controller
② FF (HSE)
③ Configurator software
④ PC/laptop
⑤ Ex ia type HSE/H1 Linking Device
⑥ FF (H1)
⑦ LR250 (FF)

Configuration via PCI/PCMCIA Card

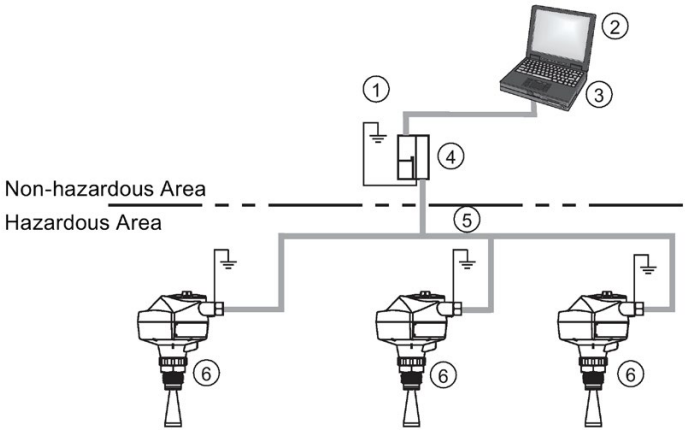

① PCI/PCMCIA bus
② Configurator software
③ PC/laptop
④ Ex ia type H1 Interface
⑤ FF (H1)
⑥ LR250 FF

5.3.2 Intrinsically safe wiring

Device nameplate (ATEX/IECEx/RCM)

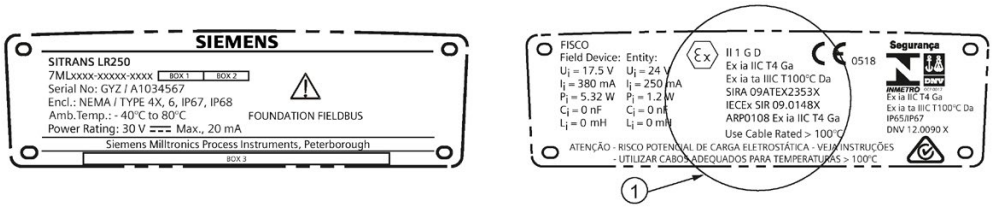

① ATEX certificate

The ATEX certificates listed on the nameplate can be downloaded from our website:

Product page (http://www.siemens.com/LR250)

Go to **Support > Approvals / Certificates.**

The IECEx certificate listed on the nameplate can be viewed on the IECEx website. Go to:

IECEx (http://iecex.iec.ch/)

Click on **Certified Equipment** and enter the certificate number **IECEx SIR 09.0148X.**

5.3.2.1 Intrinsically safe wiring (FM/CSA)

Device nameplate (FM/CSA)

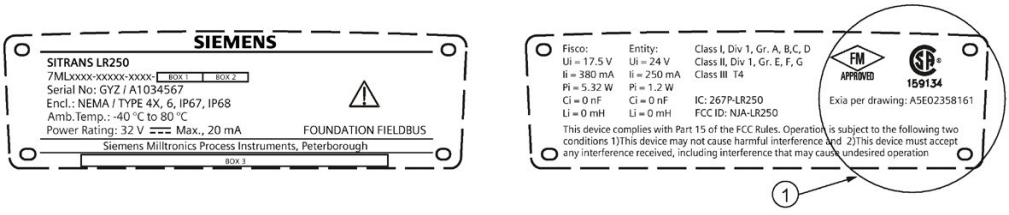

① Connection drawing number

The FM/CSA Intrinsically Safe connection drawing A5E02358161 can be downloaded from the Siemens Industry Image Database:

SITRANS LR250 Foundation Fieldbus connection drawing (A5E02358161)
(http://www.automation.siemens.com/bilddb/index.aspx?gridview=view2&objkey=G_FI01_XX_11098&showdetail=true&view=Search)

- For wiring requirements: follow local regulations.
- Approved dust-tight and water-tight conduit seals are required for outdoor NEMA 4X / type 4X / NEMA 6, IP67, IP68 locations.
- Refer to Instructions specific to hazardous area installations (Page 46).

Entity concept:

The Entity Concept allows interconnection of intrinsically safe apparatus to associated apparatus not specifically examined in such combination. The criteria for interconnection is that the voltage and current which intrinsically safe apparatus can receive and remain intrinsically safe, considering faults, must be equal to or greater than the output voltage (Uo) and output current (Io) levels which can be delivered by the associated apparatus, considering faults and applicable factors. In addition, the maximum unprotected capacitance (Ci) and Inductance (Li) of the intrinsically safe apparatus, including interconnecting wiring, must be equal to or less than the capacitance and inductance which can be safely connected to associated apparatus.

5.3.2.2 FISCO concept

FISCO Concept

Note

Connection drawing

For complete details and instructions regarding the FISCO Concept, see the FM/CSA connection drawing which can be downloaded from the Siemens Industry Image Database:
SITRANS LR250 Foundation Fieldbus connection drawing (A5E02358161)
(http://www.automation.siemens.com/bilddb/index.aspx?gridview=view2&objkey=G_FI01_XX_11098&showdetail=true&view=Search)

The FISCO Concept allows interconnection of intrinsically safe apparatus to associated apparatus not specifically examined in such combination. The criteria for interconnection is that the voltage (Ui or Vmax), the current (Ii, or Imax) and the power (Pi, or Pmax) which intrinsically safe apparatus can receive and remain intrinsically safe, considering faults, must be equal to or greater than the voltage (Uo or Voc or Vi), the current (Io or Isc or Ii), and the power (Po or Pmax) levels which can be delivered by the associated apparatus, considering faults and applicable factors. In addition, the maximum unprotected capacitance (Ci) and inductance (Li) of each apparatus (other than the termination) connected to the fieldbus must be less than or equal to 5 nF and 10 µH respectively.

In each segment only one active device, normally the associated apparatus, is allowed to provide the necessary energy for the fieldbus system. The allowed voltage Uo (or Voc or Vt) of the associated apparatus is limited to the range of 14V dc to 24V dc. All other equipment connected to the bus cable has to be passive, meaning that they are not allowed to provide energy to the system, except for a leakage current of 50 µA for each connected device. Separately powered equipment needs a galvanic isolation to assure that the Intrinsically Safe fieldbus circuit remains passive.

Under the entity evaluation concept, SITRANS LR250 has the following characteristics:

(input voltage) U_i	= 24 V
(input current) I_i	= 250 mA
(input power) P_i	= 1.2 W
(internal capacitance) Ci	= 0
(internal inductance) Li	= 0

Under the FISCO evaluation concept, SITRANS LR250 has the following characteristics:

(input voltage) U_i	= 17.5 V
(input current) I_i	= 380 mA
(input power) P_i	= 5.32 W
(internal capacitance) Ci	= 0
(internal inductance) Li	= 0

5.3.3 Non-sparking wiring

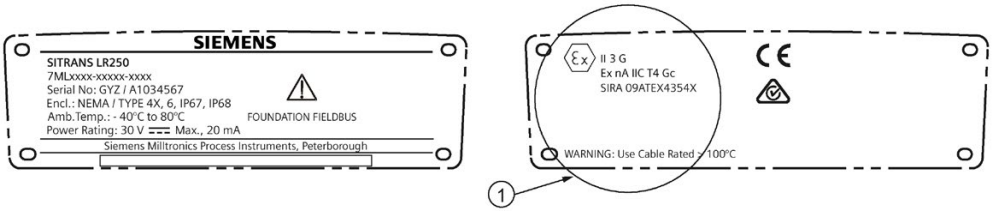

① ATEX certificate

The ATEX certificate listed on the nameplate can be downloaded from our website:

Product page (http://www.siemens.com/LR250)

Go to: **Support > Approvals/Certificates**.

- For wiring requirements follow local regulations.
- Approved dust-tight and water-tight conduit seals are required for outdoor NEMA 4X / type 4X / NEMA 6, IP67, IP68 locations.

5.3.4 Non-incendive wiring (US/Canada only)

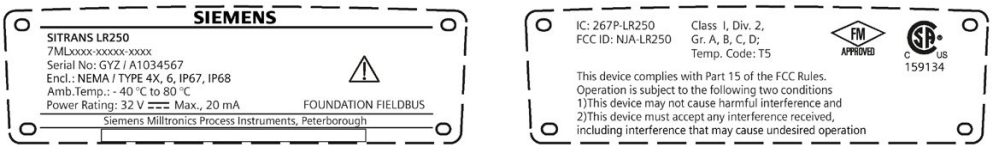

FM/CSA Class 1, Div 2 connection drawing number 23650673 can be downloaded from Siemens Industry Image Database:

FM/CSA Class 1, Div 2 connection drawing 23650673 (http://www.automation.siemens.com/bilddb/index.aspx?gridview=view2&objkey=G_FI01_XX_03551&showdetail=true&view=Search)

- For wiring requirements: follow local regulations.
- Approved dust-tight and water-tight conduit seals are required for outdoor NEMA 4X / type 4X / NEMA 6, IP67, IP68 locations.
- Refer to Instructions specific to hazardous area installations (Page 46).

5.4 Instructions specific to hazardous area installations

5.4.1 (Reference European ATEX Directive 2014/34/EU)

The following instructions apply to equipment covered by certificate number SIRA 06ATEX2353X and 09ATEX4354X:

1. For use and assembly, refer to the main instructions.
2. The equipment is certified for use as Category 1GD equipment per SIRA 06ATEX2353X, and Category 3G equipment per SIRA 09ATEX4354X.
3. The equipment may be used with flammable gases and vapors with apparatus group IIC, IIB and IIA and temperature classes T1, T2, T3 and T4.
4. The equipment has a degree of ingress protection of IP67 and a temperature class of T100 °C and may be used with flammable dusts.
5. The equipment is certified for use in an ambient temperature range of –40 °C to +80 °C.
6. The equipment has not been assessed as a safety related device (as referred to by Directive 2014/34/EU, clause 1.5).
7. Installation and inspection of this equipment shall be carried out by suitably trained personnel in accordance with the applicable code of practice (EN 60079-14 and EN 60079-17 in Europe).
8. The equipment is non-repairable.
9. The certificate numbers have an 'X' suffix, which indicates that special conditions for safe use apply. Those installing or inspecting this equipment must have access to the certificates.
10. If the equipment is likely to come into contact with aggressive substances, then it is the responsibility of the user to take suitable precautions that prevent it from being adversely affected, thus ensuring that the type of protection is not compromised.
    - Aggressive substances: e.g. acidic liquids or gases that may attack metals, or solvents that may affect polymeric materials.
    - Suitable precautions: e.g. establishing from the material's data sheet that it is resistant to specific chemicals.

Special conditions for safe use (denoted by X after the certificate number)

- Parts of the enclosure may be non-conducting and may generate an ignition-capable level of electrostatic charge under certain extreme conditions. The user should ensure that the equipment is not installed in a location where it may be subjected to external conditions (such as high-pressure steam), which might cause a build-up of electrostatic charge on non-conducting surfaces.
- Aluminium, magnesium, titanium or zirconium may be used at the accessible surface of the equipment. In the event of rare incidents, ignition sources due to impact and friction sparks could occur. This shall be considered when the SITRANS LR250 FF is being installed in locations that specifically require Equipment Protection level Ga or Da.
- The equipment shall be infallibly bonded according to the relevant code of practice.
- The end use must ensure that the explosion protection and ingress protection of IP64 is maintained at each entry to the enclosure by use of a blanking element or cable entry device that meets the requirements of the protection concepts type 'n' or increased safety 'e' or flameproof 'd'.

Commissioning

6

6.1 Basic safety information

⚠ WARNING

Loss of explosion protection

Risk of explosion when device is not properly commissioned

If opening device

- Isolate from power.

- or -

- Ensure that the atmosphere is explosion-free (hot work permit).

Ensure device is properly closed before returning to operation.

6.2 Operating via the handheld programmer

The handheld programmer used with this device contains lithium batteries that are non-replaceable.

Lithium batteries are primary power sources with high energy content designed to provide the highest possible degree of safety.

⚠ WARNING

Potential hazard

Lithium batteries may present a potential hazard if they are abused electrically or mechanically. Observe the following precautions when handling and using lithium batteries:

- Do not short-circuit, recharge or connect with false polarity.
- Do not expose to temperatures beyond the specified temperature range.
- Do not incinerate.
- Do not crush, puncture or open cells or disassemble.
- Do not weld or solder to the battery’s body.
- Do not expose contents to water.

6.2.1 Power up

Power up the device. A transition screen showing first the Siemens logo and then the current firmware revision is displayed while the first measurement is being processed. SITRANS LR250 automatically starts up in Measurement mode. The first time the device is configured, you will be prompted to select a language (English, German, French, Spanish or Chinese).To change the language again, see **Language (7.)**.

Press **Mode** to toggle between Measurement and Program mode.

[If the SITRANS LR250 FF is to be used in an FF application, configure using a network configuration tool, such as DeltaV or NI-FBUS Configurator. See Quick Start Wizard via AMS Device Manager (Page 75).]

Follow these steps to configure the device via the LUI:

- Complete the Quick Start Wizard [see Quick Start Wizard via the handheld programmer (Page 58)]. Completing the Quick Start Wizard or writing any parameter via the LUI causes the device to begin measuring. The Resource Block (RES) and Level Transducer Block (LTB) will move to Automatic mode.
- AIFB 1 and AIFB 2 will remain Out of Service (as displayed on the LCD). These blocks can only be configured and scheduled using a network configuration tool. For more details, see System Integration in manual Foundation Fieldbus for Level Instruments (7ML19985MP01).

Note

The last step of the Quick Start run from the LUI will place the RESOURCE block in Automatic mode.

6.2.2 Handheld programmer functions

The radar device carries out its level measurement tasks according to settings made via parameters. The settings can be modified locally via the Local User Interface (LUI) which consists of an LCD display and a handheld programmer.

A Quick Start Wizard provides an easy step-by-step procedure to configure the device for a simple application. Access the wizards:

- locally [see Quick Start Wizard via the handheld programmer (Page 58)]
- or from a remote location [see Quick Start Wizard via AMS Device Manager (Page 75)]

For more complex setups see Application Examples (Page 62), and for the complete range of parameters see Parameter Reference (Page 125).

6.2.2.1 The LCD display

Measurement mode display

Normal operation

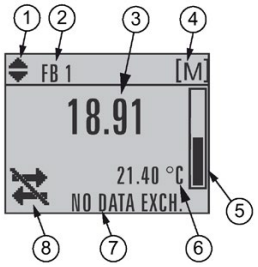

① toggle indicator [a] for analog input function blocks (AIFB 1/AIFB 2, displayed as FB1/FB2)
② identifies which block is source of displayed value
③ Measured value (level, space, distance, or volume)
④ Units
⑤ Bar graph indicates level
⑥ Secondary region indicates on request [b] electronics temperature, echo confidence, loop current, or distance
⑦ Text area displays status messages
⑧ Device status indicator, see Device status icons (Page 178)

[a] Press **UP** or **DOWN** arrow to switch.

[b] In response to a key press request. For details, see Handheld programmer (Part No. 7ML1930-1BK) (Page 52) for key functions in Measurement mode.

Fault present

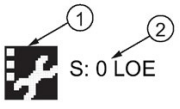

① service required icon appears
② Device status indicator, see Device status icons (Page 178)

PROGRAM mode display

Navigation view

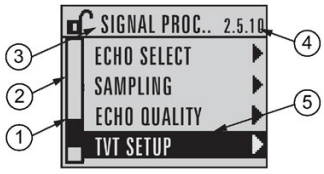

① Item band
② Menu bar
③ Current menu
④ Current item number
⑤ Current item

- A visible menu bar indicates the menu list is too long to display all items.
- A band halfway down the menu bar indicates the current item is halfway down the list.
- The depth and relative position of the item band on the menu bar indicates the length of the menu list, and approximate position of the current item in the list.
- A deeper band indicates fewer items.

Parameter view

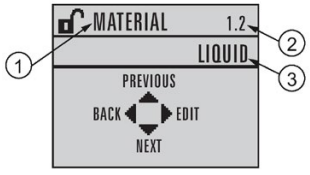

Edit view

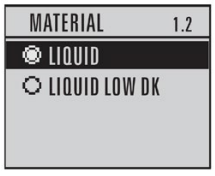

① Parameter name ② Parameter number ③ Parameter value/selection

6.2.2.2 Handheld programmer (Part No. 7ML1930-1BK)

The programmer is ordered separately.

Key functions in measurement mode

Key	Function	Result
6	Updates internal enclosure temperature reading.	New value is displayed in LCD secondary region.
8	Updates echo confidence value.	
	Updates distance measurement.	
	Mode opens PROGRAM mode.	Opens the menu level last displayed in this power cycle, unless power has been cycled since exiting PROGRAM mode or more than 10 minutes have elapsed since PROGRAM mode was used. Then top level menu will be displayed.
	RIGHT arrow opens PROGRAM mode.	Opens the top level menu.
	UP or **DOWN arrow** toggles between AIFB 1 and AIFB 2.	Identifies which AIFB is the source of the displayed value.

6.2.3 Programming

6.2.3.1 Programming the radar device

Note

- While the device is in PROGRAM mode the output remains fixed and does not respond to changes in the device.
- The device automatically returns to Measurement mode after a period of inactivity in PROGRAM mode (between 15 seconds and 2 minutes, depending on the menu level).

Change parameter settings and set operating conditions to suit your specific application. For remote operation see Operating via AMS Device Manager (Page 69).

Parameter menus

Note

For the complete list of parameters with instructions, see Parameter reference (Page 125).

Parameters are identified by name and organized into function groups. See LCD menu structure (Page 269).

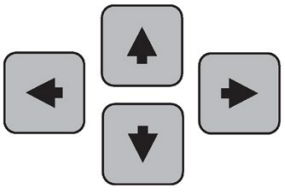

1. QUICK START
2. SETUP
    - 2.1. IDENTIFICATION
    - 2.2. DEVICE
    - .....
    - 2.4. LINEARIZATION
        - 2.4.1. VOLUME
            - 2.4.1.1. VESSEL SHAPE

1. Enter PROGRAM mode

- Point the programmer at the display from a maximum distance of 300 mm (1 ft).
- **RIGHT arrow** activates PROGRAM mode and opens menu level 1.
- **Mode** opens the menu level last displayed in PROGRAM mode within the last 10 minutes, or menu level 1 if power has been cycled since then.

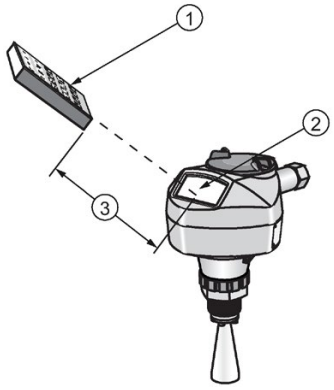

① Handheld programmer ② Display ③ Maximum distance: 300 mm (1 ft)

2. Navigating: key functions in Navigation mode

Note

- In Navigation mode **ARROW** keys move to the next menu item in the direction of the arrow.
- For Quick Access to parameters via the handheld programmer, press Home , then enter the menu number, for example: **Volume (2.4.1.), press 2.4.1.**

Key	Name	Menu level	Function
	UP or **DOWN arrow**	menu or parameter	Scroll to previous or next menu or parameter
	RIGHT arrow	menu	Go to first parameter in the selected menu, or open next menu.
		parameter	Open **Edit** mode.
	LEFT arrow	menu or parameter	Open parent menu.
	Mode	menu or parameter	Change to **MEASUREMENT** mode.
	Home	menu or parameter	Open top level menu: menu 1.

3. Editing in PROGRAM mode

- Navigate to the desired parameter.
- Press **RIGHT arrow** to open parameter view.
- Press **RIGHT arrow** again to open **Edit** mode. The current selection is highlighted. Scroll to a new selection.
- Press **RIGHT arrow** to accept it. The LCD returns to parameter view and displays the new selection.

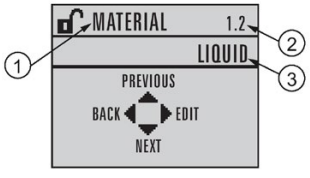

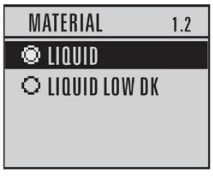

① Parameter name ② Parameter number ③ Current selection

4. Changing a numeric value

- Navigate to the desired parameter.
- Press **RIGHT arrow** to open parameter view. The current value is displayed.
- Press **RIGHT arrow** again to open **Edit** mode. The current value is highlighted.
- Key in a new value.
- Press **RIGHT arrow** to accept it. Press RIGHT arrow to accept it.The LCD returns to parameter view and displays the new selection.

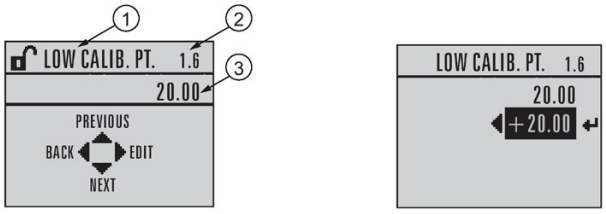

① Parameter name ② Parameter number ③ Current selection

Key functions in edit mode

Key	Name	Function	
	UP or **DOWN arrow**	Selecting options	Scrolls to item.
		Numeric editing	• Increments or decrements digits • Toggles plus and minus sign
	RIGHT arrow	Selecting options	• Accepts the data (writes the parameter) • Changes from **Edit** to **Navigation** mode
		Numeric editing	• Moves cursor one space to the right • or, with cursor on Enter sign, accepts the data and changes from **Edit** to **Navigation** mode
	LEFT arrow:	Selecting options	Cancels **Edit** mode without changing the parameter.
		Numeric editing	• Moves cursor to plus/minus sign if this is the first key pressed • or moves cursor one space to the left • or with cursor on the Enter sign, cancels the entry.
	Clear	Numeric editing	Erases the display.
	Decimal point	Numeric editing	• Enters a decimal point • Captures the current path [see **Secondary Value (4.11.)**]
	Plus or minus sign	Numeric editing	Changes the sign of the entered value.
	Numeral	Numeric editing	Enters the corresponding character.

6.2.3.2 Quick Start Wizard via the handheld programmer_note

Note

- A reset to factory defaults should be performed before running the Quick Start Wizard if the device has been used in a previous application. See **Master Reset (4.1.)**.
- The Quick Start wizard settings are inter-related and changes apply only after you select **Finish** in the Wizard Complete step.
- Do not use the Quick Start wizard to modify parameters: see instead Parameter reference (Page 125). (Perform customization for your application only after the Quick Start has been completed).
- Default settings in the parameter tables are indicated with an asterisk (*).

1. Quick Start

1.1. Quick Start Wiz

- Point the programmer at the display from a maximum distance of 300 mm (1 ft), then press **RIGHT arrow** to activate PROGRAM mode and open menu level 1.
- Press **RIGHT arrow** twice to navigate to menu item 1.1 and open parameter view.
- Press **RIGHT arrow** to open Edit mode or **DOWN arrow** to accept default values and move directly to the next item.
- To change a setting, scroll to the desired item or key in a new value.
- After modifying a value, press **RIGHT arrow** to accept it and press **DOWN arrow** to move to the next item.
- Quick Start settings take effect only after you select **Finish.**

Material

Selects the appropriate echo processing algorithms for the material [see **Position Detect (2.5.7.2.)** for more detail].

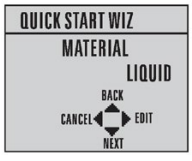

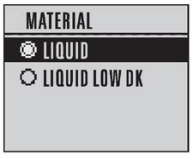

Options	*	LIQUID
		LIQUID LOW DK [a] (low dielectric liquid – CLEF algorithm enabled)

[a] dK < 3.0

Response rate

Sets the reaction speed of the device to measurement changes in the target range. Use a setting just faster than the maximum filling or emptying rate (whichever is greater).

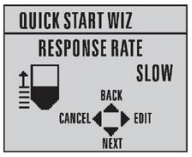

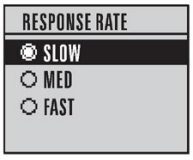

Options		Response rate (2.3.8.1.)	Fill rate per Minute (2.3.8.2.)/ Empty rate per Minute (2.3.8.3.)
	*	SLOW	0.1 m/min (0.32 ft/min)
		MED	1.0 m/min (3.28 ft/min)
		FAST	10.0 m/min (32.8 ft/min)

Units

Sensor measurement units.

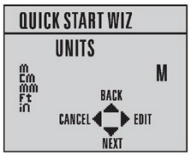

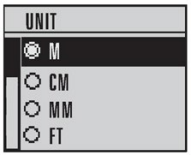

Options	m, cm, mm, ft, in Default: m

Operation

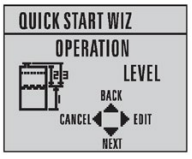

Operation		Description
NO SERVICE		Measurement and associated loop current are not updated, and the device defaults to Fail-safe mode [a].
LEVEL	*	Distance to material surface referenced from Low calibration point
SPACE		Distance to material surface referenced from High calibration point
DISTANCE		Distance to material surface referenced from Sensor reference point

[a] See **Material Level (2.3.5.)** for more detail.

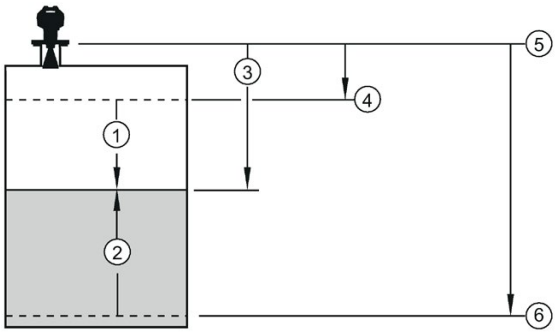

①	Space	④	High calibration point (process full level)
②	Level	⑤	Sensor reference point [a]
③	Distance	⑥	Low calibration point (process empty level)

[a] The point from which High and Low Calibration points are referenced: see **Dimension Drawings**.

Low calibration point

Distance from Sensor Reference to Low Calibration Point: usually process empty level. (See **Operation** for an illustration.)

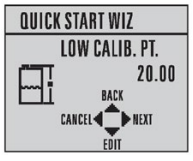

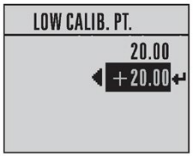

Values	Range: 0.00 to 20.00 m

High calibration point

Distance from Sensor Reference Point to High Calibration Point: usually process full level. (See **Operation** for an illustration.)

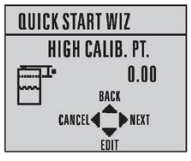

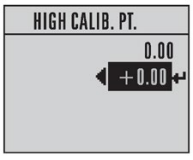

Values	Range: 0.00 to 20.00 m

Wizard complete

Options	BACK, CANCEL, FINISH (Display returns to 1.1 Quick Start Wiz menu when Quick Start is successfully completed.)

Press **DOWN arrow** ▼ **(Finish).** Then press **LEFT arrow** ◄ to return to **Measurement** mode. SITRANS LR250 is now ready to operate.

6.2.3.3 Auto False Echo Suppression

If you have a vessel with known obstructions, we recommend using Auto False Echo Suppression to prevent false echo detection. See **TVT (Auto False Echo Suppression) Setup (2.5.10.)** for instructions.

This feature can also be used if the display shows a false high level, or the reading is fluctuating between the correct level and a false high level.

6.2.3.4 Requesting an Echo Profile

- In **PROGRAM** mode, navigate to: **Level Meter > Diagnostics (3.) > Echo Profile (3.1**.)
- Press **RIGHT arrow** to request a profile.

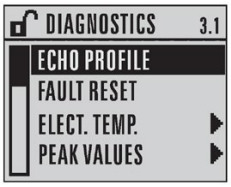

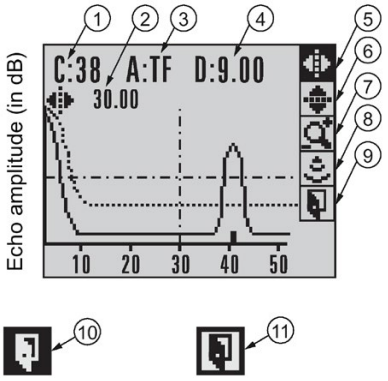

①	Confidence	⑦	Zoom
②	Distance from Low Calibration Point to vertical cross-hair	⑧	Measure
③	Algorithm: t**F** (trueFirst)	⑨	Exit
④	Distance from flange face to target	⑩	Exit icon selected
⑤	Pan left/right - selected	⑪	Exit icon deselected
⑥	Pan up/down		

- Use **UP** or **DOWN** **arrow** to scroll to an icon. When an icon is highlighted, that feature becomes active.
- To move a cross-hair, press **RIGHT** **arrow** to increase the value, **LEFT** **arrow** to decrease.
- To Zoom into an area, position the intersection of the cross-hairs at the center of that area, select **Zoom**, and press **RIGHT** **arrow.** Press **LEFT** **arrow** to Zoom out.
- To update the profile, select **Measure** and press **RIGHT** **arrow.**
- To return to the previous menu, select **Exit** then press **RIGHT** **arrow.**

6.2.3.5 Device Address

Note

The address can only be changed from a remote master such as NI-FBUS Configurator or DeltaV. See Addressing in manual Foundation Fieldbus for Level Instruments (7ML19985MP01) for further details.

Read only. The unique address of the device on the network.

Values	Temporary range during initial commissioning: 248 - 251. Permanent range after commissioning complete (written to non-volatile memory in the device): 16-247

- In PROGRAM mode, navigate to: **Level Meter > Communication (5.) > Device Address (5.2.)** to view the device address.
- Press **Mode** to return to Measurement mode.

6.3 Application examples

Note

In the applications illustrated below, values are for example purposes only.

You can use these examples as setup references. Enter the values in the parameter tables to select the corresponding functions.

Configure the basic settings using the Quick Start wizard parameters. (These parameters are inter-related, and changes take effect only after you select **FINISH** in final step: Wizard Complete.)

In each example, after performing a Quick Start, navigate to the other required parameters (either via the handheld programmer or via AMS Device Manager) and enter the appropriate values.

6.3.1 Liquid resin in storage vessel, level measurement

Note

Minimum distance from flange face to target is limited by **Near Range (2.5.1.)**.

To obtain level measurement/4 to 20 mA output proportional to resin levels:

- Low Calibration Pt. = 5 m (16.5 ft) from sensor reference point
- High Calibration Pt.= 0.5 m (1.64 ft) from sensor reference point
- Max.fill/empty rate = 0.2 m/min (0.65 ft/min)

In the event of a loss of echo:

- SITRANS LR250 is to go into Fail-safe High after 2 minutes.

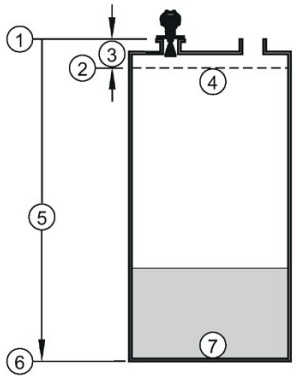

① Sensor reference point
② High calibration point
③ 0.5 m
④ 100% level
⑤ 5 m
⑥ Low calibration point
⑦ 0% level

Parameter type	Parameter No. /Name	Options/ Values	Function
Quick Start Wizard parameters	Introduction	**NEXT**	Continue with Wizard.
	Language	**NEXT**	Continue with current language.
	Material	**LIQUID**	
	Response Rate	**MED**	Medium =1 m/minute
	Units	**M**	meters
	Low Calibration Point	**5**	5 m (16.4 ft)
	High Calibration Point	**0.5**	0.5 m (1.64 ft)
	Wizard Complete	**FINISH**	Transfers Quick Start settings to device.
Independent parameters	Loss of Echo (LOE) Timer (2.3.6.)	**120**	120 seconds

Return to **Measurement**: press **Mode** to start normal operation.

6.3.2 Horizontal vessel with volume measurement

Note

The minimum distance from the flange face to the target is limited by **Near Range (2.5.1.)**.

To obtain level measurement proportional to vessel volume in a chemical vessel:

- Low Calibration Point = 3.5 m (11.48 ft) from sensor reference point
- High Calibration Point = 0.5 m (1.64 ft) from sensor reference point
- Max. fill/empty rate = 0.2 m/min (0.65 ft/min)
- Select vessel shape, Parabolic Ends, and enter values for A and L, to obtain a volume reading instead of level.

In the event of a loss of echo:

- SITRANS LR250 is to report a status of BAD or UNCERTAIN after 120 seconds (2 minutes).

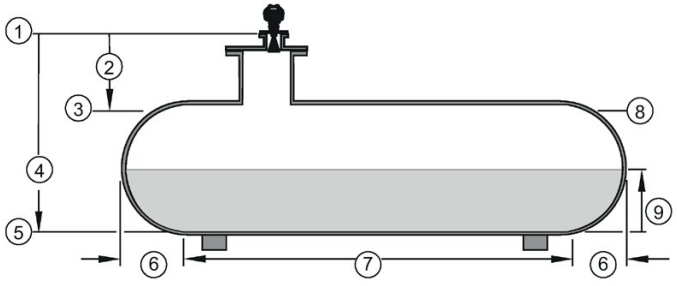

①	Sensor reference point	⑥	A = 0.8 m
②	0.5 m	⑦	L = 6 m
③	High calibration point	⑧	100% = 8000 L
④	3.5. m	⑨	Volume reading
⑤	Low calibration point		

Parameter type	Parameter Name	Options/ Values	Function
Quick Start Wizard parameters	Introduction	**NEXT**	Continue with Wizard.
	Language	**NEXT**	Continue with current language.
	Material	**LIQUID**	
	Response Rate	**MED**	Medium =1 m/minute
	Units	**M**	meters
	Low Calibration Point	**3.5**	3.5 m (11.48 ft)
	High Calibration Point	**0.5**	0.5 m (1.64 ft)
	Wizard Complete	**FINISH**	Transfers Quick Start settings to device.
Independent parameters	Vessel Shape (2.4.1.1.)	**PARABOLIC ENDS**	Defines vessel shape.
	PV (volume/level) Units (2.3.3.)	**L**	liters
	Level Unit (2.3.2.)	**M**	meters
	Maximum Volume (2.4.1.2.)	**8000**	8000 liters
	Dimension A (2.4.1.3.)	**0.8**	0.8 m (2.62 ft)
	Dimension L (2.4.1.4.)	**6**	6 m (19.68 ft)
	Loss of Echo (LOE) Timer (2.3.6.)	**120**	120 seconds

Return to **Measurement:** press **Mode** to start normal operation.

6.3.3 Application with stillpipe

A stillpipe is recommended for products with a dK of less than 3, or if extremely turbulent or vortex conditions exist. This mounting arrangement can also be used to provide optimum signal conditions on foaming materials.

Note

- **Near Range (2.5.1.)** (Blanking) will be set at the factory. Check the process connection tag for specific values.
- Suitable pipe diameters are 40 mm (1.5") to 100 mm (4").
- The pipe diameter must be matched with the antenna size. Use the largest antenna size that will fit the stillpipe/bypass pipe. See Dimension drawings (Page 195).
- See Mounting on a Stillpipe or Bypass Pipe (Page 30) for installation guidelines.

This application is to obtain a level measurement and corresponding 4 to 20 mA output proportional to the oil level in a fuel storage vessel.

- Low Calibration Pt. is 5 m (16.4 ft) from the sensor reference point.
- High Calibration Pt. is 0.5 m (1.64 ft) from the sensor reference point.
- The stillpipe inside diameter is 50 mm (1.96").
- The maximum rate of filling or emptying is about 0.1 m (4")/min.

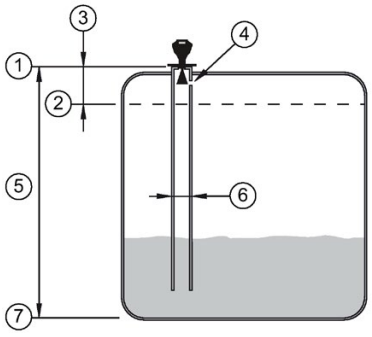

① Sensor reference point
② High calibration point
③ 0.5 m
④ Vent hole
⑤ 5 m
⑥ 50 mm I.D.
⑦ Low calibration point

Parameter type	Parameter No./Name	Options/Values	Function
Quick Start Wizard parameters	Introduction	**NEXT**	Continue with Wizard.
	Language	**NEXT**	Continue with current language.
	Material	**LIQUID LOW DK**	
	Response Rate	**MED**	Medium =1 m/minute
	Units	**M**	meters
	Operating mode	**LEVEL**	Level is reported as Volume when a vessel shape is selected.
	Low Calibration Point	**5**	5 m (16.4 ft)
	High Calibration Point	**0.5**	0.5 m (1.64 ft)
	Wizard Complete	**FINISH**	Transfers Quick Start settings to device.
Independent parameters	Propagation Factor (2.5.3.)[a)]	**0.988**	P.F. for a 50 mm (1.96") I.D. stillpipe
	Position Detect (2.5.7.2.)	**HYBRID**	
	CLEF Range (2.5.7.4.)[a)]	4.3	Low calibration point - 0.7 m = 4.3 m (14.1 ft)

a) The recommended values for the propagation factor and for CLEF range are dependent on the stillpipe diameter. See Propagation Factor/Stillpipe Diameter for values.

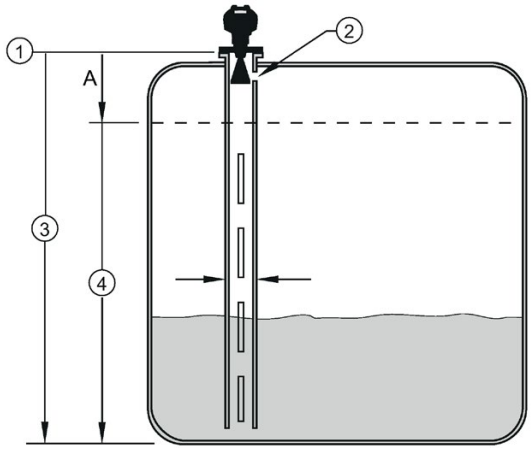

① sensor reference point
② air gap
③ low calibration point
④ CLEF range 2.5.7.4.

A 700 or 1000 mm (see CLEF Range settings in table below)

Propagation Factor/Stillpipe Diameter

Values	Range	0.3 to 1.0 depending on pipe size		
	Default	1.0000		
Nominal Pipe Size [a]	40 mm (1.5")	50 mm (2")	80 mm (3")	100 mm (4")
Propagation Factor	0.9844	0.988	0.9935	0.9965
CLEF Range (2.5.7.4.) settings	Low calibration point - 700 mm (2.29 ft)[b]	Low calibration point - 700 mm (2.29 ft)[b]	Low calibration point - 1000 mm (3.28 ft)[b]	Low calibration point - 1000 mm (3.28 ft)[b]

[a] Since pipe dimensions may vary slightly, the propagation factor may also vary.

[b] CLEF range covers the whole measurement range except first 700 or 1000 mm from sensor reference point

Note

Flanged and Hygienic encapsulated antenna

For Flanged encapsulated antenna (7ML5432) and Hygienic encapsulated antenna (7ML5433) match the process connection size to the pipe diameter. For example, DN 80/3" flange to DN 80/3" pipe.

Remote operation

7

7.1 Operating via AMS Device Manager

AMS Device Manager is a software package that monitors the process values, alarms and status signals of the device. Please consult the operating instructions or online help for details on using AMS Device Manager. You can find more information at:

Emerson (http://www.emersonprocess.com/AMS/)

7.1.1 Functions in AMS Device Manager

Note

Do not use the handheld programmer at the same time as AMS Device Manager, or erratic operation may result. To disable operation via the handheld programmer, see **Local Operation (6.2.3.).**

AMS Device Manager can be used to monitor the process values, alarms and status signals of the device. It allows you to display, compare, adjust, verify, and simulate process device data.

Configuration and monitoring of the device is completed via parameters organized into three main function groups:

- Configure/Setup
- Device Diagnostics (read only)
- Process Variables (read only)

Each function group is further divided into four blocks:

- Level Transducer Block (LTB)
- Liquid Crystal Display Block (LCD)
- Diagnostic Block (DIAG)
- Resource Block (RESOURCE)

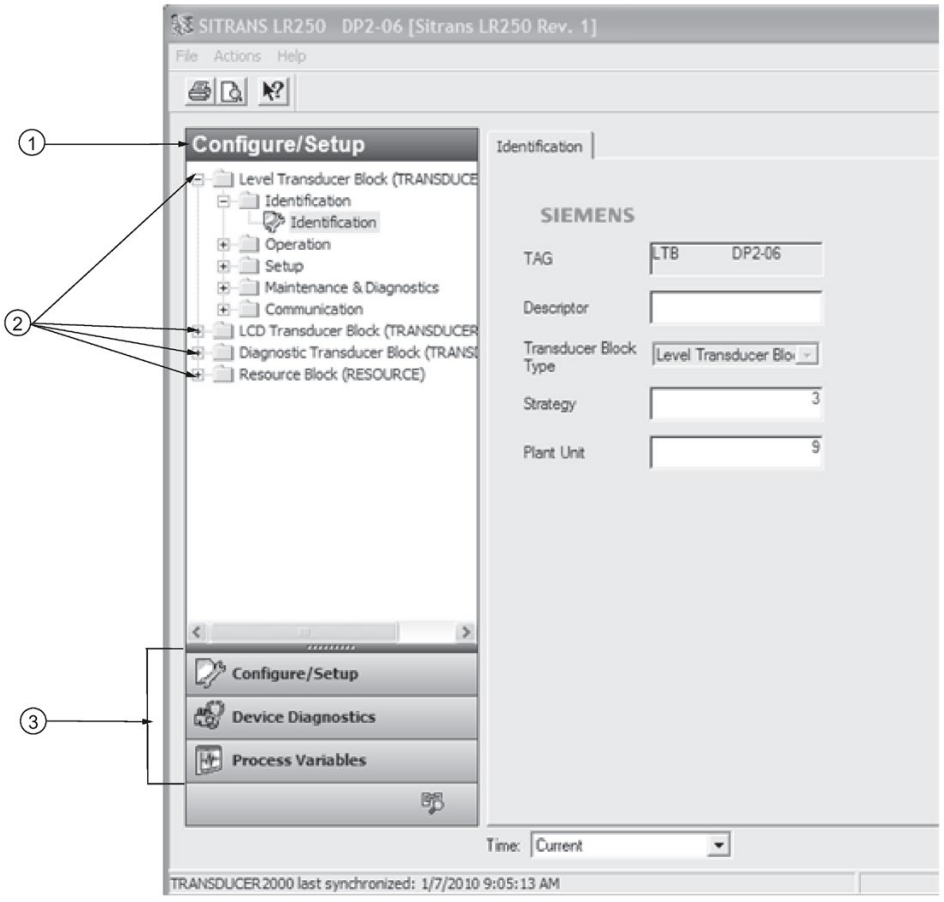

① Active function group
② Blocks within each function group
③ Functions groups available

In general, process parameters are accessed through the Level Transducer Block, and device parameters are accessed through the Resource Block.

See AMS Menu Structure (Page 113) for a chart, and Changing parameter settings using AMS Device Manager (Page 78) for more details.

7.1.2 Key features of AMS Device Manager Rev. 9.0

The graphic interface in the radar device makes monitoring and adjustments easy.

CONFIGURE/SETUP function group		
Block	**Feature**	**Function**
LTB	Echo Profile (Page 88)	Echo profile viewing
LTB	TVT (time varying threshold) (Page 86)	Screen out false echoes
LTB	Linearization (LTB) (Page 83)	Volume measurement in an irregular vessel
LTB	Maintenance & Diagnostics (LTB) (Page 89)	Set schedules and reminders for sensor maintenance and service
RESOURCE	Quick Start Wizard via AMS Device Manager (Page 75)	Device configuration for simple applications
RESOURCE	Maintenance & Diagnostics (RESOURCE) (Page 100)	Set schedules and reminders for device maintenance and calibration
RESOURCE	Security (RESOURCE) (Page 103)	Protect security and communication parameters from modification by the maintenance user

DEVICE DIAGNOSTICS function group		
Block	**Feature**	**Function**
LTB	Alarms & Errors (LTB) (Page 103)	Monitor process errors and alarms
RESOURCE	Alarms & Errors (RESOURCE) (Page 107)	Monitor device errors and alarms

PROCESS VARIABLES function group		
Block	**Feature**	**Function**
LTB	Process Variables (Level Transducer Block-LTB) (Page 110)	Monitor process variables and level trend

7.1.2.1 Pull-down menu access

① Action menu items

A pull-down menu under **Actions** gives alternative access to several features.

7.1.3 Adding a new device

7.1.3.1 Electronic Device Description (EDD)

Note

SITRANS LR250 requires the EDD for AMS Device Manager version 9.0.

Check the product page of our website at: www.siemens.com/LR250 (http://www.siemens.com/LR250), under **Downloads**, for the latest version of EDD: SITRANS LR250 FF - Foundation Fieldbus - AMS V9.0.

1. Check that you have the latest version of the EDD for AMS Device Manager that matches the firmware revision of your device. See **Firmware Revision (2.2.2.)**, and if necessary download it from the product page listed above. Save the files to your computer, and extract the zipped file to an easily accessed location.
2. Launch **AMS Device Manager – Add Device Type**, browse to the unzipped EDD file and select it.
3. The device is shipped with a unique tag, consisting of a manufacturer id and serial number. The device tag can only be read from the device. It is not necessary to change the device tag to make the device operational, however if you wish to change it, use AMS Device Manager.

Set Device Tag via AMS Device Manager:

1. Launch **AMS Device Manager – AMS Device Manager**.
2. From the Device Connection View, right click on the FF Network icon and select **Rebuild Hierarchy**.
3. Right click on the device icon, and choose **Rename** from the menu.
4. Enter a device tag and press **Enter**.

Note

The Device Tag described above is separate from the Tag that describes each block type (as shown in the Identification folder of each block).

Startup

1. Launch **AMS Device Manager – AMS Device Manager**. (If AMS already running, go to step 4.
2. From the Device Connection View, right click on the FF Network icon and select **Rebuild Hierarchy**.
3. Double-click the device icon to open the startup screen. The startup screen shows device identification details, and a navigation window on the left-hand side of the screen. (The Block Status will show Out of Service at initial startup.)

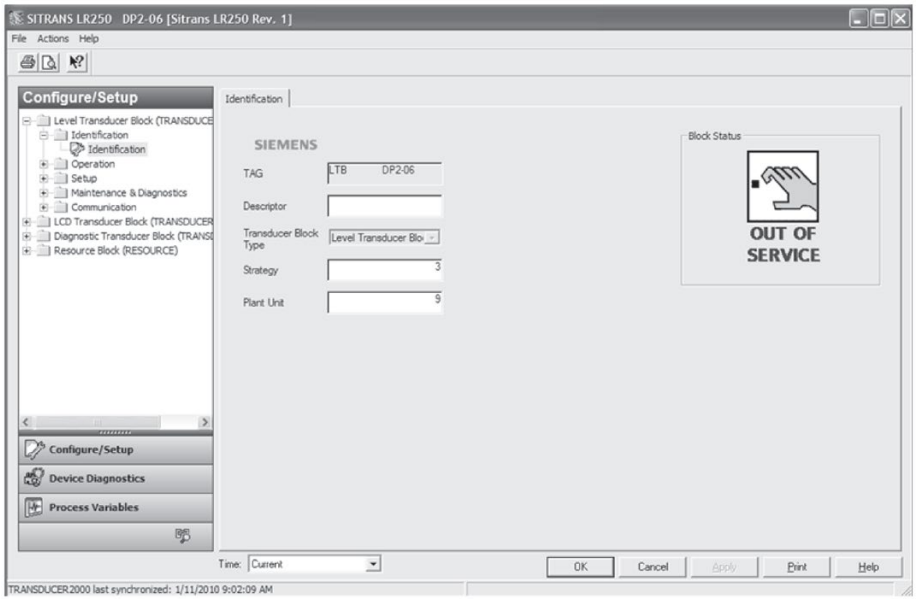

4. Next, complete a master reset.

7.1.4 Master Reset

A master reset is recommended before first configuring a new device. (Block Status must be Out of Service to perform a Master Reset.)

1. Navigate to **Configure/Setup > Resource > Operation > Methods** and click to open the dialog window.
2. In the **General** field, click on **Master Reset** and click Next to perform reset to factory defaults. Click Next to accept default reset to **Factory Defaults**.

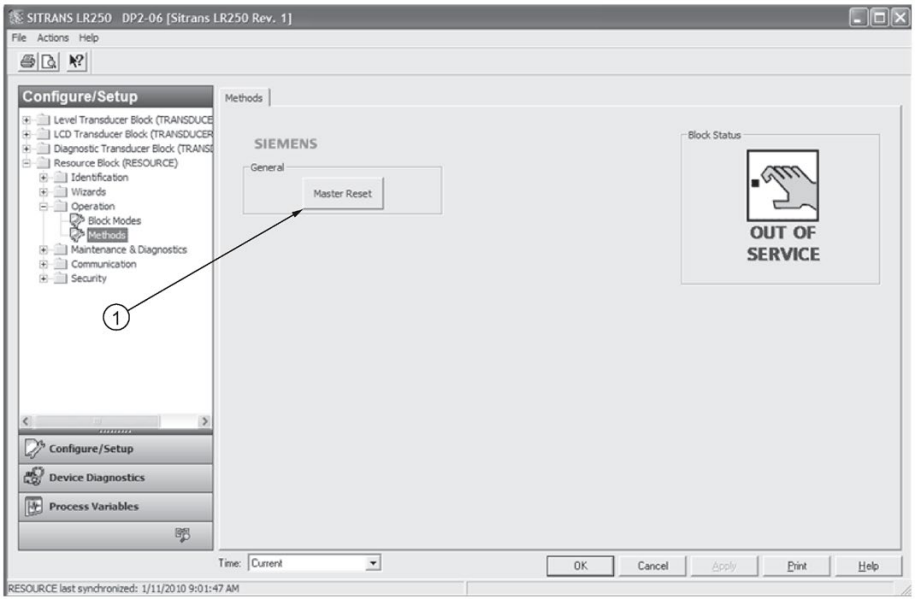

① Master Reset

3. Click FINISH then restart AMS to reload settings. Next, scan the device.

7.1.5 Scan Device

Scan Device uploads parameters from the device (synchronizes parameters) to AMS Device Manager.

1. Open the pull-down menu **Actions – Scan Device** (upload parameters from the device to AMS).
2. The next step when adding a new device is to configure and calibrate the device via the Quick Start Wizard.

7.1.6 Sensor calibration

The LR250 FF does not need to be calibrated, only configured using the Quick Start Wizard below.

7.1.7 Configuring a new device

Configure a new device using the Quick Start Wizard, found in the **Resource Block** of the function group **Configure/Setup**.

7.1.7.1 Quick Start Wizard via AMS Device Manager

The Quick Start Wizard groups together all the settings you need to configure a device for most applications.

Please consult the operating instructions or online help for details on using AMS Device Manager.

Note

Use Quick Start Wizard via AMS Device Manager for initial configuration of a device on an FF network. If device is not on an FF network, initial configuration should be completed via the Quick Start Wizard from the LUI. [See Quick Start Wizard via the handheld programmer (Page 58).]

Quick Start Wizard steps

Note

- Complete the steps in order. Click on **Apply** after revising parameters in each step, or **CANCEL** to exit step without saving changes. (Note: **Apply** will write changes to the device. **OK** will write changes to the device and exit to the Device Connection View. **CANCEL** will exit to the Device Connection View without applying changes.)
- Do not use the Quick Start Wizard to modify individual parameters: see instead Changing parameter settings using AMS Device Manager (Page 78). (Perform customization only after the Quick Start has been completed.)
- Values set using the Quick Start Wizard via AMS Device Manager are saved and recalled each time it is initiated (unlike the Quick Start Wizard initiated via the handheld programmer).
- To run the Quick Start Wizard for this device, the RESOURCE block must first be set to Out of Service (OOS) mode, before any configuration changes (changes to parameters affecting block output) can be written. (Setting RESOURCE block to OOS also sets LTB to OOS.)
- After completing steps 1-4, review all settings in Step 5 - Summary. Return to steps1-4 if further changes are required.
- After completing the Quick Start Wizard from AMS, you must manually place the RESOURCE block in Automatic mode.

Launch **AMS Device Manager** and double-click the device icon from the Device Connection View to open the startup screen. Navigate to **Configure/Setup > Resource Block > Wizards > Quick Start**, and click on **Step 1 - Identification**.

Step 1 - Identification

You can accept the default values without modification. (Descriptor, Message, and Installation **Date** fields can be left blank.) If desired, make changes then click on **Apply**. (The **Apply** button is activated when a parameter is modified.) Go to Step 2.

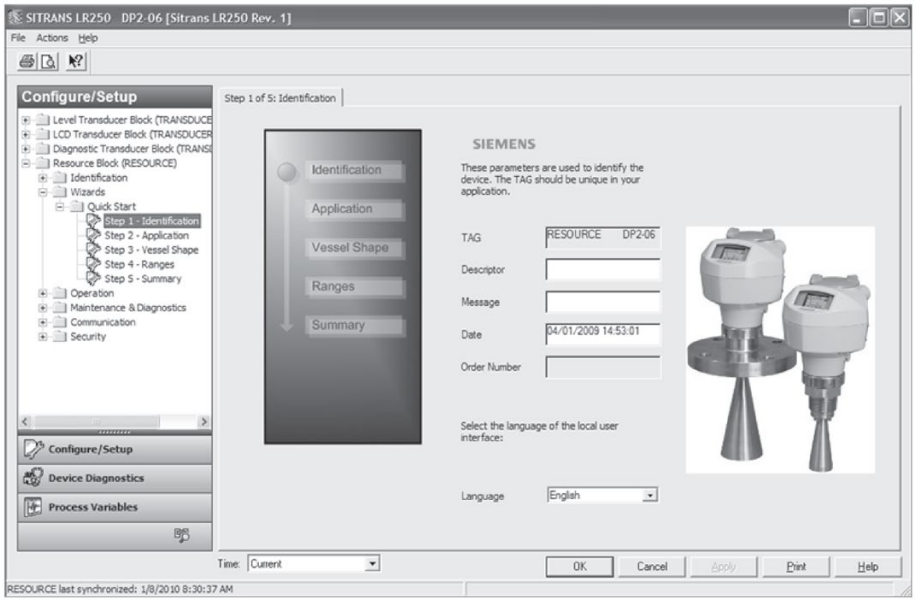

Step 2 - Application Type

Click on **Step 2 - Application Type** in the navigation window. Select the Application Type (level or volume), Propagation Factor (if using a stillpipe application), and the Material. For a Low Dielectric Liquid application in a stilling well, see example Application with Stillpipe. Click on **Apply** to save settings then go to Step 3.

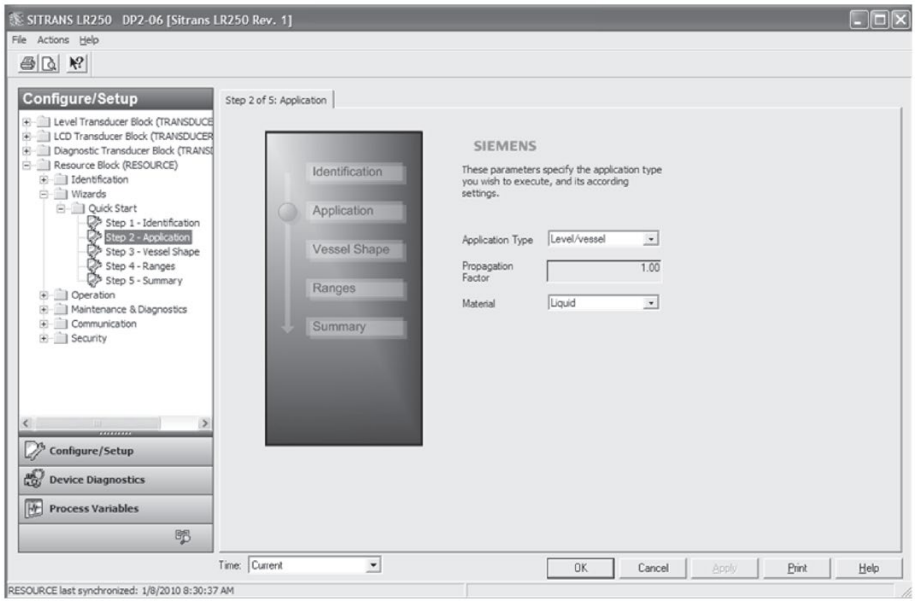

Step 3 - Vessel Shape

Click on **Step 3 - Vessel Shape** in the navigation window. Select the vessel shape. To describe a more complex shape, select **Linearization Table** in the Vessel Shape field and see Linearization (LTB) (Page 83) for more details. Click on **Apply** to save settings then go to Step 4.

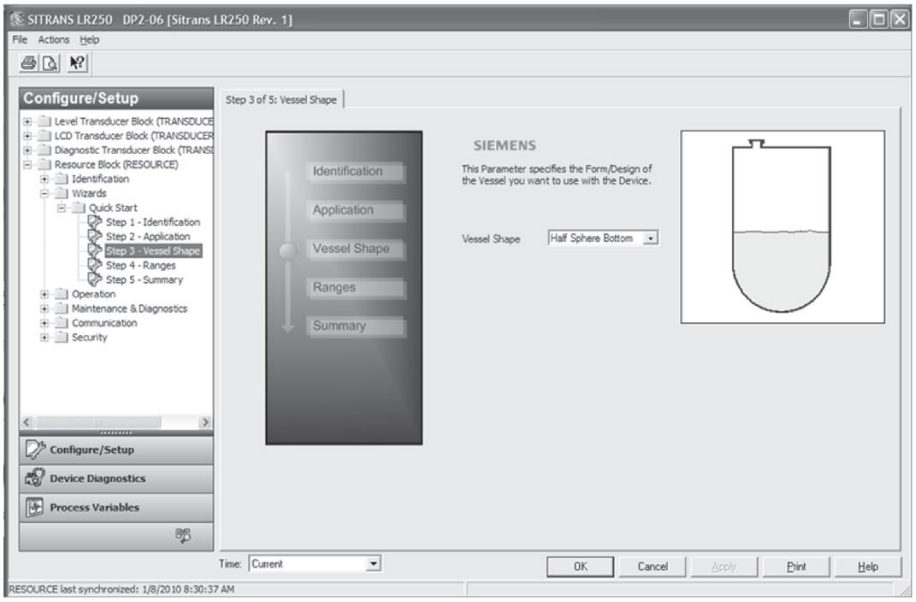

Step 4 - Ranges

Click on **Step 4 - Ranges** in the navigation window. On the tab Step 4 of 5 Ranges: set the parameters, and click on **Apply** to save settings. If necessary, click on the Breakpoints tab, set the parameters, and click on **Apply** to save settings. Go to Step 5.

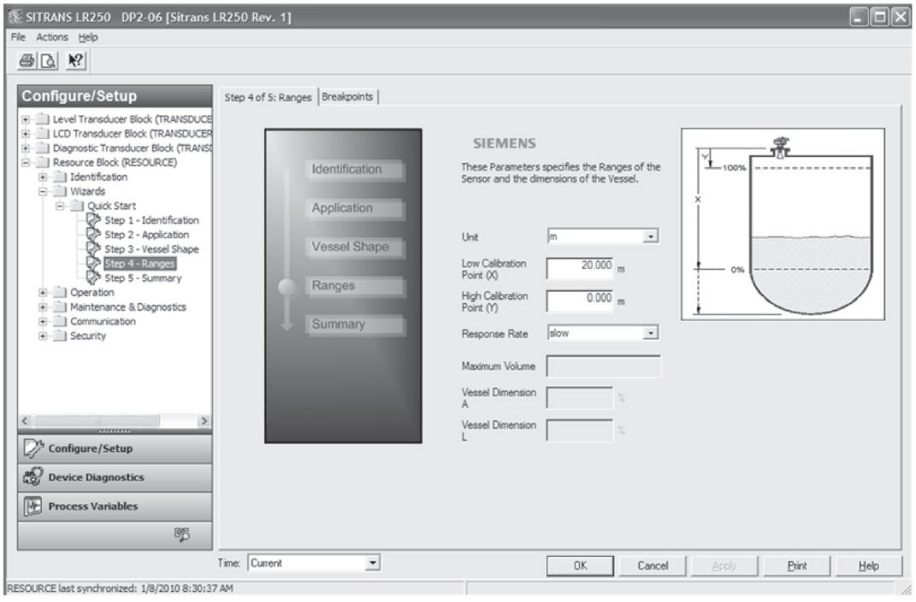

Step 5 - Summary

Click on **Step 5 - Summary** in the navigation window. Check parameter settings. Return to individual steps if further changes are necessary.

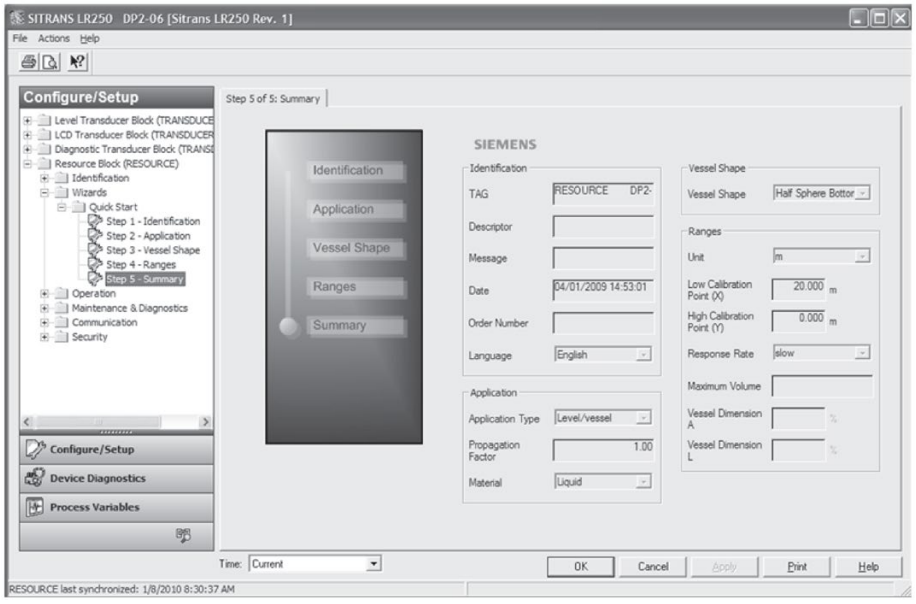

The Quick Start Wizard is now complete.

7.1.8 Changing parameter settings using AMS Device Manager

Note

- For a complete list of parameters, see Parameter Reference (Page 125).
- For more detailed explanations of the parameters listed below see the pages referenced.

1. Adjust parameter values in the parameter value field in **Configure/Setup** view, then click on **Apply** to write the new values to the device. The parameter field will display in yellow until the value has been written to the device.
2. Click on **OK** only if you wish to update all parameters and exit device view.

7.1.9 Configure/Setup (Level Transducer Block-LTB)

7.1.9.1 Identification (LTB)

Navigate to **Configure/Setup > LTB > Identification**.

Identification:

- TAG: Read only. Description for the associated block: device tag prefixed by block type.
- Descriptor [see **Descriptor (2.1.2.)**]
- Transducer Block Type: Read only. Identifies the type of transducer block.
- Strategy: Used to identify grouping of blocks.
- Plant Unit: The identification number of the plant unit. For example, can be used in the host for sorting alarms.

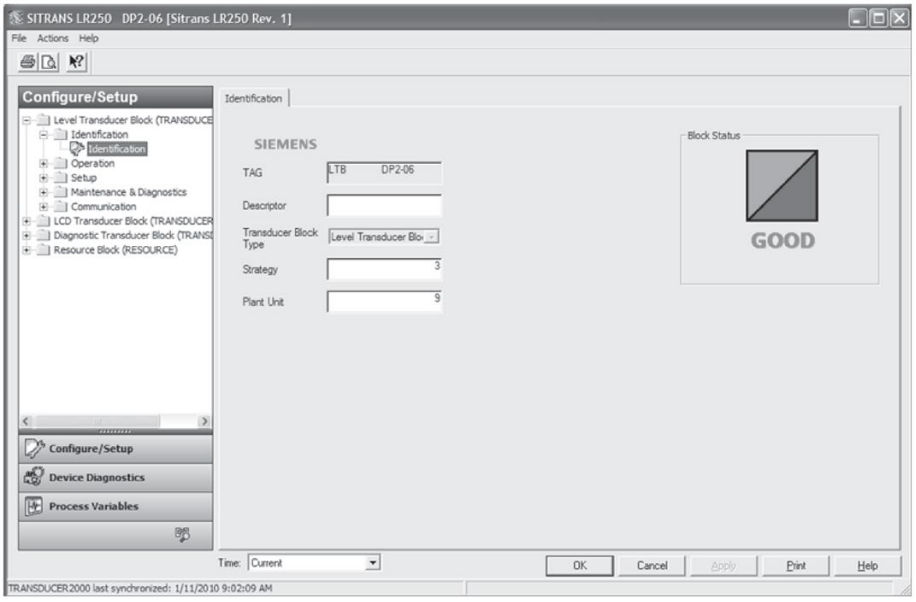

7.1.9.2 Operation (LTB)

Navigate to **Configure/Setup > LTB > Operation**.

Click on Block Modes to open the dialog window for access to:

Block Modes:

- Actual Mode: This is the current mode of the block, which may differ from the target based on operating conditions. Its value is calculated as part of the block execution.
- Target Mode [see **Mode (2.6.2.)**]
- Permitted Mode: Defines the modes that are allowed for an instance of the block. The permitted mode is configured based on application requirements.
- Normal Mode: This is the mode that the block should be set to during normal operating conditions.

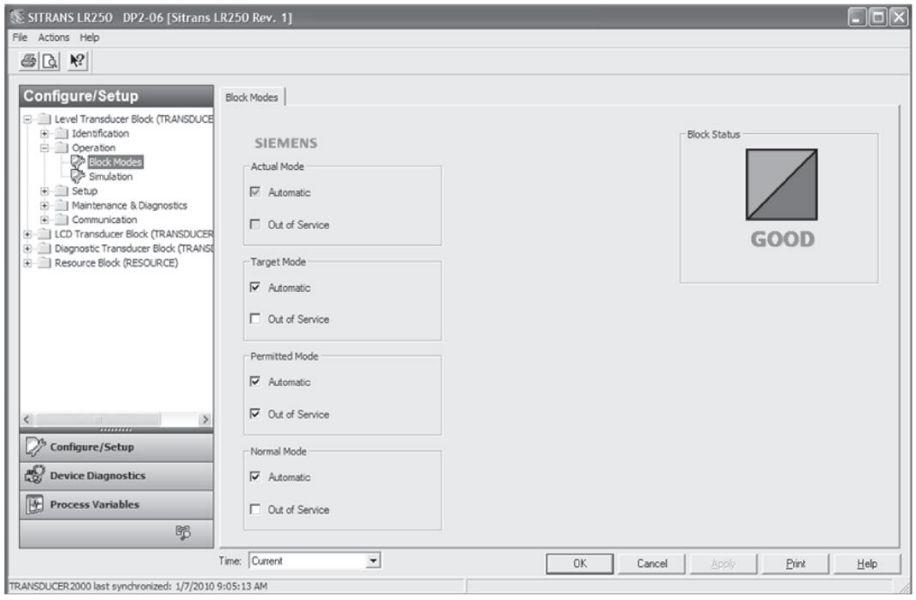

Click on **Simulation** to open the dialog window for access to:

Simulation (Input)

Allows you to simulate the sensor value which is input to the Level Transducer Block. This tests everything between the Level Transducer Block and Output.

Note

To activate simulation via AMS Device Manager or the 375 Field Communicator, simulation must also be set to Enabled on the device. See **Simulate Enable (4.12.)**.

- Simulation
- Simulation Value
- RAMP start
- RAMP end
- RAMP No of steps
- RAMP steplength

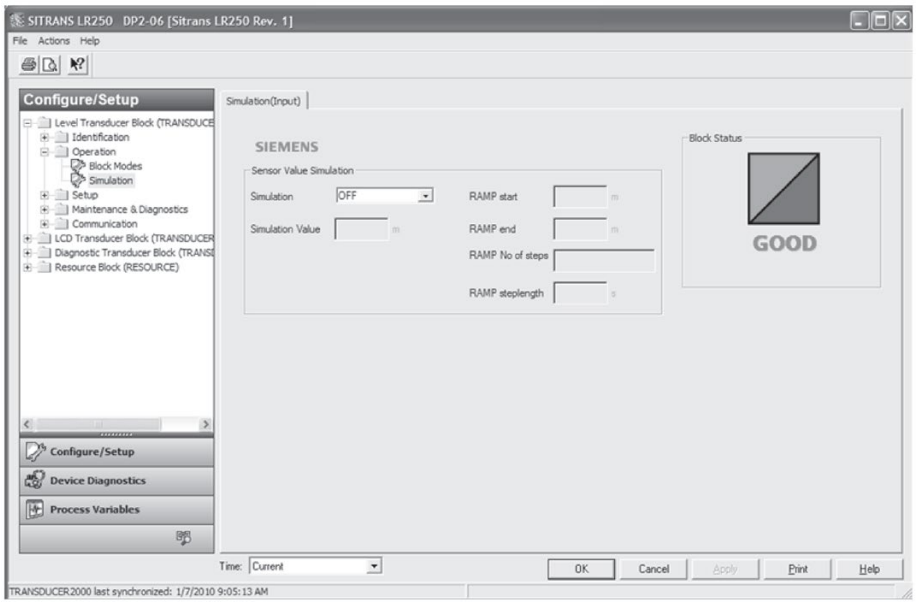

1. To enable simulation select **Fixed value** or **Ramp** in the Simulation field.
2. If you select Fixed value, enter a Simulation Value.
3. If you select Ramp, enter the ramp start, end, number of steps, and steplength.
4. Click **Apply**.
5. After simulation is complete, set Simulation to **OFF** and click **Apply**.

7.1.9.3 Setup (LTB)

Sensor (LTB)

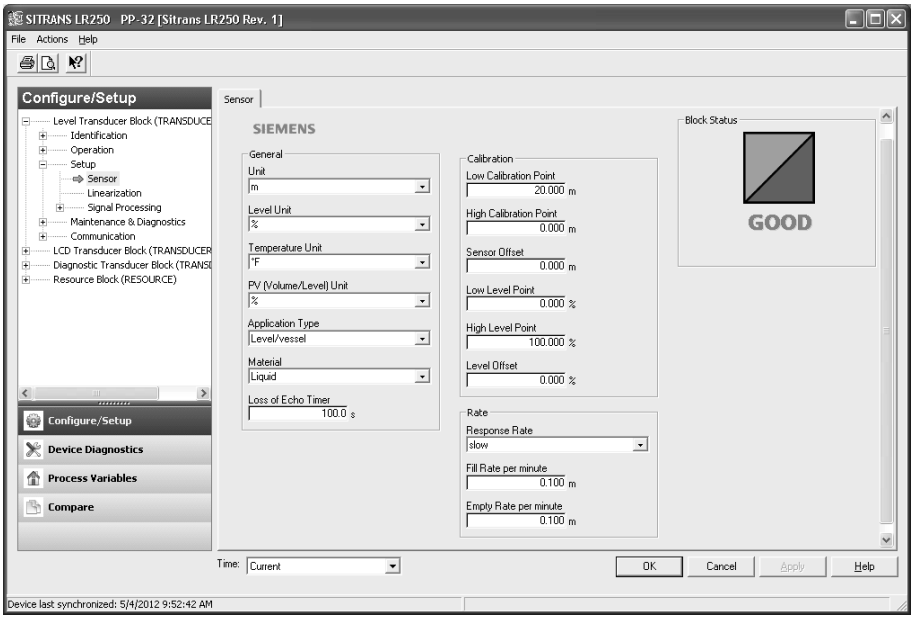

Navigate to **Configure/Setup > LTB > Setup** and click on **Sensor** for access to:

General

[see **Sensor (2.3.)** for details]

- Unit [see **Unit (2.3.1.)**]
- Level Unit [see **Level Unit (2.3.2.)**]
- Temperature Unit [see **Temperature Units (2.3.4.)**]
- PV (Volume/Level) Unit [see **PV (volume/level) Units (2.3.3.)**]
- Application Type (available only via AMS Device Manager)

Defines the application type.

Values	Level/vessel (default)
	Level/stillpipe
	Level/bypass pipe
	Volume/vessel
	Volume/stillpipe
	Volume/bypass pipe

- Material [see **Material (2.3.5.)**]
- Loss of Echo Timer (see **Loss of Echo (LOE) Timer (2.3.6.)**]

Calibration

[see **Calibration (2.3.7.)** for details]

- Low Calibration Point [see **Low Calibration Point (2.3.7.1.)**]
- High Calibration Point [see **High Calibration Point 2.3.7.2.)**]
- Sensor Offset [see **Sensor Offset (2.3.7.3.)**]
- Low Level Point [see **Low Level Point (2.3.7.4.)**]
- High Level Point [see **High Level Point (2.3.7.5)**]
- Level Offset [see **Level Offset (2.3.7.6.)**]

Rate

[see **Rate (2.3.8.)**]

- Response Rate [see **Response Rate (2.3.8.1.)**]
- Fill Rate per Minute [see **Fill Rate per Minute (2.3.8.2.)**]
- Empty Rate per Minute [see **Empty Rate per Minute (2.3.8.3.)**]

7.1.9.4 Linearization (LTB)

You can use the linearization feature to define a more complex vessel shape and enter up to 32 level breakpoints where the corresponding volume is known. See **Linearization (2.4.)**.

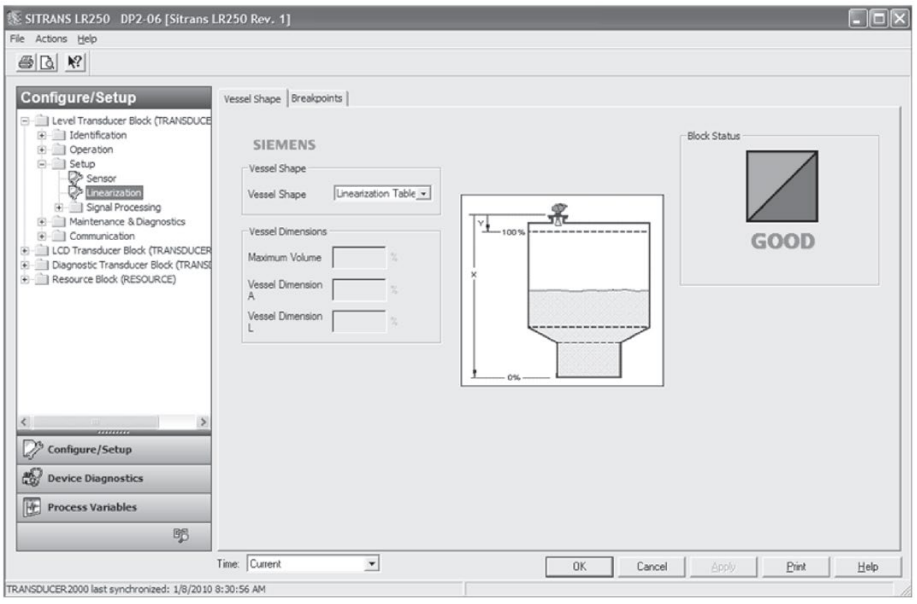

Navigate to **Configure/Setup > LTB > Setup > Linearization** and click on **Linearization**. Click on the Vessel Shape tab to access the parameters listed:

Vessel Shape

- Vessel Shape [see **Vessel Shape (2.4.1.1.)**]

Vessel Dimensions

- Maximum Volume [see **Maximum Volume (2.4.1.2.)**]
- Vessel Dimension A [see **Dimension A (2.4.1.3.)**]
- Vessel Dimension L [see **Dimension L (2.4.1.4.)**]

OR

Click on **Breakpoints** tab for access to level and volume breakpoints.

Note

This parameter becomes accessible only after **Linearization Table** has been selected in **Vessel Shape** above.

Level and Volume Breakpoints [see XY Index (2.4.1.5.)]

- Level 1 .... Level 32
- Volume 1 ... Volume 32
- Vessel Shape

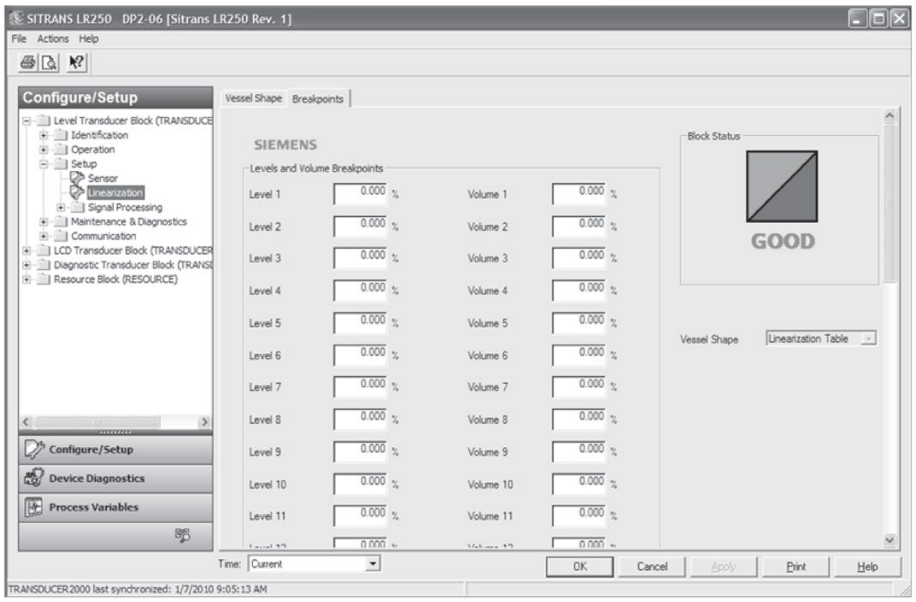

1. The default for level values is percent: if you want to select units instead, go to **Configure/Setup > LTB > Setup > Sensor > Level Unit**, and select the desired unit.
2. Go to **Configure/Setup > LTB > Setup > Sensor > PV (Volume/Level) Unit**, and select the desired volume units.
3. From the Vessel Shape tab of **Configure/Setup > LTB > Setup > Linearization**, select **Linearization Table** option in the Vessel Shape field.
4. Click on the Breakpoints tab and enter values for level and volume breakpoints in table.

The values corresponding to 100% and 0% levels must be entered. The breakpoints can be ordered from top to bottom, or the reverse.

After completing the above steps you will need to configure AIFB 1 and/or AIFB 2. [See **AIFB 1 (2.6.)** and **AIFB 2 (2.7.)**]

7.1.9.5 Signal processing

Signal Processing (LTB)

Note

For more detailed explanations of the parameters listed below see the pages referenced.

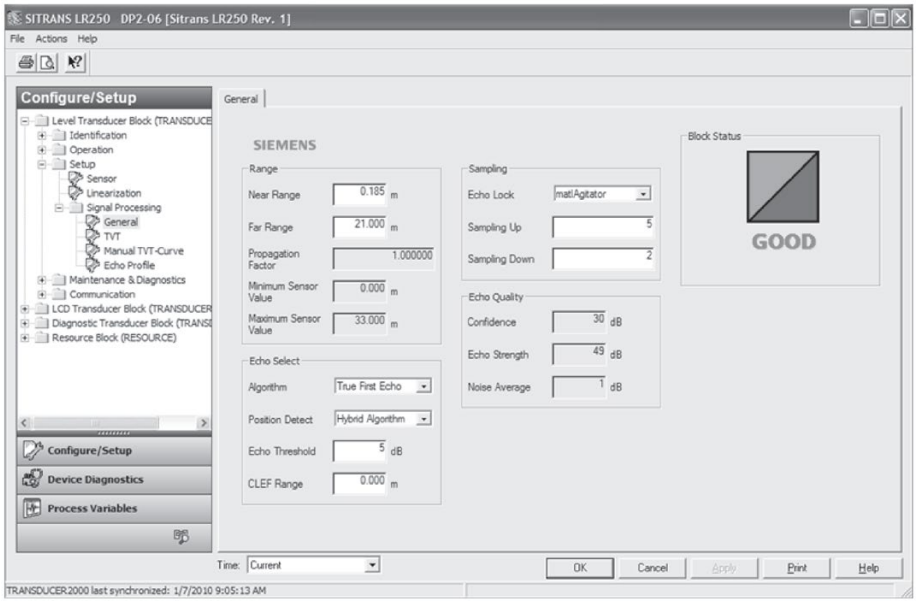

General

Navigate to **Configure/Setup > LTB > Setup > Signal Processing** and click on General for access to:

Range

[see **Signal Processing (2.5.)**]

- Near Range [see **Near Range (2.5.1.)**]
- Far Range [see **Far Range (2.5.2.)**]
- Propogation Factor [see **Propogation Factor (2.5.3.)**]
- Minimum Sensor Value [see **Minimum Sensor Value (2.5.4.)**]
- Maximum Sensor Value [see **Maximum Sensor Value (2.5.5.)**]

Echo Select

[see **Echo Select (2.5.7.)**]

- Algorithm [see **Algorithm (2.5.7.1.)**]
- Position Detect [see **Position Detect (2.5.7.2.)**]
- Echo Threshold [see **Echo Threshold (2.5.7.3.)**]
- CLEF Range [see **CLEF (Contrained Leading Edge Fit) Range (2.5.7.4.)**]

Sampling

[see **Sampling (2.5.8.)**]

- Echo Lock [see **Echo Lock (2.5.8.1.)**]
- Sampling Up [see **Up Sampling (2.5.8.2.)**]
- Sampling Down [see **Down Sampling (2.5.8.3.)**]

Echo Quality

[see **Echo Quality (2.5.9.)**]

- Confidence [see **Confidence (2.5.9.1.)**]
- Echo Strength [see **Echo Strength (2.5.9.2.)**]
- Noise Average

  Displays the average ambient noise (in dB above 1 µV rms) of a noise profile. Noise level is a combination of transient noise and receiving circuitry. After a measurement, the values from the previous noise shot will be displayed.

TVT (time varying threshold)

A time-varying curve that determines the threshold level above which echoes are determined to be valid.

Modify the TVT to screen out false echoes [see Time Varying Threshold (TVT) (Page 240), and **Auto False Echo Suppression (2.5.10.1.)**].

Navigate to **Configure/Setup > LTB > Setup > Signal Processing** and click on **TVT**. Click on one of the two tabs to access the parameters listed:

TVT Setup

- Auto False Echo Suppression [see **Auto False Echo Suppression (2.5.10.1.)**]
- Auto False Echo Suppression Range [see **Auto False Echo Suppression Range (2.5.10.2.)**]
- Hover Level [see **Hover Level (2.5.10.3.)**]
- Shaper Mode [see **Shaper Mode (2.5.10.4.)**]

Auto False Echo Suppression

1. Determine Auto False Echo Suppression Range. Measure the actual distance from the sensor reference point to the material surface using a rope or tape measure.
2. Subtract 0.5 m (20") from this distance, and use the resulting value.
3. Open the menu **Configure/Setup > LTB > Setup > Signal Processing > TVT** and set Auto False Echo Suppression Range.
4. From the same menu, set Auto False Echo Suppression to learn. The device will automatically revert to On (Use Learned TVT) after a few seconds.

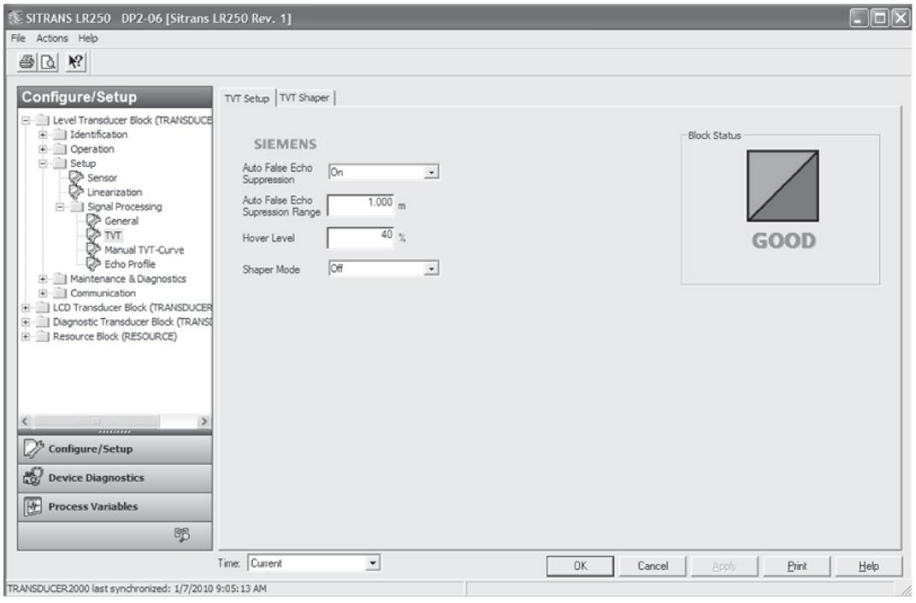

TVT Shaper

[see **TVT Shaper (2.5.11.)**]

- Breakpoints 1 to 40
- Shaper Mode

1. Open the menu **Configure/Setup > LTB > Setup > Signal Processing > TVT** and click on the TVT Setup tab
2. Turn Shaper Mode to **On** to activate Breakpoints 1 to 40 on the TVT Shaper tab

Manual TVT curve

Displays the effects of the TVT shaper modifications.

Navigate to **Configure/Setup > LTB > Setup > Signal Processing** and click on **Manual TVT Curve**.

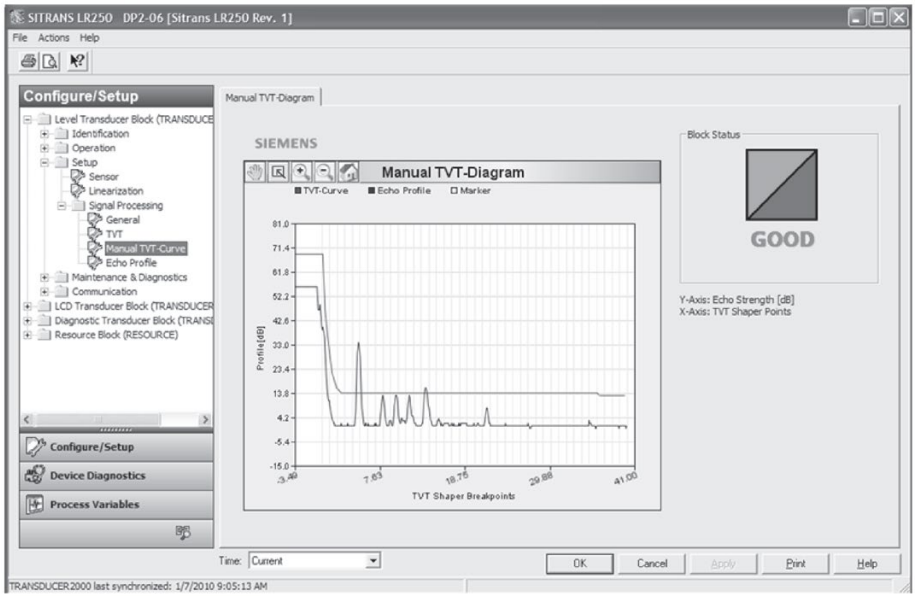

Echo Profile

Displays the current echo profile.

Navigate to **Configure/Setup > LTB > Setup > Signal Processing** and click on **Echo Profile** to view the current echo profile and to access:

Echo Profile Parameters

[see **Echo Profile (3.1.)**]

- Level Measurement [see **Measured Values (2.8)**]
- Distance Measurement [see **Measured Values (2.8.)**]
- Confidence [see **Confidence (2.5.9.1.)**]
- Near Range (see **(Near Range 2.5.1.)**]

To view a previous profile, click the drop-down arrow on the **Time** field and select the desired profile (note: available only using AMS version 10.1or later).

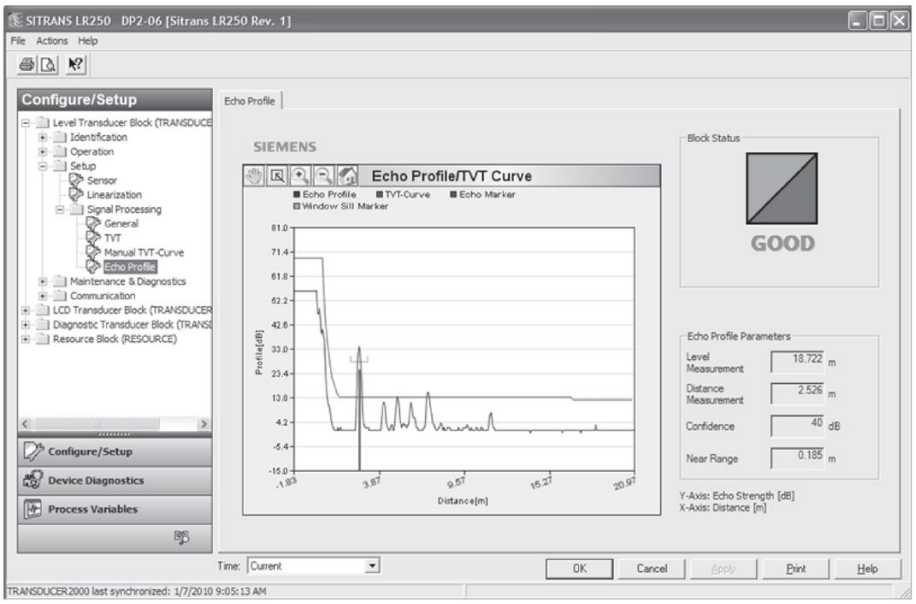

7.1.9.6 Maintenance & Diagnostics (LTB)

Note

For more detailed explanations of the parameters listed below see the pages referenced.

Navigate to **Configure/Setup > LTB > Maintenance and Diagnostics** for access to:

Remaining Sensor Lifetime

[see **Remaining Sensor LIfetime (4.3.)**]

- Lifetime (expected) [see **Lifetime (expected) (4.3.1.)**]
- Time in Operation [see **Time in Operation (4.3.2.)**]
- Remaining Lifetime [see **Remaining Lifetime (4.3.3.)**]
- Activation of Reminders [see **Activation of Reminders (4.3.4.)**]
- Reminder 1 before Lifetime (Required) [see **Reminder 1 before Lifetime (Required) (4.3.5.)**]
- Reminder 2 before Lifetime (Demanded) [see **Reminder 2 before Lifetime (Demanded) (4.3.6.)**]

1. Open the window **Remaining Sensor Lifetime**
2. After modifying values/units as required, click on **Apply** to accept the change.

- Click on **Sensor Replaced** to reset Time in Operation to 0 hours
- Click on **Snooze for 1 Year** to add a year to the Total Expected Sensor Life

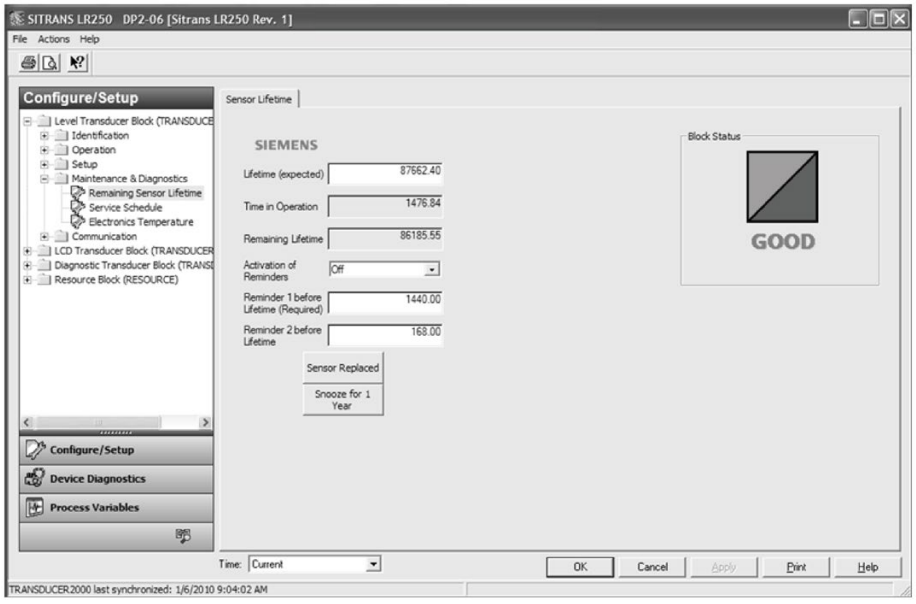

Service Schedule

[see **Service Schedule (4.4.)**]

- Service Interval [see **Service Interval (4.4.1.)**]
- Time Since Last Service [see **Time Since Last Service (4.4.2.)**]
- Time Until Next Service [see **Time Until Next Service (4.4.3.)**]
- Activation of Reminders [see **Activation of Reminders (4.4.4.)**]
- Reminder 1 before Lifetime (Required) [see **Reminder 1 before Service (Required) (4.4.5.)**]
- Reminder 2 before Lifetime (Demanded) [see **Reminder 2 before Service (Demanded) (4.4.6.)**]
- Click on **Service Performed** to reset Time Since Last Service to 0 hours

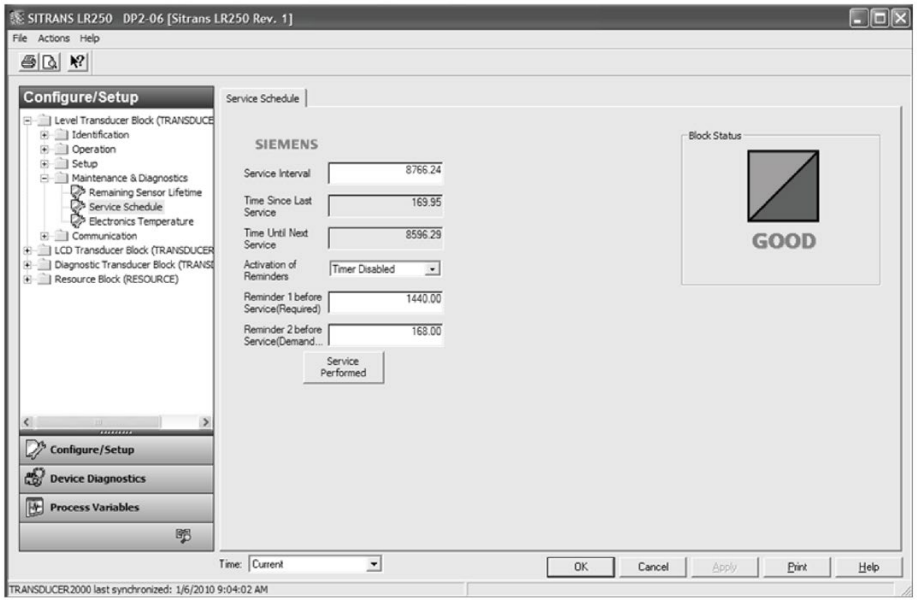
SITRANS LR250 DP2-06 [Sitrans LR250 Rev. 1]
File Actions Help
Configure/Setup
Level Transducer Block (TRANSDUCE
Identification
Operation
Setup
Maintenance & Diagnostics
Remaining Sensor Lifetime
Service Schedule
Electronics Temperature
Communication
LCD Transducer Block (TRANSDUCER
Diagnostic Transducer Block (TRANS
Resource Block (RESOURCE)
Configure/Setup
Device Diagnostics
Process Variables
Service Schedule
SIEMENS
Service Interval 8766.24
Time Since Last Service 169.95
Time Until Next Service 8596.29
Activation of Reminders Timer Disabled
Reminder 1 before Service(Required) 1440.00
Reminder 2 before Service(Demand... 168.00
Service Performed
Block Status
GOOD
Time: Current
OK
Cancel
Apply
Print
Help
TRANSDUCER2000 last synchronized: 1/6/2010 9:04:02 AM

Electronics Temperature

[see **Electronics Temperature (3.3.)**]

- Electronics Temperature: Displays the current internal temperature of the device
- Minimum Value [see **Minimum Value (3.3.1.)**]
- Maximum Value [see **Maximum Value (3.3.2.)**]

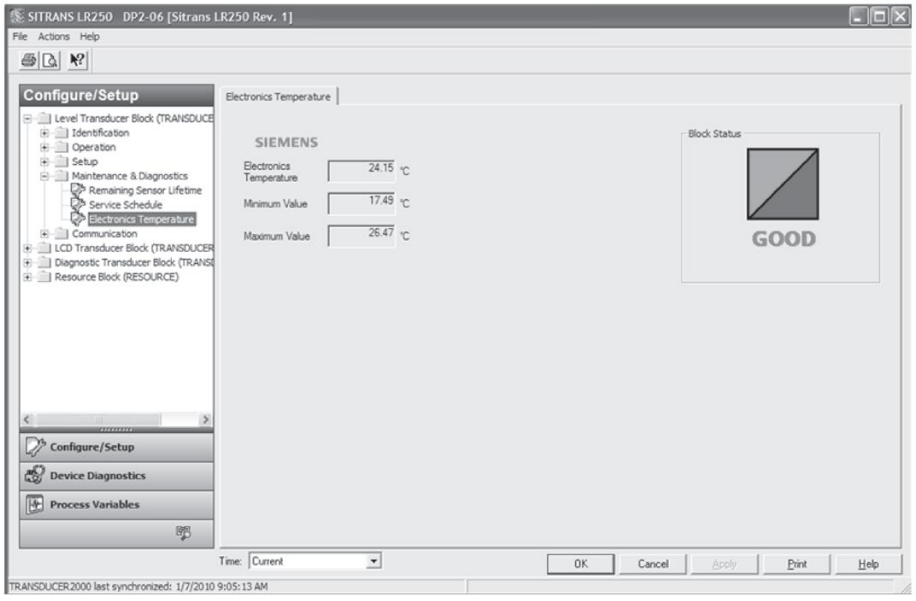

7.1.9.7 Communication (LTB)

Navigate to **Configure/Setup > LTB > Communication** for access to:

Communication:

- Static Revision No. [see **Static Revision Number (2.6.1.)**]

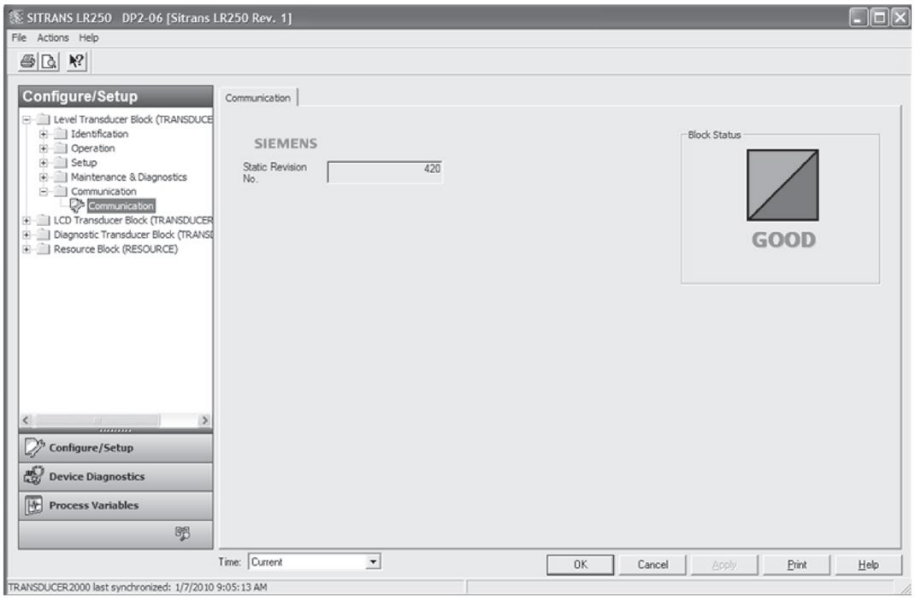

7.1.10 Configure/Setup (Liquid Crystal Display Block-LCD)

7.1.10.1 Identification (LCD)

Navigate to **Configure/Setup > LCD > Identification**.

Identification:

- TAG
- Descriptor
- Transducer Block Type
- Strategy
- Plant Unit

Note

For descriptions of Identification parameters see Identification (LTB) (Page 78).

7.1.10.2 Operation (LCD)

Note

For more detailed explanations of the parameters listed below see the pages referenced.

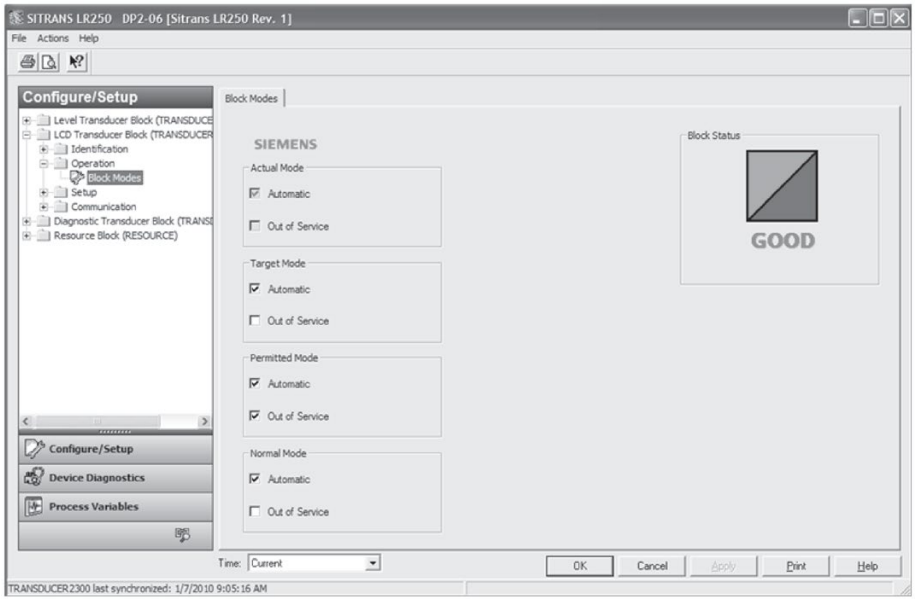

Navigate to **Configure/Setup > LCD > Operation**.

Click on **Block Modes** to open the dialog window for access to:

Block Modes:

- Actual Mode
- Target Mode
- Permitted Mode
- Normal Mode

Note

For descriptions of Block Modes see Operation (LTB) (Page 79).

To disable updating of the LCD remotely, Actual Mode of this block should read **Out of Service**. This is done by setting Target Mode to **Out of Service**.

7.1.10.3 Setup (LCD)

Navigate to **Configure/Setup > LCD > Setup > Local display** for access to:

Local Display

Language [see **Language (7.)**]

LCD Fast Mode [see **LCD Fast Mode (4.9.)**]

LCD Contrast [see **LCD Contrast (4.10.)**]

Local Operation [see **Local Operation (6.2.3.)**]

If local operation is disabled remotely and no communication activity exists for 30 seconds, the parameter is made visible again locally.

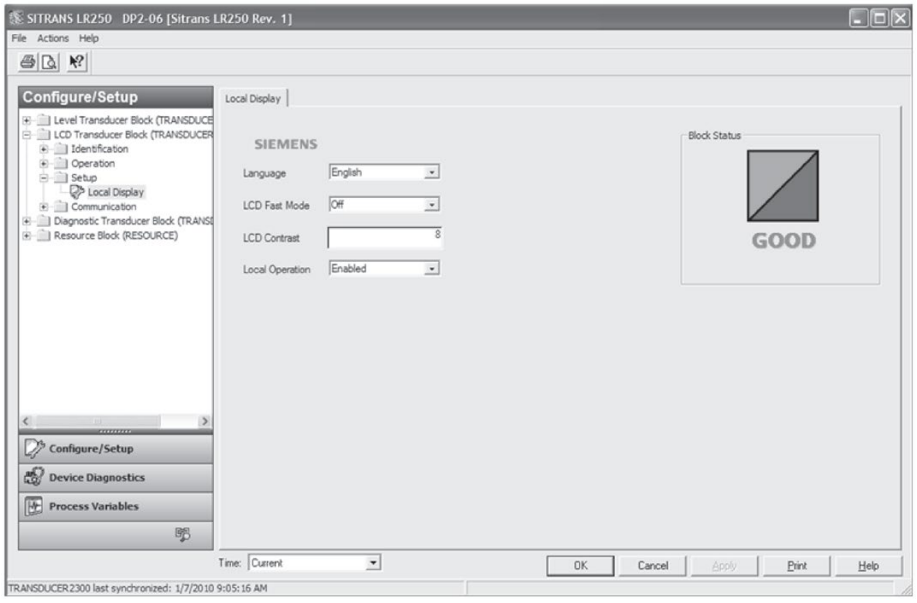

7.1.10.4 Communication (LCD)

Navigate to **Configure/Setup > LCD > Communication** for access to:

Communication:

- Static Revision No. [See **Static Revision Number (2.6.1.)**]

7.1.11 Configure/Setup (Diagnostic Transducer Block-DIAG)

Note

Parameters in the Diagnostic Transducer Block used solely by factory personnel.

7.1.11.1 Identification (DIAG)

Navigate to **Configure/Setup > DIAG > Identification**.

Identification:

- TAG
- Descriptor
- Transducer Block Type
- Strategy
- Plant Unit

Note

For descriptions of Identification parameters see Identification (LTB) (Page 78).

7.1.11.2 Operation (DIAG)

Navigate to **Configure/Setup > DIAG > Operation**.

Block Modes:

- Actual Mode
- Target Mode
- Permitted Mode
- Normal Mode

Note

For descriptions of Block Modes see Operation (LTB) (Page 79).

7.1.11.3 Communication (DIAG)

Navigate to **Configure/Setup > DIAG > Communication**.

Communication:

- Static Revision No. [see **Static Revision Number (2.6.1.)**]

7.1.12 Configure/Setup (Resource Block - RESOURCE)

Note

For more detailed explanations of the parameters listed below see the pages referenced.

7.1.12.1 Identification (RESOURCE)

Navigate to **Configure/Setup > RESOURCE > Identification** for access to:

Identification

- TAG: Read only. Description for the associated block: device tag prefixed by block type.
- Descriptor [see **Descriptor (2.1.2.)**]
- Message [see Message **(2.1.3.)**]
- Date (Installation Date): The user entered date on which the device was installed in the system.
- Strategy: Used to identify grouping of blocks.
- Plant Unit: The identification number of the plant unit. For example, can be used in the host for sorting alarms.

Device (read only)

- Manufacturer (see **Manufacturer (5.3.)**]
- Product Name: The manufacturer's product name for this device.
- Order Number: The manufacturer's order number (MLFB) for this device.
- Serial Number: The manufacturer's unique serial number for this device.
- Hardware Revision [see **Hardware Revision (2.2.1.)**]
- Firmware Revision [see **Firmware Revision (2.2.2.)**]
- Loader Revision [see **Loader Revision (2.2.3.)**]
- EDD Version: The version of the EDD currently installed.
- Date of Manufacturing [see **Manufacture Date (4.6.)**]

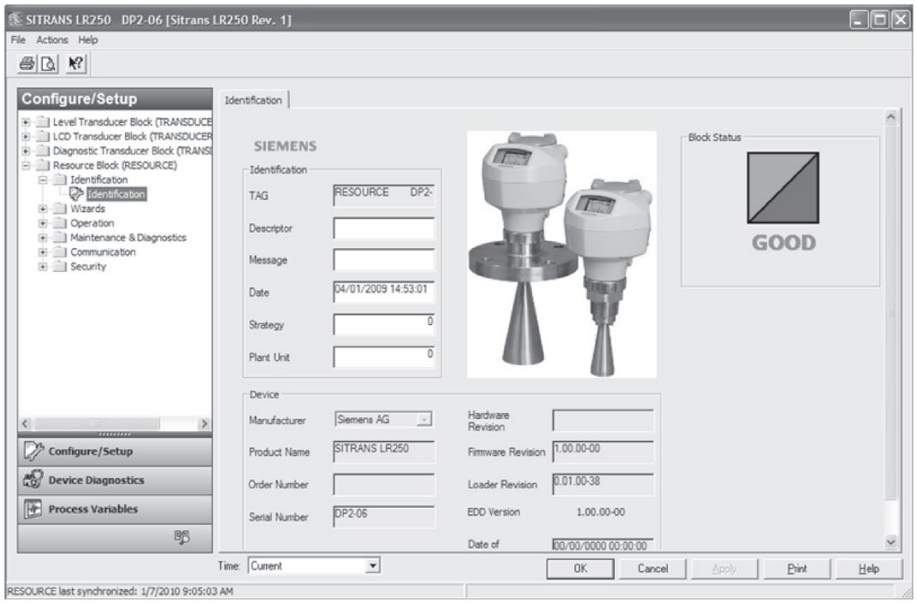

7.1.12.2 Wizards (RESOURCE)

Navigate to **Configure/Setup > RESOURCE > Wizards > Quick Start** for access to Quick Start steps [see Quick Start Wizard via AMS Device Manager (Page 75)].

7.1.12.3 Operation (RESOURCE)

Navigate to **Configure/Setup > RESOURCE > Operation**.

Click on **Block Modes** to open the dialog window for access to:

Block Modes:

- Actual Mode
- Target Mode
- Permitted Mode
- Normal Mode

Note

- For descriptions of Block Modes see Operations (LTB) (Page 79).
- If the RESOURCE block is set to Out of Service, the LTB, and AIFB blocks are forced to Out of Service also, but the LCD and DIAG blocks remain in Automatic mode

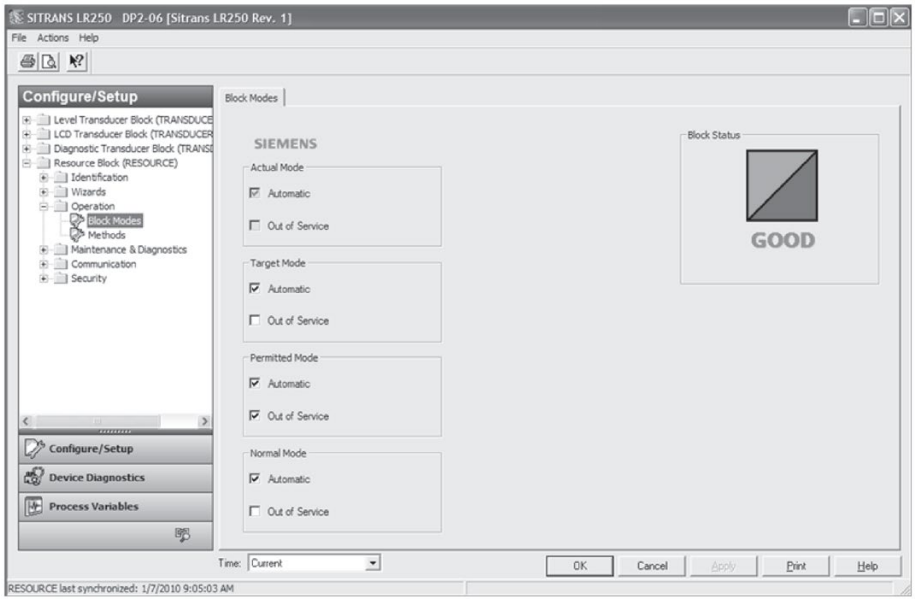

Click on **Methods** to open the dialog window for access to:

General:

- Master Reset: see **Master Reset (4.1.)**

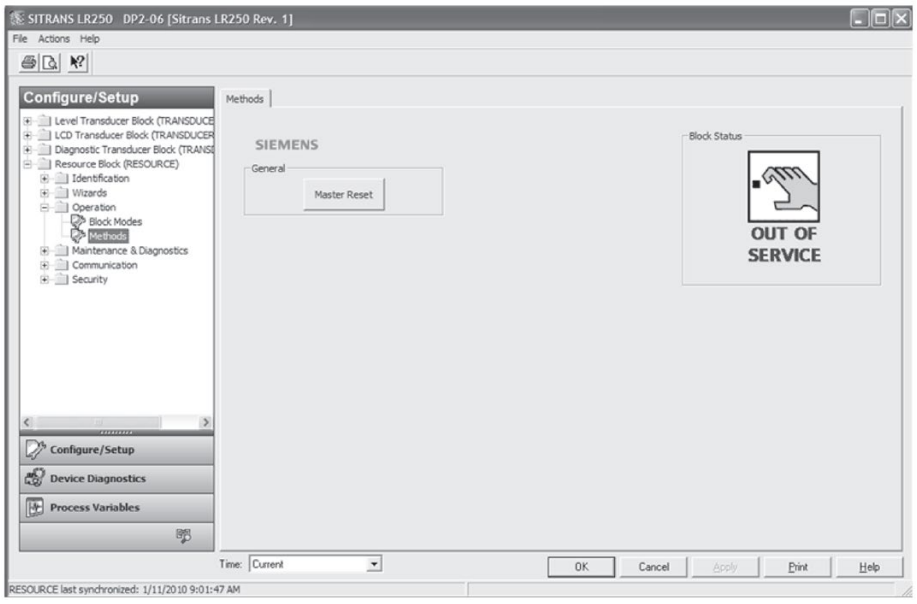

1. Ensure the Block Status is Out of Service.
2. Click the Master Reset button, then click Next to perform a reset.
3. Select the Reset Type

Note

The following parameters are not reset by any reset type: Write Protection, PIN to Unlock, Auto False Echo Suppression Range, Learned TVT.

Reset Type	Result
Factory Defaults [a]	Default. Resets all user parameters to the manufacturer's default settings. Following this type of reset, complete reprogramming is required.
Standard Defaults	Resets all parameters to standard default settings.
Informational	Resets parameters such as Block Descriptor, Strategy, Device Install Date, Device Message.
Functional [a]	Resets parameters that control device behavior and functionality (such as Low Calibration Point).
Warm Start	Has the same effect as recycling power to the device.
FF Object Dictionary	Resets the FF standard block profile parameters (such as block tags) to their specified defaults. This option also clears any function block parameters and device schedule [b] set by the user.

[a] The only difference between Factory Defaults and Functional reset is that Factory Defaults resets maintenance parameters, such as device and sensor wear, calibration and maintenance timers. Functional reset does not reset these parameters.

[b] See Data transmission in manual *Foundation Fieldbus for Level Instruments* (7ML19985MP01) for further details.

4. Click Next, then FINISH to complete the Master Reset.

7.1.12.4 Maintenance & Diagnostics (RESOURCE)

Navigate to **Configure/Setup > RESOURCE > Maintenance & Diagnostics** for access to:

Remaining Device Lifetime

[see **Remaining Device Lifetime (4.2.)**]

- Lifetime (expected) [see **Lifetime (expected (4.2.1.)**]
- Remaining Lifetime (read only) [see **Remaining Lifetime (4.2.3.)**]
- Time in Operation (read only) [see **Time in Operation (4.2.2.)**]
- Activation of Reminders [see **Activation of Reminders (4.2.4.)**]
- Reminder 1 before Lifetime (Required) [see **Reminder 1 before Lifetime (Required) (4.2.5.)**]
- Reminder 2 before Lifetime (Demanded) [see **Reminder 2 before Lifetime (Demanded) (4.2.6.)**]

1. Open the window **Remaining Device Lifetime**
2. After modifying values/units as required, click on **Apply** to accept the change.

- Click on **Snooze for 1 Year** to add a year to the Total Expected Device Life.

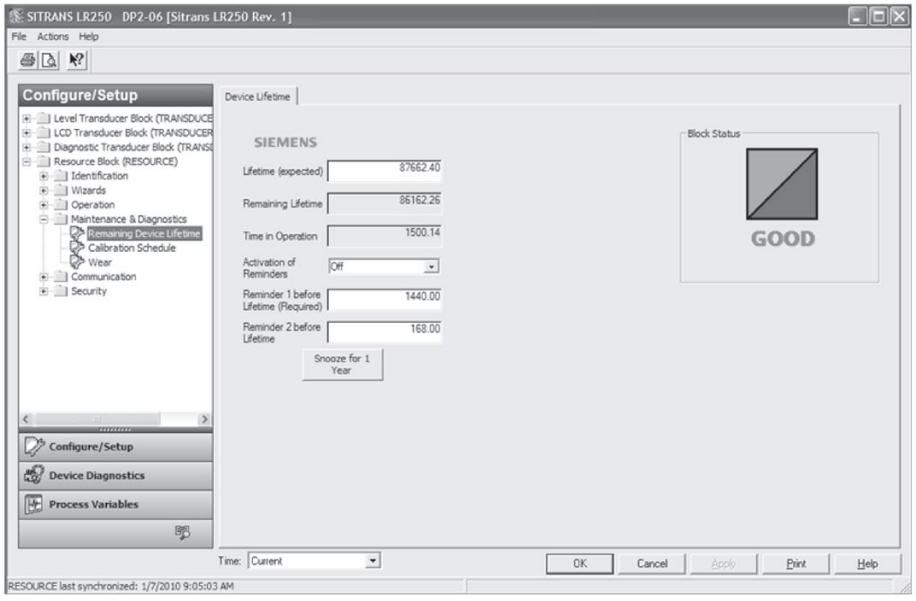

Calibration Schedule

[see **Calibration Schedule (4.5)**]

- Calibration Interval [see **Calibration Interval (4.5.1.)**]
- Time Since Last Calibration [see **Time Since Last Calibration (4.5.2.)**]
- Time Until Next Calibration (read only) [see **Time Until Next Calibration (4.5.3.)**]
- Activation of Reminders [see **Activation of Reminders (4.5.4.)**]
- Reminder 1 before Calibration (Required) [see **Reminder 1 before Calibration (Required) (4.5.5.)**]
- Reminder 2 before Calibration (Demanded) [see **Reminder 2 before Calibration (Demanded) (4.5.6.)**]
- Click on **Calibration Performed** to reset Time Since Last Calibration to 0 hours.

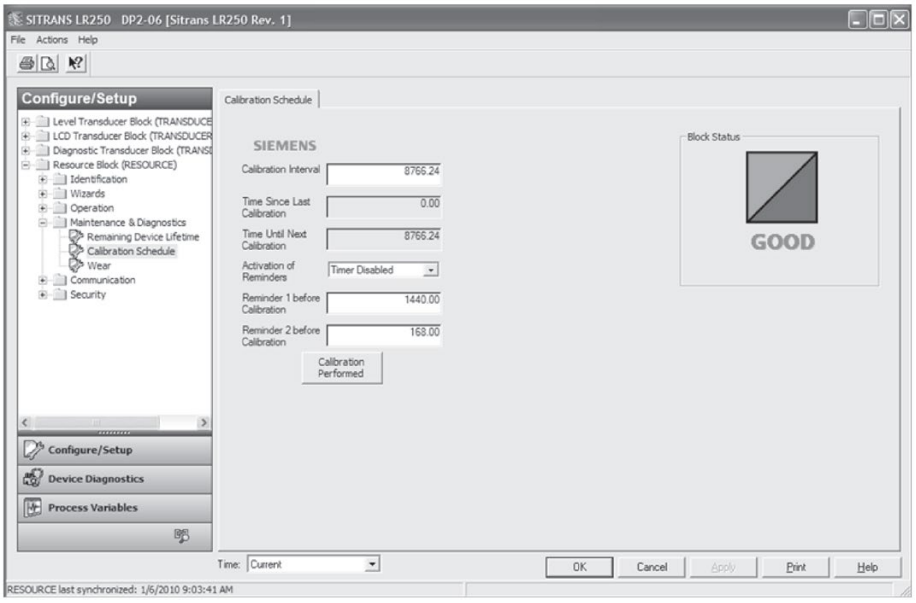

Wear

- Powered Days (read only) [see **Powered Hours (4.7.)**]
- Poweron Resets (read only) [see **Power-on Resets (4.8.)**]

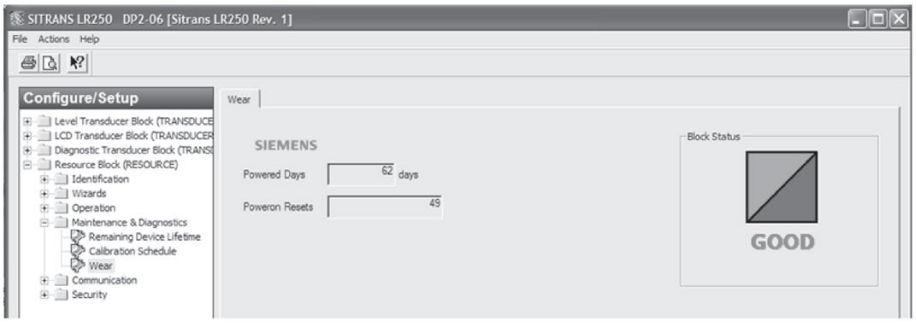

7.1.12.5 Communication (RESOURCE)

- Navigate to **Configure/Setup > RESOURCE > Communication** to read the following:
- Manufacturer [see **Manufacturer (5.3.)**]
- Product Name: the manufacturer's product name for this device.
- Device Revision [see **Device Revision (5.5.)**]
- DD Revision: revision of the DD (also called EDD) associated with this device.
- ITK Version [see **ITK Version (5.6.)**]
- Static Revision No. [see **Static Revision Number (2.6.1.)**]

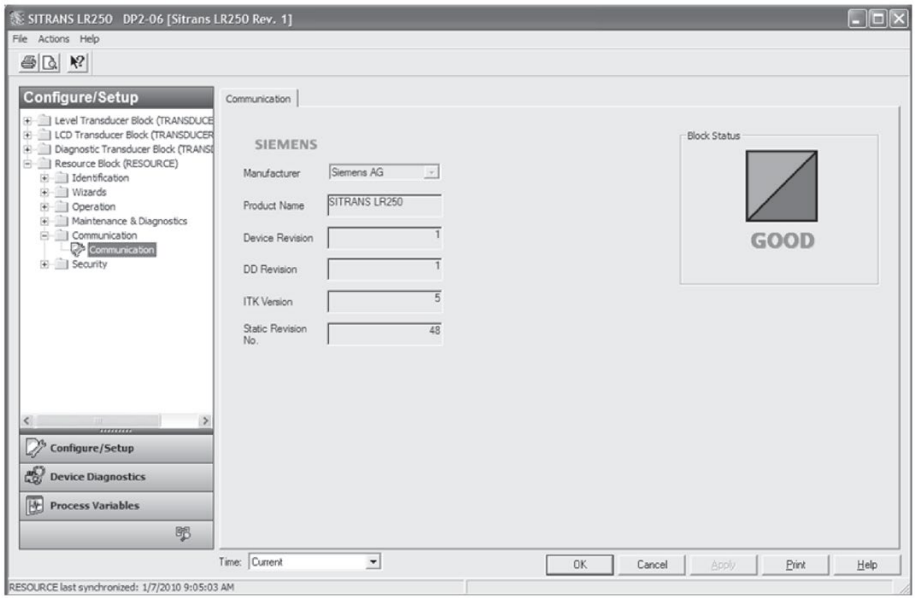

7.1.12.6 Security (RESOURCE)

Navigate to **Configure/Setup > RESOURCE > Security** to access:

Local Access

- Local Write Protected [see **Write Protection (6.2.1.)**]
- PIN to Unlock [see **PIN to Unlock (6.2.2.)**]

See also Password Protection (Page 111).

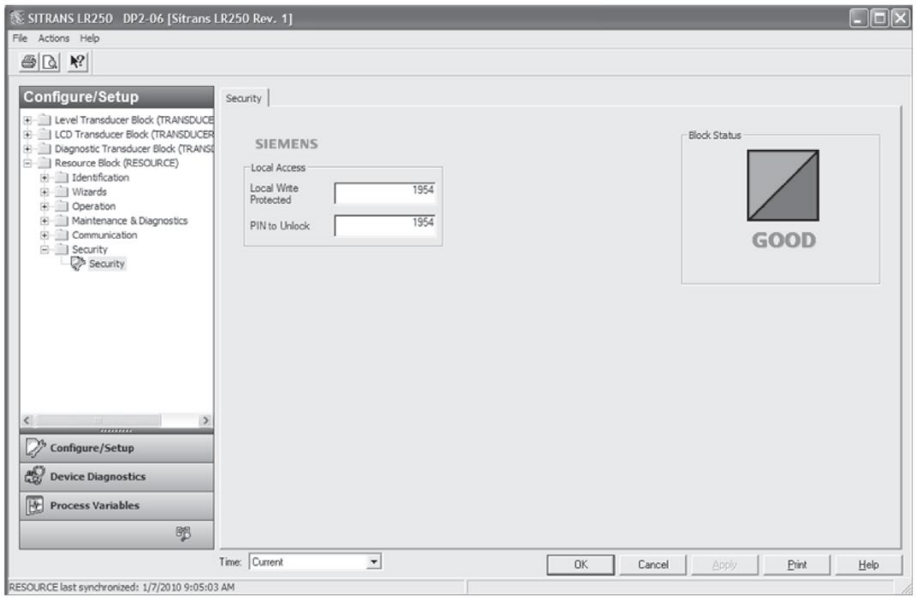

7.1.13 Device Diagnostics (Level Transducer Block - LTB)

Note

For explanations of the alarms and errors listed below, see Parameter Description charts for the respective block in manual *Foundation Fieldbus for Level Instruments* (7ML19985MP01).

7.1.13.1 Alarms & Errors (LTB)

Navigate to **Device Diagnostics > LTB > Alarms & Errors**.

Click on **Block Error** to open the dialog window to read the following:

Failures

- Input Failure
- Output Failure
- Memory Failure

- Lost Static Data
- Lost Non-Volatile Data
- Readback Check
- Device Fault State
- Block Configuration
- Link Configuration
- Other

Maintenance

- Maintenance Required
- Maintenance Demanded

Information

- Simulation Active
- Local Override
- Power Up
- Out of Service

XD Error

- Transducer Error

Click on **Block Alarm** to open the dialog window to read the following:

Unacknowledged

- Unacknowledged

Alarm State

- Alarm State

Time Stamp

- Time Stamp

Subcode

- Subcode

Value

- Value

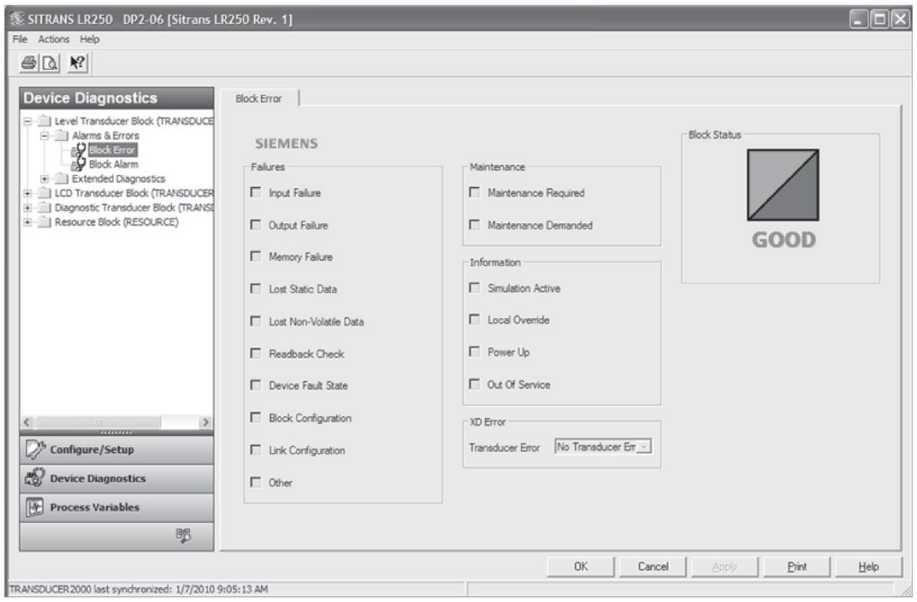

1. From the **Block Error** tab, check the **Maintenance** window to display the level of maintenance alarm that is active.
2. From the **Block Alarm** tab, check the **Alarm State** window to display the level of maintenance alarm that has been acknowledged.
3. From the **Block Alarm** tab, in the **Unacknowledged** window, select **Acknowledged** to acknowledge an alert.

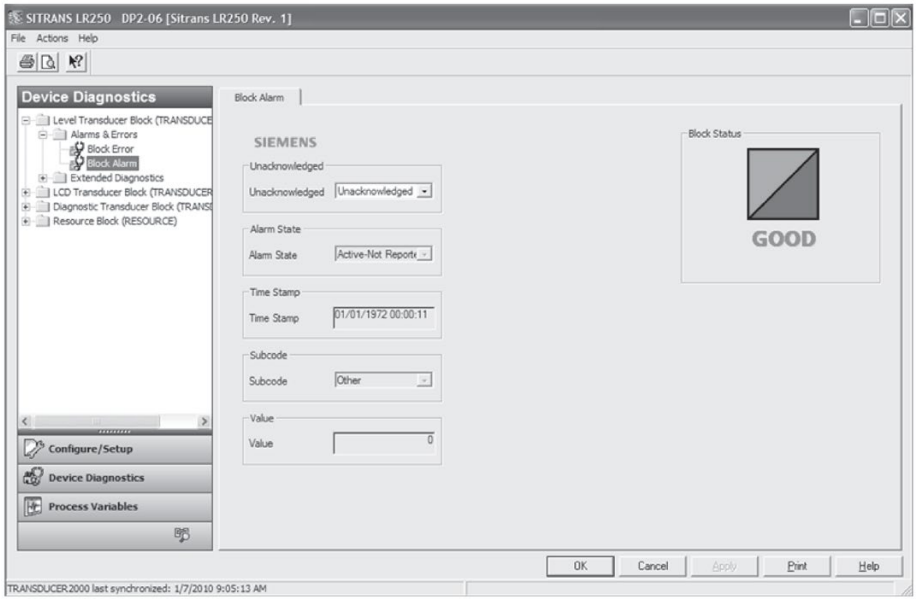

Note

Acknowledging a maintenance reminder from the device (see **Acknowledge (4.2.9.)**, **(4.3.9.)**, **(4.4.9.)**, **(4.5.9.)** will not set the Block Alarm to Acknowledged in AMS. The maintenance alarm will cause an FF block alert, and the block alert can only be acknowledged via a remote host such as NI-FBUS Configurator or AMS Device Manager (as in step 3 above).

7.1.13.2 Extended Diagnostics (LTB)

Navigate to **Device Diagnostics > LTB > Extended Diagnostics** to read the following:

Detailed Error Info

- Loss of Echo
- No Tech Power
- Sensor Lifetime Limit1
- Sensor Lifetime Limit2
- Device Service Limit1
- Device Service Limit2
- LTB Scale
- Internal Temp Sensor
- Internal Temp High
- Internal Temperature Calibration
- Velocity Calibration
- Receiver Init Calibration
- Receiver Calibration
- Tech Module Hardware
- Tech Module Ramp
- Receiver Frequency Calibration
- Safe Process Data Corrupt
- Profile Clipped
- Too Few Shots Taken
- Measurement Error
- No Shots Taken
- Measurement Was Corrupted
- DMA Error
- Sensor Value too High
- Sensor Value too Low

7.1.14 Device Diagnostics (Liquid Crystal Display Block - LCD)

7.1.14.1 Alarms & Errors (LCD)

Navigate to **Device Diagnostics > LCD > Alarms & Errors** to read Block and Alarm errors. [Errors displayed are the same for each block (LTB, LCD, DIAG, RESOURCE). See Alarms & Errors (LTB) (Page 103) for full listing.]

7.1.15 Device Diagnostics (Diagnostic Transducer Block - DIAG)

7.1.15.1 Alarms & Errors (DIAG)

Navigate to **Device Diagnostics > DIAG > Alarms & Errors** to read Block and Alarm errors. [Errors displayed are the same for each block (LTB, LCD, DIAG, RESOURCE). See Alarms & Errors (LTB) (Page 103) for full listing. See AMS Device Manager instruction manual to work with alarms and errors.]

7.1.16 Device Diagnostics (Resource Block - RESOURCE)

7.1.16.1 Alarms & Errors (RESOURCE)

Navigate to **Device Diagnostics > RESOURCE > Alarms & Errors**.

Click on **Block Error** tab to open the dialog window to read the following:

Failures

- Input Failure
- Output Failure
- Memory Failure
- Lost Static Data
- Lost Non-Volatile Data
- Readback Check
- Device Fault State
- Block Configuration
- Link Configuration
- Other

Maintenance

- Maintenance Required
- Maintenance Demanded

Information

- Simulation Active
- Local Override
- Power Up
- Out of Service

Click on **Block Alarm** tab to open the dialog window to read the following:

Unacknowledged

- Unacknowledged

Alarm State

- Alarm State

Time Stamp

- Time Stamp

Subcode

- Subcode

Value

- Value

Values available on **Block Alarm** tab are also available for **Write Alarm** with one exception: the Value parameter on the Write Alarm tab is a **Discrete Value**. Click on **Alarm Summary** tab to open the dialog window to read the following:

Current

- Discrete Alarm
- Block Alarm

Unacknowledged

- Discrete Alarm Unacknowledged
- Block Alarm Unacknowledged

Unreported

- Discrete Alarm Unreported
- Block Alarm Unreported

Disabled

- Write Alarm Disabled
- Block Alarm Disabled

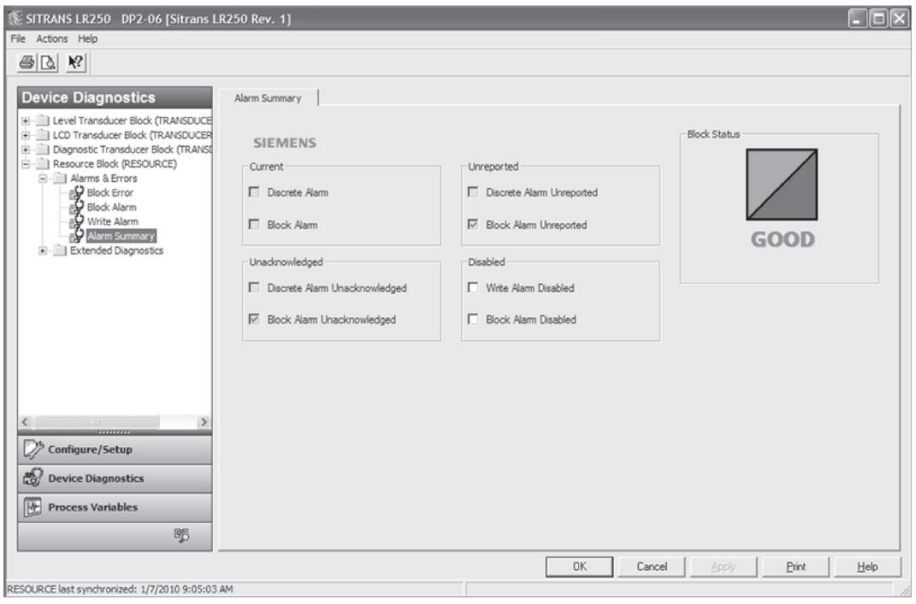

7.1.16.2 Extended Diagnostics (RESOURCE)

Navigate to **Device Diagnostics > RESOURCE > Extended Diagnostics** to read the following:

Detailed Error Info

- Device Lifetime Limit1
- Device Lifetime Limit2
- Calibration Schedule Limit1
- Calibration Schedule Limit2
- Memory RAM
- Memory EEPROM
- Memory EEPROM Flags
- Memory Flash
- Corrupt Stack
- High Stack
- Data Safe Read
- Data Safe Write
- Board Voltage
- ADC Failed
- Seq. Corrupt
- Seq. CP
- Seq. Duration
- BC Corrupt

- BC Start
- BC Stop
- BC Duration
- CPU Fault
- Data Bus
- Addr Bus
- Spurious SW Interrupt
- Spurious HW Interrupt
- Time Base Failure

7.1.17 Process Variables (Level Transducer Block - LTB)

To compare outputs in real time navigate to **Process Variables > LTB**.

Click on **Process Variables** then the **Values** tab to read the following:

Primary Variable

[see **Main Output (PV - Primary Value) (2.8.1.)**]

- Level/Volume (PV)

  The primary variable and the channel 1 output from the transducer block. For level applications, chart range is affected by High and Low Level Point values set in **Configure/Setup > LTB > Setup > Sensor**. For volume applications, chart range is 0 to Max. Volume, set in **Configure/Setup > LTB > Setup > Linearization**.

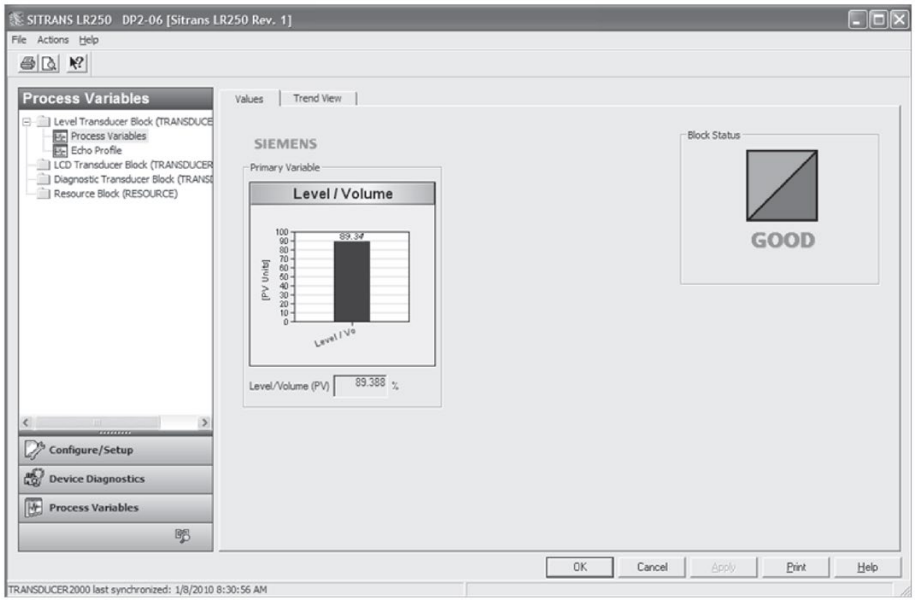

Click on **Trend View** tab to read the following:

Trend Values

- Level/Volume (PV)

  The primary variable and the channel 1 output from the transducer block.

Click on **Echo Profile** to open the dialog window to read the following:

Echo Profile

• Level Measurement [see **Measured Values (2.8.)**]

• Distance Measurement [see **Measured Values (2.8.)**]

• Confidence [see **Confidence (2.5.9.1.)**]

• Near Range [see **Near Range (2.5.1.)**]

7.1.18 Password Protection

7.1.18.1 User Manager utility

Usernames, passwords, and permissions, are assigned to users by an AMS Device Manager administrator, using the User Manager utility on the Server Plus Station. Only a user with AMS Device Manager System Administration rights can log in to User Manager.

To configure a new user/edit existing user:

1. From the Windows taskbar select: **Start > AMS Device Manager > User Manager**.
2. In the User Manager window click on **Add User**.

The Add User Wizard dialog allows you to:

- select a user type, standard (AMS Device Manager) or Window user.
- enter the username and password, and set permissions
- edit existing users

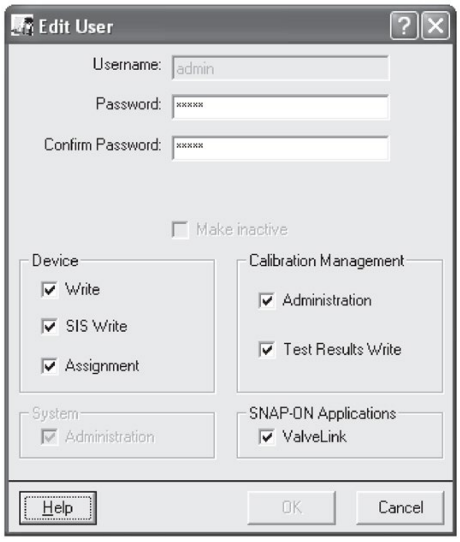

An AMS Device Manager administrator can configure the user to require a password. The use of passwords is recommended. A password should be assigned to the 'admin' username immediately after installing AMS Device Manager.

Each user is given an AMS Device Manager username and password and required to enter them when they start AMS Device Manager. Access to functions depends on the level of permissions granted.

Login types

- standard, local, or domain

A standard user can change their password in AMS Device Manager. A Local or Domain Windows user cannot change their password using AMS Device Manager and must request their network administrator to do so.

7.1.19 AMS menu structure

CONFIGURE/SETUP

LEVEL TRANSDUCER BLOCK

IDENTIFICATION

Identification

Identification (tab)

TAG
Descriptor
Transducer Block Type
Strategy
Plant Unit

IDENTIFICATION

Block Modes

Block Modes (tab)

Actual Mode
Automatic
Out of Service
Target Mode
Automatic
Out of Service
Permitted Mode
Automatic
Out of Service
Normal Mode
Automatic
Out of Service

Simulation

Simulation(input) (tab)

Sensor Value Simulation
Simulation
Simulation Value
RAMP start
RAMP end
RAMP No of steps
RAMP steplength

SETUP

Sensor

Sensor (tab)

General
Unit
Level Unit
Temperature Unit
PV (Volume/Level) Unit
Application Type
Material
Loss of Echo Timer

- Calibration
  - Low Calibration Point
  - High Calibration Point
  - Sensor Offset
  - Low Level Point
  - High Level Point
  - Level Offset
- Rate
  - Response Rate
  - Fill Rate per minute
  - Empty Rate per minute

Linearization

- Vessel Shape (tab)
  - Vessel Shape
    - Vessel Shape
  - Vessel Dimensions
    - Maximum Volume
    - Vessel Dimension A
    - Vessel Dimension L
- Breakpoints (tab)
  - Levels and Volume Breakpoints
    - Level 1
    - Level 2
    - ...
    - Level 32
    - Volume 1
    - Volume 2
    - ...
    - Volume 32
    - Vessel Shape

SIGNAL PROCESSING

General

- General (tab)
  - Range
    - Near Range
    - Far Range
    - Propogation Factor
    - Minimum Sensor Value
    - Maximum Sensor Value
  - Echo Select
    - Algorithm
    - Position Detect
    - Echo Threshold
    - CLEF Range
  - Sampling
    - Echo Lock
    - Sampling Up
    - Sampling Down
  - Echo Quality
    - Confidence
    - Echo Strength
    - Noise Average

TVT
- TVT Setup (tab)
  - Auto False Echo Suppression
  - Auto False Echo Suppression Range
  - Hover Level
  - Shaper Mode
- TVT Shaper (tab)
  - Breakpoints
    - Breakpoint 1
    - Breakpoint 2
    - ...
    - Breakpoint 40
    - Shaper Mode

Manual TVT-Curve
- Manual TVT-Diagram (tab)

Echo Profile
- Echo Profile (tab)
  - Echo Profile Parameters
    - Level Measurement
    - Distance Measurement
    - Confidence
    - Near Range

MAINTENANCE & DIAGNOSTICS

Remaining Sensor Lifetime
- Sensor Lifetime (tab)
  - Lifetime (expected)
  - Time in Operation
  - Remaining Lifetime
  - Activation of Reminders
  - Reminder 1 before Lifetime (Required)
  - Reminder 2 before Lifetime (Demanded)

Service Schedule
- Service Schedule (tab)
  - Service Interval
  - Time Since Last Service
  - Time Until Next Service
  - Activation of Reminders
  - Reminder 1 before Service (Required)
  - Reminder 2 before Service (Demanded)

Electronics Temperature
- Electronics Temperature (tab)
  - Electronics Temperature
  - Minimum Value
  - Maximum Value

COMMUNICATION

Communication
- Communication (tab)
  - Static Revision No.

LCD TRANSDUCER BLOCK

IDENTIFICATION

Identification
Identification (tab)
TAG
Descriptor
Transducer Block Type
Strategy
Plant Unit

OPERATION

Block Modes
Block Modes (tab)
Actual Mode
Automatic
Out of Service
Target Mode
Automatic
Out of Service
Permitted Mode
Automatic
Out of Service
Normal Mode
Automatic
Out of Service

SETUP

Local Display
Local Display (tab)
Language
LCD Fast Mode
LCD Contrast
Local Operation

COMMUNICATION

Communication
Communication (tab)
Static Revision No.

DIAGNOSTIC TRANSDUCER BLOCK

IDENTIFICATION

Identification
Identification (tab)
TAG
Descriptor
Transducer Block Type
Strategy
Plant Unit

OPERATION

Block Modes
Block Modes (tab)
Actual Mode
Automatic
Out of Service

Target Mode
Automatic
Out of Service
Permitted Mode
Automatic
Out of Service
Normal Mode
Automatic
Out of Service

COMMUNICATION

Communication
Communication (tab)
Static Revision No.

RESOURCE BLOCK

IDENTIFICATION

Identification
Identification (tab)
Identification
TAG
Descriptor
Message
Date
Strategy
Plant Unit
Device
Manufacturer
Product Name
Order Number
Serial Number
Hardware Revision
Firmware Revision
Loader Revision
EDD Version
Date of Manufacturing

WIZARDS

Quick Start

Step 1 - Identification
Step 1 of 5: Identification (tab)
TAG
Descriptor
Message
Date
Order Number
Language

Step 2 - Application
Step 2 of 5: Application (tab)
Application Type
Propogation Factor
Material

Step 3 - Vessel Shape
- Step 3 of 5: Vessel Shape (tab)
  - Vessel Shape

Step 4 - Ranges
- Step 4 of 5: Ranges (tab)
  - Unit
  - Low Calibration Point (X)
  - High Calibration Point (Y)
  - Response Rate
  - Maximum Volume
  - Vessel Dimension A
  - Vessel Dimension L
- Breakpoints (tab)
  - Levels and Volume Units
    - Level Unit
    - Level PV (Volume/Level) Unit
  - Levels and Volume Breakpoints
    - Level 1
    - Level 2
    - ...
    - Level 32
    - Volume 1
    - Volume 2
    - ...
    - Volume 32

Step 4 - Summary
- Step 5 of 5: Summary (tab)
  - Identification
    - TAG
    - Descriptor
    - Message
    - Date
    - Order Number
    - Language
  - Application
    - Application Type
    - Propogation Factor
    - Material
  - Vessel Shape
    - Vessel Shape
  - Ranges
    - Unit
    - Low Calibration Point (X)
    - High Calibration Point (Y)
    - Response Rate
    - Maximum Volume
    - Vessel Dimension A
    - Vessel Dimension L

OPERATION

Block Modes

Block Modes (tab)

Actual Mode

Automatic

Out of Service

Target Mode

Automatic

Out of Service

Permitted Mode

Automatic

Out of Service

Normal Mode

Automatic

Out of Service

Methods

Methods (tab)

General

Master Reset

MAINTENANCE & DIAGNOSTICS

Remaining Device Lifetime

Device Lifetime (tab)

Lifetime (expected)

Remaining Lifetime

Time in Operation

Activation of Reminders

Reminder 1 before Lifetme (Required)

Reminder 2 before Lifetime (Demanded)

Calibration Schedule

Calibration Schedule (tab)

Calibration Interval

Time Since Last Calibration

Time Until Next Calibration

Activation of Reminders

Reminder 1 before Calibration (Required)

Reminder 2 before Calibration (Demanded)

Wear

Wear (tab)

Powered Days

Poweron Resets

COMMUNICATION

Communication

Communication (tab)

Manufacturer

Product Name

Device Revision

DD Revision

ITK Version

Static Revision No.

SECURITY

Security

Security (tab)

Local Access

Local Write Protected

PIN to Unlock

DEVICE DIAGNOSTIC

LEVEL TRANSDUCER BLOCK

ALARMS & ERRORS

Block Error

Block Error (tab)

Failures

Input Failure

Output Failure

Memory Failure

Lost Static Data

Lost Non-Volatile Data

Readback Check

Device Fault State

Block Configuration

Link Configuration

Other

Maintenance

Maintenance Required

Maintenance Demanded

Information

Simulation Active

Local Override

Power Up

Out of Service

XD Error

Transducer Error

Block Alarm

Block Alarm (tab)

Unacknowledged

Unacknowledged

Alarm State

Alarm State

Time Stamp

Time Stamp

Subcode

Subcode

Value

Value

EXTENDED DIAGNOSTICS

Extended Diagnostics

Extended Diagnostics (tab)

Detailed Error Info

Loss of Echo

No Tech Power

Sensor Lifetime Limit1
Sensor Lifetime Limit2
Device Service Limit1
Device Service Limit2
LTB Scale
Internal Temp Sensor
Internal Temp High
Internal Temperature Calibration
Velocity Calibration
Receiver Init Calibration
Receiver Calibration
Tech Module Hardware
Tech Module Ramp
Receiver Frequency Calibration
Safe Process Data Corrupt
Profile Clipped
Too Few Shots Taken
Measurement Error
No Shots Taken
Measurement Was Corrupted
DMA Error
Sensor Value Too High
Sensor Value Too Low

LCD TRANSDUCER BLOCK

ALARMS & ERRORS

Block Error

Block Error (tab)

Failures

Input Failure
Output Failure
Memory Failure
Lost Static Data
Lost Non-Volatile Data
Readback Check
Device Fault State
Block Configuration
Link Configuration
Other

Maintenance

Maintenance Required
Maintenance Demanded

Information

Simulation Active
Local Override
Power Up
Out of Service

XD Error

Transducer Error

DIAGNOSTIC TRANSDUCER BLOCK

ALARMS & ERRORS

Block Error

Block Error (tab)

Failures

Input Failure
Output Failure
Memory Failure
Lost Static Data
Lost Non-Volatile Data
Readback Check
Device Fault State
Block Configuration
Link Configuration
Other

Maintenance

Maintenance Required
Maintenance Demanded

Information

Simulation Active
Local Override
Power Up
Out of Service

XD Error

Transducer Error

Block Alarm

Block Alarm (tab)

Unacknowledged

Unacknowledged

Alarm State

Alarm State

Time Stamp

Time Stamp

Subcode

Subcode

Value

Value

RESOURCE BLOCK

ALARMS & ERRORS

Block Error

Block Error (tab)

Failures

Input Failure
Output Failure
Memory Failure
Lost Static Data
Lost Non-Volatile Data
Readback Check
Device Fault State
Block Configuration

Link Configuration
Other

EXTENDED DIAGNOSTICS
Extended Diagnostics
Extended Diagnostics (tab)
Detailed Error Info
Device Lifetime Limit1
Device Lifetime Limit2
Calibration Schedule Limit1
Calibration Schedule Limit2
Memory RAM
Memory EEPROM
Memory EEPROM Flags
Memory Flash
Corrupt Stack
High Stack
Data Safe Read
Data Safe Write
Board Voltage
ADC Failed
Seq. Corrupt
Seq. CP
Seq. Duration
BC Corrupt
BC Start
BC Stop
BC Duration
CPU Fault
Data Bus
Addr Bus
Spurious SW Interrupt
Spurious HW Interrupt
Time Base Failure

PROCESS VARIABLES

LEVEL TRANSDUCER BLOCK

PROCESS VARIABLES
Process Variables
Values (tab)
Primary Variable
Level/Volume (PV)
Trend View (tab)
Trend Values
Level/Volume (PV)
Echo Profile
Echo Profile (tab)
Echo Profile Parameters
Level Measurement
Distance Measurement
Confidence
Near Range

Parameter reference

8

Note

- See **Enter PROGRAM** mode under LCD Display (Page 51) for detailed instructions.
- To view a particular parameter in AMS, see Operating via AMS Device Manager (Page 69).
- Do not use the handheld programmer at the same time as AMS Device Manager, or erratic operation may result.
- For Quick Access to parameters via the handheld programmer, press **Home** , then enter the menu number, for example: **2.2.1.** to access parameter **Hardware Revision (2.2.1.)**.
- In Navigation mode**, ARROW keys (**) navigate the menu in the direction of the arrow.
- Press **RIGHT arrow** to open **Edit** Mode, or to save a modification.

Parameters are identified by name and organized into function groups. Menus arranged on up to four levels give access to associated features and options. See LCD menu structure (Page 269) for a chart.

Parameters noted as **Read Only** in this section of the manual can not be written via the LUI, however they may be accessible via other tools. For those accessible via AMS Device Manager, directions are shown in section **Operating via AMS Device Manager** on the pages referenced.

Quick Start Wizard

The Quick Start Wizard groups together all the settings you need to configure a device for a simple application. You can access it either via AMS Device Manager or via the handheld programmer.

- Do not use the Quick Start Wizard via the handheld programmer to modify individual parameters. (Perform customization only after the Quick Start has been completed.)
- Each time the Quick Start Wizard is initiated via the handheld programmer, the startup settings are factory defaults. The Wizard will not recall previous user-defined settings. (Note: Values set using the Quick Start Wizard via AMS Device Manager are saved and recalled each time it is initiated.)
- When using AMS Device Manager, the Resource and LTB Blocks must be set to Out of Service mode before any configuration changes (changes to parameters affecting block output) can be written. The blocks do not need to be set to Out of Service when the Quick Start Wizard is initiated via the handheld programmer.

Quick Start (1.)

Note

For detailed instructions see Quick Start Wizard via the handheld programmer (Page 58) or Quick Start Wizard via AMS Device Manager (Page 75).

Setup (2.)

Note

- See Parameter menus (Page 53) or Operating via AMS Device Manager (Page 69) for instructions.
- Default settings in the parameter tables are indicated with an asterisk (*) unless explicitly stated.
- Values shown in the following tables can be entered via the handheld programmer.

Identification (2.1.)

Tag (2.1.1.)

Read only. Text that can be used in any way. A recommended use is as a unique label for a field device in a plant. Limited to 32 ASCII characters.

Note

The tag can only be changed from a remote master such as NIFBUS-Configurator or DeltaV.

Descriptor (2.1.2.)

Read only. Text that can be used in any way. Limited to 32 ASCII characters. No specific recommended use.

To access this parameter via AMS Device Manager see **Identification** under Identification (RESOURCE) (Page 97).

Message (2.1.3.)

Read only. Text that can be used in any way. Limited to 32 ASCII characters. No specific recommended use.

To access this parameter via AMS Device Manager see Identification under Identification (RESOURCE). (Page 97)

Device (2.2.)

Hardware Revision (2.2.1.)

Read only. Corresponds to the electronics hardware of the Field Device.

Firmware Revision (2.2.2.)

Read only. Corresponds to the software or firmware that is embedded in the Field Device.

Loader Revision (2.2.3.)

Read only. Corresponds to the software used to update the Field Device.

Sensor (2.3.)

Unit (2.3.1)

Sensor measurement unit.

Values		m, cm, mm, ft, in
	*	m

Level Unit (2.3.2.)

Select engineering units for Level.

Options		m, cm, mm, ft, in, %
	*	%

PV Units (volume/level) (2.3.3.)

Note

- Default unit of AIFB 1 or 2 is percent.
- You can select a different unit for your application.
- PV (Primary Value): the output from the Level Transducer Block. See **Level Transducer Block (LTB)** and **How the LTB works**: in manual *Foundation Fieldbus for Level Instruments* (7ML19985MP01) for more details.

Select units for either volume or level.

Level values		m, cm, mm, ft, in, %
Volume values		liter, gal, ImpGal, %
Percent value	*	%

Temperature Units (2.3.4.)

Selects the engineering unit to be displayed with the value representing temperature.

Options		DEGC, DEGF, DEGR, K
	*	DEGC

Material (2.3.5.)

Automatically configures the device to operate in the chosen application type, by changing one or more of the following parameters: **Propagation Factor (2.5.3.)**, **Position Detect (2.5.7.2.)**, and/or **CLEF Range (2.5.7.4.)**.

Options	*	LIQUID
		LIQUID LOW DK [a] (low dielectric liquid - CLEF algorithm enabled)
Related parameters	Propagation Factor (2.5.3.) Position Detect (2.5.7.2.) CLEF Range (2.5.7.4.)	

[a] dK < 3.0

You can configure each of the related parameters, to suit your particular application.

LOE Timer (2.3.6.)

Note

See Loss of Echo (LOE) (Page 247) for more detail.

Sets the time to elapse since the last valid reading, before the Fail-safe material level is reported.

Values	Range: **0** to **7200** seconds
	Default: 100 s

Calibration (2.3.7)

Low Calibration Pt. (2.3.7.1.)

Distance from sensor reference point to Low Calibration Point (corresponding to Low Level Point). Units are defined in **Unit (2.3.1.).**

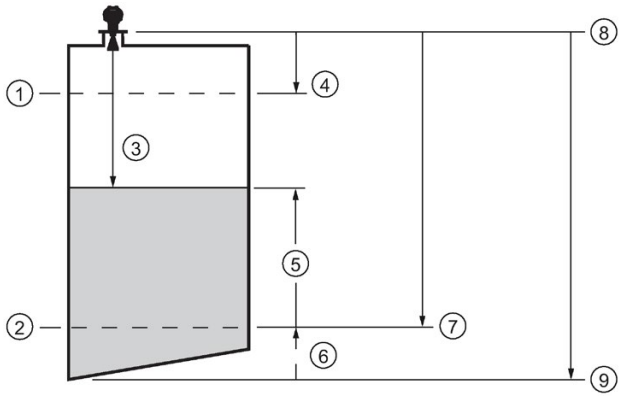

①	High level point (default 100%)	⑥	Level offset (if used)
②	Low level point (0%)	⑦	Low calibration point
③	Sensor value	⑧	Sensor reference point [a]
④	High calibration point	⑨	Far range
⑤	Level		

[a] The point from which level measurement is referenced [see Flat Faced Flange (Page 232) and Threaded Horn Antenna with extension (Page 195) and Flanged encapsulated antenna (3"/DN80/80A sizes and larger). (Page 206)].

Values	Range: **0.00** to **20.00** m. Default 20.00 m
Related parameters	Unit (2.3.1.) Far Range (2.5.2.)

High Calibration Point (2.3.7.2.)

Distance from sensor reference point [1] to High Calibration Point (corresponding to High Level Point). Units are defined in **Unit (2.3.1.).** See **Low Calibration Point (2.3.7.1.)** for an illustration.

Values	Range: **0.00** to **20.00** m. Default 0.00 m
Related parameters	Unit (2.3.1.), Near Range (2.5.1.)

When setting the High Calibration Point value, note that echoes are ignored within **Near Range (2.5.1.).**

[1] The value produced by the echo processing which represents the distance from sensor reference point to the target. [see Threaded Horn Antenna with extension, (Page 198) Flanged Horn with extension (Page 202), and Flanged encapsulated antenna (3"/DN80/80A sizes and larger) (Page 206)].

Sensor Offset (2.3.7.3.)

A constant offset that can be added to or subtracted from the sensor value to compensate for a shifted sensor reference point. (For example, when adding a thicker gasket or reducing the standoff/nozzle height.) The units are defined in **Unit (2.3.1.)**.

Values	Range: **-99.999** to **99.999** Default: 0.000 m
Related Parameters	Unit (2.3.1.)

See **How the LTB works**: in manual *Foundation Fieldbus for Level Instruments (7ML19985MP01)* for more details on sensor offset.

Low Level Point (2.3.7.4.)

The level when the material is at Low Calibration Point. The unit is defined in **Level Unit (2.3.2.)**.

Values	Range: **-999999** to **999999**
	Default: 0%

High Level Point (2.3.7.5.)

The level when the material is at High Calibration Point. The unit is defined in **Level Unit (2.3.2.)**.

Values	Range: -**999999** to +**999999**
	Default: 100%

Level Offset (2.3.7.6.)

A constant offset that can be added to Level. The unit is defined in **Level Unit (2.3.2.)**.

Values	Range: **-999999** to +**999999**
	Default: 0%

Rate (2.3.8.)

Response Rate (2.3.8.1.)

Sets the reaction speed of the device to measurement changes.

Note

Changing Response Rate resets **Fill Rate per Minute (2.3.8.2)**, **Empty rate per Minute (2.3.8.3)**, and **Shots (2.5.6.)**.

Response Rate (2.3.8.1.)		**Fill Rate per Minute (2.3.8.2.)/ Empty rate per Minute (2.3.8.3.)**	**Shots (2.5.6.)**
*	Slow	0.1 m/min (0.32 ft/min)	25
	Medium	1.0 m/min (3.28 ft/min)	10
	Fast	10.0 m/min (32.8 ft/min)	5

Use a setting just faster than the maximum filling or emptying rate (whichever is faster).

Fill Rate per Minute (2.3.8.2.)

Defines the maximum rate at which the reported sensor value is allowed to decrease. Allows you to adjust the SITRANS LR250 response to decreases in the actual material level. Fill Rate is automatically updated whenever **Response Rate (2.3.8.1.)** is altered.

Sensor value is the value produced by the echo processing which represents the distance from sensor reference point to the target [see **Low Calibration Point (2.3.7.1.)** for an illustration].

Options	Range: **0 to 999999** m / min.		
	Response Rate (2.3.8.1.)		**Fill Rate per Minute (2.3.8.2.)**
	*	Slow	0.1 m/min (0.32 ft/min)
		Medium	1.0 m/min (3.28 ft/min)
		Fast	10.0 m/min (32.8 ft/min)
Altered by:	Response Rate (2.3.8.1.)		
Related parameters	Level Unit (2.3.2.)		

Enter a value slightly greater than the maximum vessel-filling rate, in units per minute.

Empty Rate per Minute (2.3.8.3)

Defines the maximum rate at which the reported sensor value is allowed to increase. Adjusts the SITRANS LR250 response to increases in the actual material level. Empty Rate is automatically updated whenever Response Rate is altered.

The sensor value is the value produced by the echo processing which represents the distance from sensor reference point to the target [see **Low Calibration Point (2.3.7.1.)** for an illustration].

Options	Range: **0 to 99999** m / min.		
	Response Rate (2.3.8.1.)		**Empty Rate**
	*	Slow	0.1 m/min (0.32 ft/min)
		Medium	1.0 m/min (3.28 ft/min)
		Fast	10.0 m/min (32.8 ft/min)
Altered by:	Response Rate (2.3.8.1)		
Related parameters	Level Unit (2.3.2.)		

Enter a value slightly greater than the vessel's maximum emptying rate, in units per minute.

Linearization (2.4.)

Volume (2.4.1.)

Carries out a volume conversion from a level value.

Vessel Shape (2.4.1.1.)

Defines the vessel shape and allows the LR250 to calculate volume instead of level. If **None** is selected, no volume conversion is performed. Select the vessel shape matching the monitored vessel or reservoir.

	Vessel Shape	LCD DISPLAY/ Description	Also required
*	None	NONE/ No volume calculation required	N/A
		CYLINDER/ Flat end horizontal cylinder	Maximum volume
	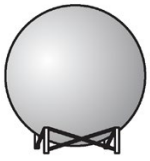	SPHERE/ Sphere	Maximum volume
	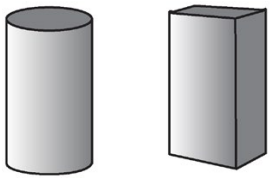	LINEAR/ Upright, linear (flat bottom)	Maximum volume
	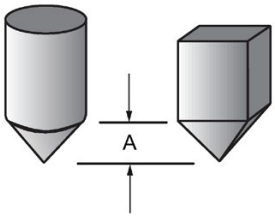	CONICAL BOT/ Conical or pyramidal bottom	Maximum volume, dimension A
	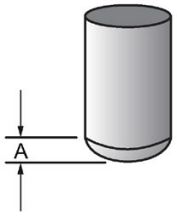	PARABOLIC BOT/Parabolic bottom	Maximum volume, dimension A
	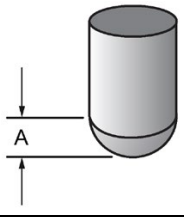	HALF SPHERE BOT/ Half-sphere bottom	Maximum volume, dimension A

	Vessel Shape	LCD DISPLAY/ Description	Also required
	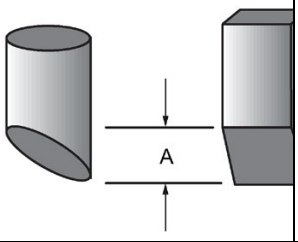	FLAT SLOPED BOT/ Flat sloped bottom	Maximum volume, dimension A
	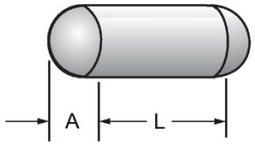	PARABOLIC ENDS/ Parabolic end horizontal cylinder	Maximum volume, dimension A, dimension L
	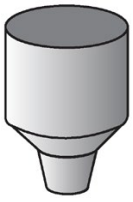	LINEAR TABLE [a] / Linearization table (level/volume breakpoints)	Maximum volume, level breakpoints, volume breakpoints

[a] Linearization Table must be selected in order for level/volume values [see **XY index (2.4.1.5.)**] to be transferred.

Maximum Volume (2.4.1.2.)

The maximum volume of the vessel. Units are defined in **PV Units (volume/ level) (2.3.3.)**. Enter the vessel volume corresponding to High Calibration Point. The volume calculation is based on the maximum volume and scaled according to the vessel shape selected. If no vessel shape is entered, the default is 100, and the reading will be a percentage value.

Values	Range: **0.0000** to **999999**
	Default: 100.0
Related Parameters	Low Calibration Pt. (2.3.7.1.) High Calibration Pt. (2.3.7.2.) Vessel Shape (2.4.1.1.)

For readings in volumetric units instead of percentage values:

1. Select a volumetric unit from **PV Units (volume/level) (2.3.3.)**.
2. Enter the vessel volume corresponding to High Calibration Point.

Vessel Dimension A (2.4.1.3.)

The height of the vessel bottom in Level Units when the bottom is conical, pyramidal, parabolic, spherical, or flat -sloped. If the vessel is horizontal with parabolic ends, the depth of the end. See **Vessel Shape (2.4.1.1.)** for an illustration.

Values	Range: **0.0000** to **999999** in Level Units
	Default: 0.0
Related Parameters	Vessel Shape (2.4.1.1.)

Dimension L (2.4.1.4.)

Length of the cylindrical section of a horizontal parabolic end vessel, in Level Units. See **Vessel Shape (2.4.1.1.)** for an illustration.

Values	Range: **0.0000** to **999999** in Level Units
	Default: 0.0
Related Parameters	Vessel Shape (2.4.1.1.)

XY index (2.4.1.5.)

Level/Volume breakpoints allow you to define a complex vessel shape as a series of segments. A value is assigned to each level breakpoint and a corresponding value is assigned to each volume breakpoint.

Volume values are defined in volume units and can be percent or volumetric; level values are defined in level units, and can be percent or linear.

Level values	Range: **0.0000** to **999999** (m, cm, mm, ft, in, %)
	Default: 0.0
Volume values	Range: **0.0000** to **999999** (% or volumetric units)
	Default: 0.0

Enter up to 32 level breakpoints, where the corresponding volume is known. The values corresponding to 100% and 0% levels must be entered. The breakpoints can be ordered from top to bottom, or the reverse.

Example (values are for example purposes only)

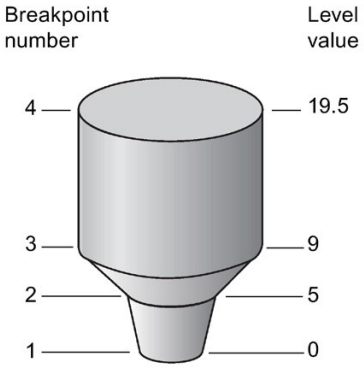

Breakpoint Number	Level value (m)	Volume value (l)
1	0	0
2	5	500
3	9	3000
4	19.5	8000

Entering breakpoints via the hand-held programmer:

1. The default for level values is percent: if you want to select units instead, navigate to **Setup (2.) > Sensor (2.3.) > Level Unit (2.3.2.)**, and select the desired unit.
2. Navigate to **Setup (2.) > Sensor (2.3.) > PV Units (volume/level) (2.3.3.)**, and select the desired volume units.
3. Go to **XY index (2.4.1.5.)** and enter the number of the breakpoint you wish to adjust: for example, for breakpoint **1** enter **1**.
4. Go to **X value (2.4.1.6.)** and enter the level value for the breakpoint just identified.
5. Go to **Y value (2.4.1.7.)** and enter the volume value for the breakpoint just identified.
6. Repeat steps 3 to 5 until values have been entered for all required breakpoints.

X value (2.4.1.6.)

See **XY Index (2.4.1.5.)**.

Y value (2.4.1.7.)

See **XY Index (2.4.1.5.)**.

Entering breakpoints via AMS: See Linearization (LTB) (Page 83)

After completing the above steps you will need to configure AIFB 1 and/or AIFB 2. [See **AIFB 1 (2.6.)** and **AIFB 2 (2.7.)** for details.]

Signal Processing (2.5.)

In AMS Device Manager, see the General tab under Signal Processing (LTB) (Page 85).

Near Range (2.5.1.)

The range in front of the device (measured from the sensor reference point within which any echoes will be ignored. (This is sometimes referred to as "Blanking" or "Dead Zone".) The factory setting is 50 mm (2") past the end of the antenna, and the range is dependent on the antenna type and process connection. [See Threaded Horn Antenna with extension (Page 195) and Flanged Horn (Page 200) for antenna heights to sensor reference point.]

Values	Range: **0** to **20** m (0 to 65.6 ft)		
	Default depends on antenna type and process connection.		
	Examples:	1.5" threaded horn	185.3 mm (7.3")
		4" horn with stainless steel flange and 100 mm (4") extension	373.3 mm (14.7")
Related parameters	Unit (2.2.1.)		

Far Range (2.5.2.)

Note

Far Range can extend beyond the bottom of the vessel.

Allows the material level to drop below Low Calibration Point without generating a Loss of Echo (LOE) state. See **Low Calibration Pt. (2.3.7.1.)** for an illustration.

Values	Range: Min. = **Low Calibration Pt.** Max. = **33** m (108.27 ft) Default: Value for Low Calibration Pt. + 1 m (3.28 ft)
Related parameters	Unit (2.3.1.) CLEF (Constrained Leading Edge Fit) Range (2.5.7.4.) [a]

[a] The value set for Far Range becomes the CLEF Range maximum. If the value for Far Range is changed after a CLEF Range value is entered, CLEF Range is reset to its default (0.00 m).

Use this feature if the measured surface can drop below the Low calibration point in normal operation.

Propogation Factor (2.5.3.)

Note

- When operating in a stillpipe, values for **CLEF Range (2.5.7.4.)**, and for the Propagation Factor, should be set according to the pipe size. See the table below.
- For reliable results the antenna size must be close to the pipe size.

Compensates for the change in microwave velocity due to propagation within a metal stillpipe instead of in free space.

Values	Range:	**0.3** to **1.0** depending on pipe size.		
	Default:	**1.0000**		
Nominal Pipe Size[a)]	40 mm (1.5")	50 mm (2")	80 mm (3")	100 mm (4")
Propagation Factor	0.9844	0.988	0.9935	0.9965
CLEF Range (2.5.7.4.)	Low calibration point - 700 mm (2.29 ft)[b)]	Low calibration point - 700 mm (2.29 ft)[b)]	Low calibration point - 1000 mm (3.28 ft)[b)]	Low calibration point - 1000 mm (3.28 ft)[b)]

[a)] Since pipe dimensions may vary slightly, the propagation factor may also vary.

[b)] CLEF range covers the whole measurement range except first 700 or 1000 mm from unit reference
point (see A in graphic below)

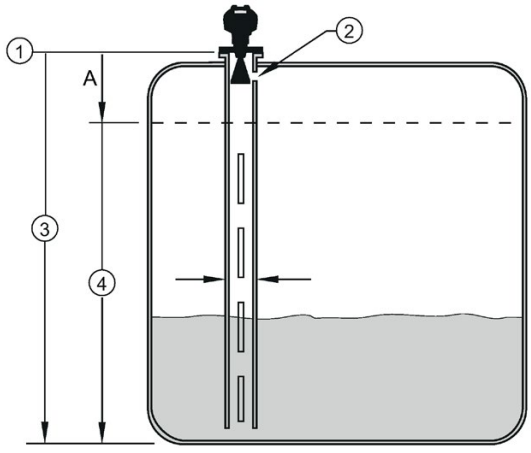

① sensor reference point
② air gap
A 700 or 1000 mm
③ low calibration point
④ CLEF range 2.5.7.4.

Note

Flanged encapsulated antenna

For Flanged encapsulated antenna (7ML5432) match the process connection size to the pipe diameter whenever possible (for example, mount a DN80/3" flange on DN80/3" pipe).

Minimum Sensor Value (2.5.4.)

The minimum usable value for the measuring range, in units defined in **Unit (2.3.1.)**. (Default = 0.0 m)

To view this parameter via AMS Device Manager see **Range** under Signal Processing (LTB) (Page 85).

Maximum Sensor Value (2.5.5.)

The maximum usable value for the measuring range, in units defined in **Unit (2.3.1.)**. (Default = 33.0 m)

To view this parameter via AMS Device Manager see **Range** under Signal Processing (LTB) (Page 85).

Shots (2.5.6.)

The number of echo profile samples averaged to produce a measurement.

Values	Range: **1** to **25**
	Default: 25 [a]

[a] To meet accuracy specification, the number of shots must be set to 25 [see Performance (Page 187)].

Echo Select (2.5.7.)

Algorithm (2.5.7.1.)

Selects the algorithm to be applied to the echo profile to extract the true echo.

Options	*	**tF**	**T**rue **F**irst echo
		F	**F**irst echo
		L	**L**argest echo
		BLF	**B**est of **L**argest and **F**irst echo

Position Detect (2.5.7.2.)

Defines where on the echo the distance measurement is determined.

Options		Center
	*	Hybrid (Center and CLEF)
		CLEF (Constrained Leading Edge Fit)
Related parameters	CLEF Range (2.5.7.4.)	

If the vessel bottom is being reported as the level instead of the actual material level (at low level conditions), or if the dielectric constant of the liquid to be monitored is less than 3, we recommend setting Position Detect to **Hybrid** and **CLEF (Constrained Leading Edge Fit) Range (2.5.7.4.)** to 0.5 m (1.64 ft).

Echo Threshold (2.5.7.3.)

Sets the minimum echo confidence that the echo must meet in order to prevent a Loss of Echo condition and the expiration of the Fail-safe (LOE) timer. When **Confidence (2.5.9.1.)** exceeds **Echo Threshold (2.5.7.3.)**, the echo is accepted as a valid echo and is evaluated.

Values	Range: **0** to **99**
	Default: 5
Related Parameters	Loss of Echo (LOE) Timer (2.3.6.) Confidence (2.5.9.1.)

Use this feature when an incorrect material level is reported.

CLEF Range (2.5.7.4.)

Note

CLEF Range is referenced from Low Calibration Point (process empty level).

The CLEF algorithm is used mainly to allow correct level reporting for low dK materials which may otherwise cause an incorrect reading in an empty or almost empty vessel.

It is used from Low Calibration Point (process empty level) up to the level defined by CLEF Range (see illustration below). Above that point the Center algorithm is used. For more detail see CLEF Range (Page 244).

Values	Range: **0** to **20** m (0 to 65.6 ft)
	Default: 0.0 m
Related parameters	Position Detect (2.5.7.2.)

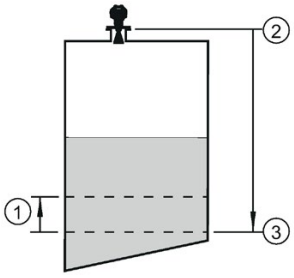

① CLEF Range
② Sensor reference point
③ Low calibration point (process empty level)

In applications with low dK materials we recommend setting CLEF Range to 0.5 m (1.64 ft) and **Position Detect (2.5.7.2.)** to Hybrid.

Sampling (2.5.8.)

Provides a method of checking the reliability of a new echo before accepting it as the valid reading, based on numbers of samples above or below the currently selected echo.

Echo Lock (2.5.8.1.)

Note

Ensure the agitator is always running while SITRANS LR250 is monitoring the vessel, to avoid stationary blade detection.

Selects the measurement verification process. See **Echo Lock (2.5.8.1.)** for more details.

Options		Lock Off (no verification)
		Maximum Verification
	*	Material Agitator
		Total Lock
Related parameters		Fill Rate per Minute (2.3.8.2.) Empty Rate per Minute (2.3.8.3.) Up Sampling (2.5.8.2.) Down Sampling (2.5.8.3.)

For radar applications, Material Agitator is the most often-used setting, to avoid agitator blade detection.

Sampling Up (2.5.8.2.)

Specifies the number of consecutive echoes that must appear above the echo currently selected, before the measurement is accepted as valid.

Values	Range: **1** to **50**
	Default: 5

Down Sampling (2.5.8.3.)

Specifies the number of consecutive echoes that must appear below the echo currently selected, before the measurement is accepted as valid.

Values	Range: **1** to **50**
	Default: 2 (see Related parameters)
Related parameters	Echo Lock (2.5.8.1.) If Echo Lock set to any value other than its default (2), then Down Sampling default = 5.

Echo Quality (2.5.9.)

Confidence (2.5.9.1.)

Indicates echo reliability: higher values represent better echo quality. The display shows the echo confidence of the last measurement. **Echo Threshold (2.5.7.3.)** defines the minimum criterion for echo confidence.

Values (view only)	**0** to **99**
Related Parameters	Echo Threshold (2.5.7.3.)

Open the menu **Device – Echo Profile Utilities** and click on the tab **Echo Profile**.

Echo Strength (2.5.9.2.)

Displays the absolute strength (in dB above 1 µV rms) of the echo selected as the measurement echo.

Values (view only)	Range: **–20** to **99**

TVT (Auto False Echo Suppression) Setup (2.5.10.)

Note

- Make sure material level is below all known obstructions when Auto False Echo Suppression is used to learn the echo profile. (An empty or almost empty vessel is recommended.)
- Note the distance to material level when Auto False Echo learns the environment. Set Auto False Echo Suppression Range to a shorter distance to avoid the material echo being screened out.
- Set Auto False Echo Suppression and Auto False Echo Suppression Range during startup, if possible.
- If the vessel contains an agitator it should be running.
- Before adjusting these parameters, rotate the instrument for best signal (lower false-echo amplitude).

Auto False Echo Suppression (2.5.10.1.)

Used together with **Auto False Echo Suppression Range (2.5.10.2.)** to screen out false echoes in a vessel with known obstructions. A 'learned TVT' (time varying threshold) replaces the default TVT over a specified range. See Auto False Echo Suppression (Page 245) for a more detailed explanation.

Before Auto False Echo Suppression

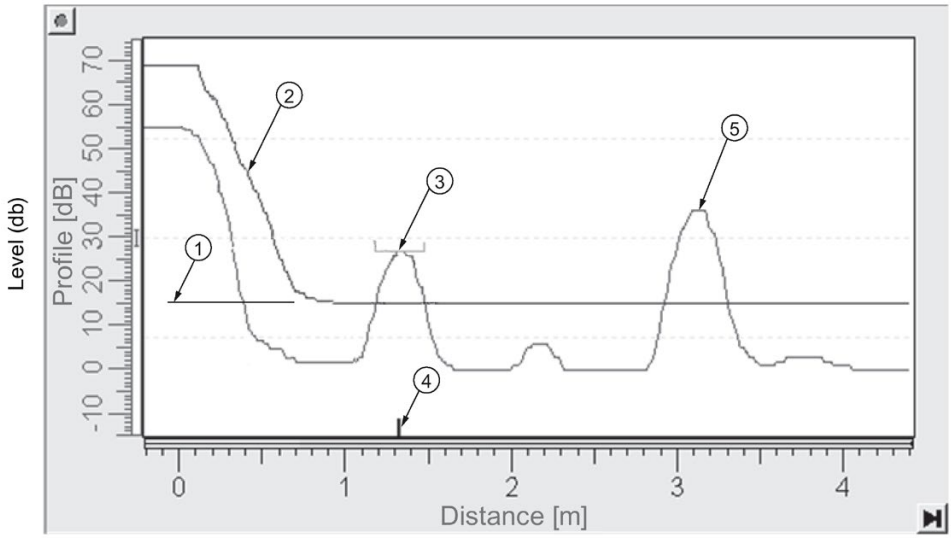

① TVT Hover Level
② default TVT
③ false echo
④ echo marker
⑤ material level

1. Determine Auto False Echo Suppression Range. Measure the actual distance from the sensor reference point to the material surface using a rope or tape measure.
2. Subtract 0.5 m (20") from this distance, and use the resulting value.

After Auto False Echo Suppression

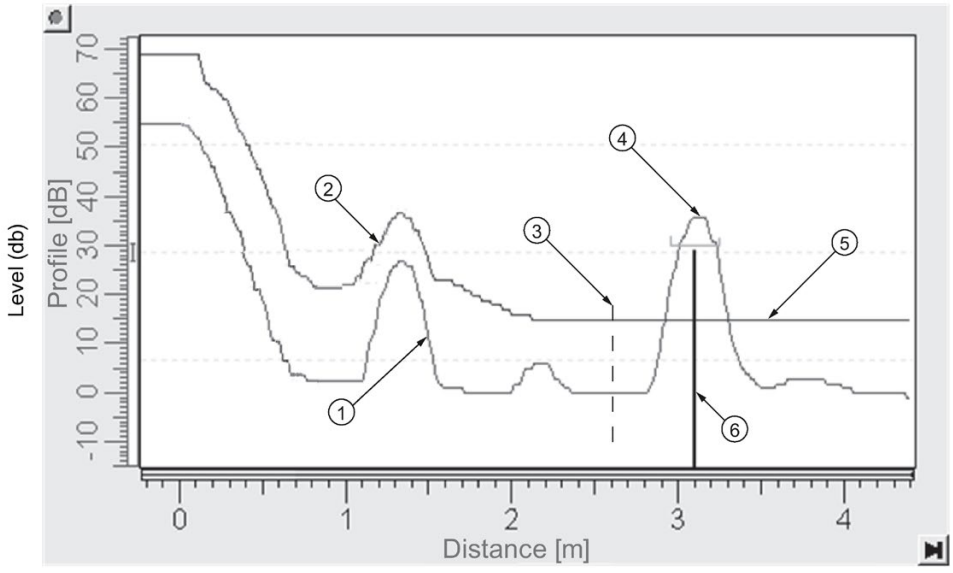

① false echo
② learned TVT
③ Auto False Echo Suppression Range
④ material level
⑤ default TVT
⑥ echo marker

To use Auto False Echo Suppression via AMS Device Manager note value calculated in step 1 and see Auto False Echo Suppression (Page 86).

Auto False Echo Suppression Range (2.5.10.2.)

Defines the endpoint of the Learned TVT distance. Units are defined in **Unit (2.3.1.)**.

Values	Range: **0.00** to **30.00** m
	Default: 1.00 m

1. Press **RIGHT arrow** to open Edit mode.
2. Enter the new value and press **RIGHT arrow** to accept it.
3. Set **Auto False Echo Suppression (2.5.10.1.)**.

Hover Level (2.5.10.3.)

Defines how high the TVT (Time Varying Threshold) is placed above the noise floor of the echo profile, as a percentage of the difference between the peak of the largest echo in the profile and the noise floor. See **Auto False Echo Suppression (2.5.10.1)** for an illustration.

Values	Range: **0** to **100**%
	Default: 40%

When the device is located in the center of the vessel, the TVT hover level may be lowered to increase the confidence level of the largest echo.

Shaper Mode (2.5.10.4.)

Enables/disables **TVT shaper (2.5.11.)**

Options		ON
	*	OFF

TVT Shaper (2.5.11.)

Note

- The range is –100 to +100 bits. With 2 bits per dB this gives a range of –50 to +50 dB.
- **Shaper Mode (2.5.10.4.)** must be turned **ON** in order for TVT shaper points to be transferred.

Adjusts the TVT (Time Varying Threshold) at a specified range (breakpoint on the TVT). This allows you to reshape the TVT to avoid unwanted echoes. There are 40 breakpoints arranged in 5 groups. (We recommend using SIMATIC PDM to access this feature.)

To use TVT shaper via LUI (local user interface):

1. Go to **Shaper Mode (2.5.10.4.)** and select **On**.
2. In TVT shaper, go to Breakpoint **1-9 (2.5.11.1.)**.

3. Open Breakpoint 1 and enter the TVT Offset value (between –50 and 50).
4. Go to the next Breakpoint and repeat step 3 until all desired breakpoint values have been entered.

Breakpoint 1-9 (2.5.11.1.)

Values	Range: **–100** to **+100** bits (equivalent to – 50 to +50 dB)
	Default: 0 dB

Breakpoint 10-18 (2.5.11.2.)

Values	Range: **–100** to **+100** bits (equivalent to – 50 to +50 dB)
	Default: 0 dB

Breakpoint 19-27 (2.5.11.3.)

Values	Range: **–100** to **+100** bits (equivalent to – 50 to +50 dB)
	Default: 0 dB

Breakpoint 28-36 (2.5.11.4.)

Values	Range: **–100** to **+100** bits (equivalent to – 50 to +50 dB)
	Default: 0 dB

Breakpoint 37-40 (2.5.11.5.)

Values	Range: **–100** to **+100** bits (equivalent to – 50 to +50 dB)
	Default: 0 dB

To access TVT Shaper via AMS Device Manager see TVT Shaper (Page 86).

AIFB1 (2.6.)

Note

- Default settings in the parameter tables are indicated with an asterisk (*) unless explicitly stated.
- All AIFB parameters are read only via LUI and AMS Device Manager, and can only be changed using a remote host such as DeltaV or NI-FBUS Configurator.
- AIFB 1 and AIFB 2 are not active out of the box. These blocks will show Out of Service on the LCD at startup. If these blocks are needed for an FF application, use a tool such as DeltaV or NI-FBUS Configurator to configure and schedule the blocks. See **Configuration** in manual *Foundation Fieldbus for Level Instruments* (7ML19985MP01) for further details.

Static Revision Number (2.6.1.)

The revision level of the static data associated with Analog Input Function Block 1. The Static Revision No. is updated whenever a configuration parameter is changed.

Mode (2.6.2.)

Used to request an operating mode from the Analog Input Function Block.

Options	Auto Mode (AUTO)
	Manual Mode (MAN)
	Out of Service (OOS)

Allows you to put the SITRANS LR250 into Out of Service Mode and then reset it to Auto Mode. Manual Mode can be used when simulating output. See **Simulation** in manual *Foundation Fieldbus for Level Instruments* (7ML19985MP01) for more details.

Channel (2.6.3.)

Used to select between the different Level Transducer Block outputs.

Options		**Description**	**Reference point**
LEVEL/VOLUME		Level value converted to Volume [through **Linearization (2.4.)**]	Low Calibration Point
LEVEL	*	Level value	Low Calibration Point
DISTANCE		Distance value	Sensor Reference Point

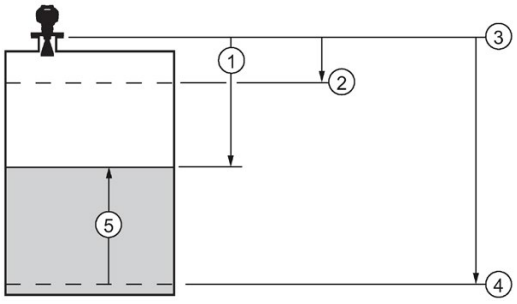

① Distance
② High Calibration Point (process full level)
③ Sensor reference point [a)]
④ Low Calibration Point (process empty level)
⑤ Level

[a)] The point from which High and Low Calibration points are referenced: see Dimension drawings (Page 195) and Threaded Horn Antenna with extension (Page 195).

Input Scaling (2.6.4.)

Lower Value (2.6.4.1.)

Defines the operational lower range value of the input value (Process Value Scale) in PV (volume/level) Units. Process Value Scale normalizes the input value to a customer-defined range.

Values	Range: **-999999** to **999999**
	Default: 0 %

Upper Value (2.6.4.2.)

Defines the operational upper range value of the input value (Process Value Scale) in PV (volume/level) Units. Process Value Scale normalizes the input value to a customer-defined range.

Values	Range: **-999999** to **999999**
	Default: 100 %

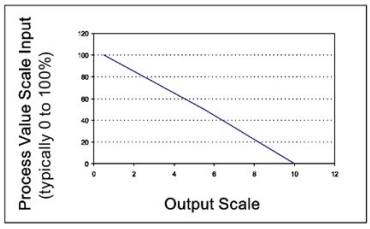

Provides Output values
(Out) to AIFB 1 or AIFB 2

Unit (2.6.4.3.)

Engineering unit to be displayed with the output value.

Values		m, cm, mm, ft, in, cu m, L, HL, cu in, cu ft, cu yd, gal, imp gal, bushels, Bbl, Bbl liquid, percent, PA, Follow out unit
	*	%

Decimal Point (2.6.4.4.)

Read only. The number of digits to display after the decimal point (set to 0 decimal places).

Output Scaling (2.6.5.)

Scales the Process Variable. The function block parameter OUT SCALE contains the values of the lower limit and upper limit effective range in AIFB 1 units.

Lower Value (2.6.5.1.)

Defines the operational lower range value of the output value in AIFB 1 units.

Values	Range: **-999999** to **999999**
	Default: 0%

Upper Value (2.6.5.2.)

Defines the operational upper range value of the output value in AIFB1 units.

Values	Range: **-999999** to **999999**
	Default: 100%

Unit (2.6.5.3.)

Engineering unit to be displayed with the output value.

Values		m, cm, mm, ft, in, cu m, L, HL, cu in, cu ft, cu yd, gal, imp gal, bushels, Bbl, Bbl liquid, percent, PA, Follow out unit
	*	%

Decimal Point (2.6.5.4.)

Read only. The number of digits to display after the decimal point (set to two decimal places).

Alarms and Warnings (2.6.6.)

High Limit Alarm (2.6.6.1.)

The setting for the upper alarm limit in AIFB1 units.

Values	Range: **-Infinity** to **Infinity**
	Default: Inf

High Limit Warning (2.6.6.2.)

The setting for the upper warning limit in AIFB1 units.

Values	Range: **-Infinity** to **Infinity**
	Default: Inf

Low Limit Warning (2.6.6.3.)

The setting for the lower warning limit in AIFB1 units.

Values	Range: **-Infinity** to **Infinity**
	Default: -Inf

Low Limit Alarm (2.6.6.4.)

The setting for the lower alarm limit in AIFB1 units.

Values	Range: **-Infinity** to **Infinity**
	Default: -Inf

Limit Hysteresis (2.6.6.5.)

Hysteresis is used to adjust the sensitivity of the trigger for alarm messages. It is used to compensate when a process variable fluctuates around the same value as a limit. A high level alarm occurs when a value exceeds an upper limit. The alarm's status remains true until the value drops below the limit minus the alarm hysteresis. The directions are reversed for low limit detection.

Values	Range: **0** to **50**
	Default: 0.50

Enter a value for the hysteresis here, to be used for all warnings and alarms. The units are the same as the Output scale, i.e. AIFB1 units.

Display (2.6.7.)

Filter Time Constant (2.6.7.1.)

The time constant for the damping filter. The damping filter smooths out the response to a sudden change in level. This is an exponential filter and the engineering unit is always in seconds. See Damping (Page 247) for more detail.

Values	Range: **0** to **600** s
	Default: 0 [a)]

a) To meet accuracy specification, Filter Time Constant (PV_FTIME) must be changed from default of 0.0 s to a minimum of 10.0 seconds [see Performance (Page 187)].

AIFB 2 (2.7.)

See **AIFB1 (2.6.):** the parameters for **AIFB 2** are identical to **AIFB 1**.

Measured Values (2.8.)

(for diagnostic purposes)

Read only. Allows you to view measured values for diagnostic purposes.

Main Output (PV - Primary Value) (2.8.1.)

The value for level, or volume (if volume conversion is selected).

In AMS Device Manager, see Process Variables Level Transducer Block-LTB (Page 110).

Output, no linearization (SV1 - Secondary Value 1) (2.8.2.)

The value for level.

Output, no level offset (SV2 - Secondary Value 2) (2.8.3.)

The value for distance.

Diagnostics (3.)

Echo Profile (3.1.)

Allows you to request the current echo profile via the handheld programmer, or via AMS Device Manager. For more detail see Echo Processing (Page 240).

To request a profile via AMS Device Manager:

See Echo Profile (Page 88).

To request a profile via the handheld programmer:

1. Navigate to **Level Meter > Diagnostics (3.) > Echo Profile (3.1.)**.
2. Press RIGHT arrow to request a profile. [See Requesting an Echo Profile (Page 61) for more details.]

Fault Reset (3.2.)

Clears faults (see chart below).

Clearing a fault in one parameter of a 'maintenance pair', automatically clears a fault in the second parameter of the pair. For example, entering S3 or S4 will clear a fault on Device Lifetime Reminder 1 (Maintenance Required), and on Device Lifetime Reminder 2 (Maintenance Demanded). This applies when clearing faults via the handheld programmer, or the 375 Field Communicator.

Fault code	Description
S3	Device Lifetime Reminder 1 (Maintenance Required)
S4	Device Lifetime Reminder 2 (Maintenance Demanded)
S6	Sensor Lifetime Reminder 1 (Maintenance Required)
S7	Sensor Lifetime Reminder 2 (Maintenance Demanded)
S8	Device Service Reminder 1 (Maintenance Required)
S9	Device Service Reminder 2 (Maintenance Demanded)
S12	Internal Temperature High
S17	Calibration Schedule Reminder 1 (Maintenance Required)
S18	Calibration Schedule Reminder 2 (Maintenance Demanded)

To clear a fault using the handheld programmer:

- Enter the fault code number then press **RIGHT arrow** .

Electronics Temperature (3.3.)

To access the following parameters via AMS Device Manager see **Electronics Temperature** under Maintenance & Diagnostics (LTB) (Page 89).

Minimum Value (3.3.1.)

The minimum recorded internal electronics temperature, reported in units defined in **Temperature Units (2.3.4.)**.

Maximum Value (3.3.2.)

The maximum recorded internal electronics temperature, reported in units defined in **Temperature Units (2.3.4.).**

Peak Values (3.4.)

Minimum Measured Value (3.4.1.)

The minimum recorded Sensor value, reported in units defined in **Unit (2.3.1.)**.

Maximum Measured Value (3.4.2.)

The maximum recorded Sensor value, reported in units defined in **Unit (2.3.1.)**.

Service (4.)

Note

Default settings in the parameter tables are indicated with an asterisk (*) unless explicitly stated.

Master Reset (4.1.)

Note

- The following parameters are not reset by any reset type: Write Protection, PIN to Unlock, Auto False Echo Suppression Range, Learned TVT.
- While an FF Object Dictionary Reset is in progress, do not perform an action using the local display interface until the reset is complete. This could cause a temporary loss of communications.

Reset Type	Result
Factory Defaults [a)]	Default. Resets all user parameters to the manufacturer's default settings. Following this type of reset, complete reprogramming is required.
Standard Defaults	Resets all parameters to standard default settings.
Informational	Resets parameters such as Block Descriptor, Strategy, Device Install Date, Device Message.
Functional [a)]	Resets parameters that control device behavior and functionality (such as Low Calibration Point).

Reset Type	Result
Warm Start	Has the same effect as recycling power to the device.
FF Object Dictionary	Resets the FF standard block profile parameters (such as block tags) to their specified defaults. This option also clears any function block parameters and device schedule [b] set by the user.

[a] The only difference between Factory Defaults and Functional reset is that Factory Defaults resets maintenance parameters, such as device and sensor wear, calibration and maintenance timers. Functional reset does not reset these parameters.

[b] See **Data transmission** in manual *Foundation Fieldbus for Level Instruments* (7ML19985MP01) for further details.

To access via AMS Device Manager see Master Reset under Operation (RESOURCE) (Page 98).

To perform a reset via the handheld programmer:

1. Press **RIGHT arrow** to open Edit Mode then scroll down to the desired reset type and press RIGHT arrow to select it.
2. Press **LEFT arrow** to exit.

After performing a master reset, the device will stop measuring, the Resource and Level Transducer Blocks will go to **Out of Service**, and the LUI will show the **Quick Start Wizard** until the device is configured.

Remaining Device Lifetime (4.2.)

Note

- Default settings in the parameter tables are indicated with an asterisk (*) unless explicitly stated.
- Four sets of parameters allow you to monitor the Device/Sensor Lifetimes and set up Maintenance/Service schedules, based on operating hours instead of a calendar-based schedule. See also **Remaining Sensor Lifetime (4.3.)**, **Service Schedule (4.4.)**, and **Calibration Schedule (4.5.)**.
- Performing a reset to **Factory Defaults** will reset all the Maintenance Schedule parameters to their factory defaults.
- The device operates in years. To view Remaining Device Lifetime parameters in hours (via AMS Device Manager only) see **Remaining Device Lifetime** under Maintenance & Diagnostics (RESOURCE) (Page 100).

The device tracks itself based on operating hours and monitors its predicted lifetime. You can modify the expected device lifetime, set up schedules for maintenance alerts, and acknowledge them.

The maintenance warnings and alarms are communicated to the end user through status information. This information can be integrated into any Asset Management system.

To access these parameters via AMS Device Manager see **Remaining Device Lifetime** under Maintenance & Diagnostics (RESOURCE) (Page 100).

Time in operation (4.2.2.)

Read only. The amount of time the device has been operating.

Remaining lifetime (4.2.3.)

Read only. **LIfetime (Expected) (4.2.1.)** less **Time in Operation (4.2.2.).**

Activation of Reminders (4.2.4.)

Allows you to enable a maintenance reminder.

Options		REMinder 1 (Maintenance REQuired)
		REMinder 2 (Maintenance DEManded)
		REMinders 1 AND 2 (Maintenance Required and Maintenance Demanded)
	*	OFF

1. First set the reminder values in **Reminder 1 before Lifetime (Required) (4.2.5.)/Reminder 2 before Lifetime (Demanded) (4.2.6.)**.
2. Select the desired **Activation of Reminders** option.

Reminder 1 before Lifetime (Required) (4.2.5.)

If **Remaining Lifetime (4.2.3.)** is equal to or less than this value, the device generates a Maintenance Required reminder.

Values	Range: 0 to 20 years
	Default: 0.164 years

1. Modify limit values as required.
2. Set **Activation of Reminders (4.2.4.)** to the desired option.

Reminder 2 before Lifetime (Demanded) (4.2.6.)

If **Remaining Lifetime (4.2.3.)** is equal to or less than this value, the device generates a Maintenance Demanded reminder.

Values	Range: 0 to 20 years
	Default: 0.019 years

1. Modify values as required.
2. Set **Activation of Reminders (4.2.4.)** to the desired option.

Maintenance Status (4.2.7.)

Indicates which level of maintenance reminder is active.

To display the level of maintenance reminder that is active in AMS Device Manager see **Extended Diagnostics** under Device Diagnostics [Resource Block - RESOURCE (Page 107)].

Acknowledge Status (4.2.8.)

Indicates which level of maintenance reminder has been acknowledged.

Acknowledge (4.2.9.)

Acknowledges the current maintenance reminder.

To acknowledge a reminder via the handheld programmer:

1. Press **RIGHT arrow** twice to open parameter view and activate **Edit** Mode.
2. Press **RIGHT arrow** to acknowledge the reminder.

Remaining Sensor Lifetime (4.3.)

Note

- Default settings in the parameter tables are indicated with an asterisk (*) unless explicitly stated.
- Four sets of parameters allow you to monitor the Device/Sensor Lifetimes and set up Maintenance/Service schedules, based on operating hours instead of a calendar-based schedule. See also **Remaining Device Lifetime (4.2.), Service Schedule (4.4.)**, and **Calibration Schedule (4.5.)**.
- Performing a reset to Factory Defaults will reset all the Maintenance Schedule parameters to their factory defaults.
- The device operates in years. To view Remaining Sensor Lifetime parameters in hours (via AMS Device Manager only) see **Remaining Sensor Lifetime** in Maintenance & Diagnostics (LTB) (Page 89).

The device monitors the predicted lifetime of the sensor (the components exposed to the vessel environment). You can modify the expected sensor lifetime, set up schedules for maintenance reminders, and acknowledge them.

To access these parameters via AMS Device Manager see **Remaining Sensor Lifetime** in Maintenance & Diagnostics (LTB) (Page 89).

Lifetime (expected) (4.3.1.)

Allows you to override the factory default.

Values	Units: years
	Range: **0** to **20** years
	Default: 10.00 years

Time in Operation (4.3.2.)

The amount of time the sensor has been operating. Can be reset to zero after performing a service or replacing the sensor.

To reset to zero:

- Via the handheld programmer, manually reset **Time in Operation (4.3.2.)** to zero.

Remaining Lifetime (4.3.3.)

Read only. **Lifetime (expected) (4.3.1.)** less **Time in Operation (4.3.2.)**.

Activation of Reminders (4.3.4.)

Allows you to enable a maintenance reminder.

Options		REMinder 1 (Maintenance Required)
		REMinder 2 (Maintenance Demanded)
		REMinders 1 and 2 (Maintenance Required and Maintenance Demanded)
	*	OFF

1. First set the values in **Reminder 1 before Lifetime (Required) (4.3.5.)**/**Reminder 2 before Lifetime(Demanded) (4.3.6.)**.
2. Select the desired **Activation of Reminders** option.

Reminder 1 before Lifetime (Required) (4.3.5.)

If **Remaining Lifetime (4.3.3.)** is equal to or less than this value, the device generates a **Maintenance Required** reminder.

Values	Range: **0** to **20 years**
	Default: 0.164 years

1. Modify limit values as required.
2. Set **Activation of Reminders (4.3.4.)** to the desired option.

Reminder 2 before Lifetime (Demanded) (4.3.6.)

If **Remaining Lifetime (4.3.3.)** is equal to or less than this value, the device generates a **Maintenance Demanded** reminder.

Values	Range: **0** to **20** years
	Default: 0.019 years

1. Modify limit values as required.
2. Set **Activation of Reminders (4.3.4.)** to the desired option.

Maintenance Status (4.3.7.)

Indicates which level of maintenance reminder is active.

To display the level of maintenance reminder in AMS Device Manager see **Extended Diagnostics** under Device Diagnostics (Level Transducer Block - LTB) (Page 103).

Acknowledge Status (4.3.8.)

Indicates which level of maintenance reminder has been acknowledged.

Acknowledge (4.3.9.)

Acknowledges the current maintenance reminder.

To acknowledge a reminder via the handheld programmer:

1. Press **RIGHT arrow** twice to open parameter view and activate **Edit** Mode.
2. Press **RIGHT arrow** to acknowledge the reminder.

Service Schedule (4.4.)

Note

- Default settings in the parameter tables are indicated with an asterisk (*) unless explicitly stated.
- Four sets of parameters allow you to monitor the Device/Sensor Lifetimes and set up Maintenance/Service schedules, based on operating hours instead of a calendar-based schedule. See also **Remaining Device Lifetime (4.2.)**, **Remaining Sensor Lifetime (4.3.)**, and **Calibration Schedule (4.5.)**.
- Performing a reset to **Factory Defaults** will reset all the Maintenance Schedule parameters to their factory defaults.
- The device operates in years. To view Service Interval parameters in hours or days (via AMS Device Manager only) see **Service Schedule (4.4.1.)**.

The device tracks service intervals based on operating hours and monitors the predicted lifetime to the next service. You can modify the Total Service Interval, set schedules for maintenance reminders, and acknowledge them.

The maintenance warnings and alarms are communicated to the end user through status information. This information can be integrated into any Asset Management system.

To access these parameters via AMS Device Manager see **Service Schedule** under Maintenance & Diagnostics (LTB) (Page 89).

Service Interval (4.4.1.)

User-configurable recommended time between product inspections.

Values	Units: years
	Range: **0** to **20** years
	Default: 1.0 year

Time Since Last Service (4.4.2.)

Time elapsed since last service. Can be reset to zero after performing a service.

To reset to zero:

- Via the handheld programmer, manually reset **Time Since Last Service (4.4.2.)** to zero.

Time Until Next Service (4.4.3.)

Read only. **Service Interval (4.4.1.)** less **Time Since Last Service (4.4.2.)**.

Activation of Reminders (4.4.4.)

Allows you to enable a maintenance reminder.

Options	*	Timer OFF
		ON NO LIMITS
		ON - REMinder 1 (Maintenance Required) checked
		ON - REMinders 1 and 2 checked
		ON - REMinder 2 (Maintenance Demanded) checked

1. First set the values in **Reminder 1 before Service (Required) (4.4.5.)**/**Reminder 2 before Service (Demanded) (4.4.6.)**.
2. Select the desired **Activation of Reminders** option.

Reminder 1 before Service (Required) (4.4.5.)

If **Time Until Next Service (4.4.3.)** is equal to or less than this value, the device generates a **Maintenance Required** reminder.

Values	Range: **0** to **20** years
	Default: 0.164 years

1. Modify limit values as required.
2. Set **Activation of Reminders (4.4.4.)** to the desired option.

Reminder 2 before Service (Demanded) (4.4.6.)

If **Time Until Next Service (4.4.3.)** is equal to or less than this value, the device generates a **Maintenance Demanded** reminder.

Values	Range: **0** to **20** years
	Default: 0.019 years

1. Modify values as required
2. Set **Activation of Reminders (4.4.4.)** to the desired option.

Maintenance Status (4.4.7.)

Indicates which level of maintenance reminder is active.

To display the level of maintenance reminder in AMS Device Manager see **Extended Diagnostics** under Device Diagnostics (Level Transducer Block - LTB) (Page 103).

Acknowledge Status (4.4.8.)

Indicates which level of maintenance reminder has been acknowledged.

Acknowledge (4.4.9.)

Acknowledges the current maintenance reminder.

To acknowledge a reminder via the handheld programmer:

1. Press **RIGHT** arrow twice to open parameter view and activate **Edit** Mode.
2. Press **RIGHT** arrow to acknowledge the reminder.

Calibration Schedule (4.5.)

Note

- Default settings in the parameter tables are indicated with an asterisk (*) unless explicitly stated.
- Four sets of parameters allow you to monitor the Device/Sensor Lifetimes and set up Maintenance/Service schedules, based on operating hours instead of a calendar-based schedule. See also **Remaining Device Lifetime (4.2.)**, **Remaining Sensor Lifetime (4.3.)**, and **Service Schedule (4.4.)**.
- Performing a reset to **Factory Defaults** will reset all the Maintenance Schedule parameters to their factory defaults.
- The device operates in years. To view Calibration Interval parameters in hours (via AMS Device Manager only) see **Calibration Schedule** under Maintenance & Diagnostics (RESOURCE) (Page 100).

The device tracks calibration intervals based on operating hours and monitors the predicted lifetime to the next calibration. You can modify the Total Calibration Interval, set schedules for maintenance reminders, and acknowledge them.

To access these parameters via AMS Device Manager see **Calibration Schedule** under Maintenance & Diagnostics (RESOURCE) (Page 100).

Calibration Interval (4.5.1.)

User-configurable recommended time between product calibrations.

Values	Units: years
	Range: **0** to **20** years
	Default: 1.0 year

Time Since Last Calibration (4.5.2.)

Time elapsed since last calibration. Can be reset to zero after performing a calibration.

To reset to zero:

- Via the handheld programmer, manually reset **Time Since Last Calibration (4.5.2.)** to zero.

Time Until Next Calibration (4.5.3.)

Read only. **Calibration Interval (4.5.1.)** less **Time Since Last Calibration (4.5.2.)**.

Activation of Reminders (4.5.4.)

Allows you to enable a maintenance reminder.

Options	*	Timer OFF
		ON NO LIMITS
		ON - REMinder 1 (Maintenance Required) checked
		ON - REMinders 1 and 2 checked
		ON—REMinder 2 (Maintenance Demanded) checked

1. First set the limit values in **Reminder 1 before Calibration (Required) (4.5.5.)**/**Reminder 2 before Calibration (Demanded) (4.5.6.)**.
2. Select the desired **Activation of Reminders** option.

Reminder 1 before Calibration (Required) (4.5.5.)

If **Time Until Next Calibration (4.5.3.)** is equal to or less than this value, the device generates a **Maintenance Required** reminder.

Values	Range: **0** to **20** years
	Default: 0.164 years

1. Modify limit values as required.
2. Set **Activation of Reminders (4.5.4.)** to the desired option.

Reminder 2 before Calibration (Demanded) (4.5.6.)

If **Time Until Next Calibration (4.5.3.)** is equal to or less than this value, the device generates a **Maintenance Demanded** reminder.

Values	Range: **0** to **20** years
	Default: 0.019 years

1. Modify limit values as required.
2. Set **Activation of Reminders (4.5.4.)** to the desired option.

Maintenance Status (4.5.7.)

Indicates which level of maintenance reminder is active.

To display the level of maintenance reminder that is active in AMS Device Manager see **Extended Diagnostics** under Device Diagnostics (Resource Block - RESOURCE) (Page 107).

Acknowledge Status (4.5.8.)

Indicates which level of maintenance reminder has been acknowledged.

Acknowledge (4.5.9.)

Acknowledges the current maintenance reminder.

To acknowledge a reminder via the handheld programmer:

1. Press **RIGHT** **arrow** twice to open parameter view and activate **Edit** Mode.
2. Press **RIGHT** **arrow** to acknowledge the reminder.

Manufacture Date (4.6.)

Read only. The date of manufacture of the SITRANS LR250 (mm/dd/yyyyhh.mm).

Powered Hours (4.7.)

Read only. Displays the number of hours the unit has been powered up since manufacture.

To view via AMS Device Manager see **Wear** under Maintenance & Diagnostics (RESOURCE) (Page 100).

Power-on Resets (4.8.)

Read only. The number of power cycles that have occurred since manufacture.

To view via AMS Device Manager see **Wear** under Maintenance & Diagnostics (RESOURCE) (Page 100).

LCD Fast Mode (4.9.)

Note

- LCD Fast Mode takes effect only after 30 minutes of inactivity. (Each time the device is powered up, a further 30 minutes of inactivity is required.)
- LCD Fast Mode affects Measurement mode only; it has no effect on Navigation mode.

Enables a faster rate of measurement from the device by disabling most of the display area. Only the bar graph will be refreshed when LCD Fast Mode is set to ON.

Values	*	OFF
		ON

LCD Contrast (4.10.)

The factory setting is for optimum visibility at room temperature and in average light conditions. Extremes of temperature will lessen the contrast.

Values	Range: **0** (low contrast) to **20** (high contrast). Default: 10

Adjust the value to improve visibility at room temperature and in average light conditions. Change the value in small steps to ensure you can continue to read the display.

Secondary Value (4.11.)

Use the secondary value to capture the menu navigation path to any viewable parameter. Once the navigation path is stored, the value of that parameter will be displayed in **Measurement** mode as the secondary value.

While in Parameter View of the current parameter [see **Parameter View** under LCD Display (Page 51)], press the decimal point key. This stores the path to the current parameter in the Secondary Value, and displays the value for that parameter on the LCD display when in **Measurement** mode. See The LCD Display (Page 51) for an illustration.

Simulate Enable (4.12.)

Replaces a physical jumper switch found on some FF devices to enable simulation when set to ON. (Available only via LUI.)

Options	*	OFF	Simulation Disabled
		ON	Simulation Enabled

For more information on Simulation, see **Simulation (Input)** under Operation (LTB) (Page 79) in AMS Device Manager. [See also **Simulation** under **How the AIFB works** in manual *Foundation Fieldbus for Level Instruments* (7ML19985MP01)].

Communication (5.)

Note

Default settings in the parameter tables are indicated with an asterisk (*) unless explicitly stated.

Tag (5.1.)

Note

The tag can only be changed from a remote master such as NIFBUS-Configurator or DeltaV.

Read only. Text that can be used in any way. A recommended use is as a unique label for a field device in a plant. Limited to 32 ASCII characters.

Device Address (5.2.)

Note

The address can only be changed from a remote master such as NIFBUS-Configurator or DeltaV. See **Addressing** in manual *Foundation Fieldbus for Level Instruments* (7ML19985MP01) for further details.

Read only. The unique address of the device on the network.

Values	Temporary range during initial commissioning: 248 - 251. Permanent range after commissioning complete (written to non-volatile memory in the device): 16-247

Manufacturer (5.3.)

Name of manufacturer associated with this device.

Device Type Identification (5.4.)

Hexadecimal integer defined by Siemens to uniquely identify each product with manufacturer's Id. (LR250 FF device=0x1954.)

Device Revision (5.5.)

Manufacturer's revision number associated with this device.

ITK Version (5.6.)

Major revision number of the interoperability test case used to register this device.

Security (6.)

Note

Default settings in the parameter tables are indicated with an asterisk (*) unless explicitly stated.

Remote Access (6.1.)

Remote Lockout (6.1.1.)

Note

If remote lockout is changed to limit remote access, it can be reset only via the handheld programmer.

Enables or disables programming via the network and AMS Device Manager.

Options	*	OFF (Remote operation enabled)
		ON (Remote operation disabled)

Local Access (6.2.)

Write Protection (6.2.1.)

Note

Do not lose this number value.

Prevents any changes to parameters via AMS Device Manager or the handheld programmer.

Hand-held programmer values		Range: **0** to **9999**	
	*	Unlock value [stored **in PIN to Unlock (6.2.2.)**]	Lock Off
		Any other value	Lock On

- To turn Lock On, key in any value other than the Unlock Value stored in **PIN to Unlock (6.2.2.)**.
- To turn Lock Off, key in the Unlock Value stored in **PIN to Unlock (6.2.2.)**.

To access this parameter via AMS Device Manager see **Local Access** under Security (RESOURCE) (Page 103).

PIN to Unlock (6.2.2.)

Note

- Do not lose your Unlock Value: it cannot be displayed once **Write Protection (6.2.1.)** has been set to a different value.
- A reset to **Factory Defaults** will not restore the unlock value at time of shipping.

Stores the value to be entered in **Write Protection (6.2.1.)** to unlock programming. If **Write Protection (6.2.1.)** is set to a different value, **PIN to Unlock (6.2.2.)** does not display the Unlock value.

Handheld Programmer Values	Range: **0** to **9999**	
	Value when shipped: 1954. Not restored by a reset to Factory Defaults.	
	– – – –	Display when Lock is on

To access this parameter via AMS Device Manager see **Local Access** under Security (RESOURCE) (Page 103).

Local Operation (6.2.3.)

Enables or disables programming via the handheld programmer.

Options		DISABLED
	*	ENABLED

Note

Once disabled via the handheld programmer, the parameter is no longer visible via LUI and can only be reset using AMS Device Manager. However, if no communication activity exists for 30 seconds, the parameter will again be visible via LUI.

To access this parameter via AMS Device Manager see **Local Display** under Setup (LCD) (Page 95).

Language (7.)

Selects the language to be used on the LCD.

Options	*	English
		Deutsch
		Français
		Español
		简体中文

To access this parameter via AMS Device Manager see **Local Display** under Setup (LCD) (Page 95).

8.1 Alphabetical parameter list

Note

For a detailed list of parameters see Parameter Reference (Page 125).

Acknowledge (4.2.9.)

Acknowledge (4.3.9.)

Acknowledge (4.4.9.)

Acknowledge (4.5.9.)

Acknowledge Status (4.2.8.)

Acknowledge Status (4.3.8.)

Acknowledge Status (4.4.8.)

Acknowledge Status (4.5.8.)

AIFB1 (2.6.)

AIFB2 (2.7.)

Alarms and Warnings (2.6.6.)

Algorithm (2.5.7.1.)

Auto False Echo Suppression (2.5.10.1.)

Auto False Echo Suppression Range (2.5.10.2.)

Breakpoints 1-9 (2.5.11.1.)

Breakpoints 10-18 (2.5.11.2.)

Breakpoints 19-27 (2.5.11.3.)

Breakpoints 28-36 (2.5.11.4.)

Breakpoints 37-40 (2.5.11.5.)

Calibration (2.3.7.)

Calibration Interval (4.5.1.)

Calibration Schedule (4.5.)

Channel (2.6.3.)

CLEF (Constrained Leading Edge Fit) Range (2.5.7.4.)

Communication (5.)

Confidence (2.5.9.1.)

Decimal Point (2.6.4.4.)

Decimal Point (2.6.5.4.)

Descriptor (2.1.2.)

Device (2.2.)

Device Address (5.2.)
Device Revision (5.5.)
Device Type Identification (5.4.)
Diagnostics (3.)
Dimension A (2.4.1.3.)
Dimension L (2.4.1.4.)
Display (2.6.7.)
Down Sampling (2.5.8.3.)
Echo Lock (2.5.8.1.)
Echo Profile (3.1.)
Echo Quality (2.5.9.)
Echo Select (2.5.7.)
Echo Strength (2.5.9.2.)
Echo Threshold (2.5.7.3.)
Electronics Temperature (3.3.)
Empty Rate per Minute (2.3.8.3.)
Far Range (2.5.2.)
Fault Reset (3.2.)
Fill Rate per Minute (2.3.8.2.)
Filter Time Constant (2.6.7.1.)
Firmware Revision (2.2.2.)
Hardware Revision (2.2.1.)
High Calibration Pt. (2.3.7.2.)
High Level Point (2.3.7.5.)
High Limit Alarm (2.6.6.1.)
High Limit Warning (2.6.6.2.)
Hover Level (2.5.10.3.)
Input Scaling (2.6.4.)
ITK Version (5.6.)
Language (7.)
LCD Contrast (4.10.)
LCD Fast Mode (4.9.)
Level Offset (2.3.7.6.)
Level Unit (2.3.2.)
Lifetime (expected) (4.2.1.)

Lifetime (expected) (4.3.1.)
Limit Hysteresis (2.6.6.5.)
Linearization (2.4.)
Loader Revision (2.2.3.)
Local Access (6.2.)
Local Operation (6.2.3.)
Loss of Echo (LOE) Timer (2.3.6.)
Low Calibration Point. (2.3.7.1.)
Low Level Point (2.3.7.4.)
Low Limit Alarm (2.6.6.4.)
Low Limit Warning (2.6.6.3.)
Lower Value (2.6.4.1.)
Lower Value (2.6.5.1.)
Main Output (PV– Primary Value) (2.8.1.)
Maintenance Status (4.2.7.)
Maintenance Status (4.3.7.)
Maintenance Status (4.4.7.)
Maintenance Status (4.5.7.)
Manufacturer Date (4.6.)
Manufacturer (5.3.)
Master Reset (4.1.)
Material (2.3.5.)
Maximum Measured Value (3.4.2.)
Maximum Sensor Value (2.5.5.)
Minimum Value (3.3.2.)
Maximum Volume (2.4.1.2.)
Measured Values (2.8.)
Message (2.1.3.)
Minimum Measured Value (3.4.1.)
Minimum Sensor Value (2.5.4.)
Minimum Value (3.3.1.)
Mode (2.6.2.)
Near Range (2.5.1.)
Output Scaling (2.6.5.)
Output, no level offsets (SV2 – Secondary Value 2) (2.8.3.)

Output, no linearization (SV1 – Secondary Value 1) (2.8.2.)
Peak Values (3.4.)
Position Detect (2.5.7.2.)
Powered Hours (4.7.)
Power-on Resets (4.8.)
Propagation Factor (2.5.3.)
PV (volume/level) Units (2.3.3.)
Quick Start (1.)
Rate (2.3.8.)
Remaining Device Lifetime (4.2.)
Remaining Lifetime (4.2.3.)
Remaining Sensor Lifetime (4.3.)
Remaining Lifetime (4.3.3.)
Reminder 1 before Lifetime (Required) (4.2.5.)
Reminder 1 before LIfetime (Required) (4.3.5.)
Reminder 1 before Service (Required) (4.4.5.)
Reminder 1 before Calibration (Required) (4.5.5.)
Reminder 2 before Lifetime (Demanded) (4.2.6.)
Reminder 2 before Lifetime (Demanded) (4.3.6.)
Reminder 2 before Service (Demanded) (4.4.6.)
Reminder 2 before Calibration (Demanded) (4.5.6.)
Remote Access (6.1.)
Remote Lockout (6.1.1.)
Response Rate (2.3.8.1.)
Sampling (2.5.8.)
Secondary Value (4.11.)
Security (6.)
Sensor (2.3.)
Sensor Offset (2.3.7.3.)
Service (4.)
Service Interval (4.4.1.)
Service Schedule (4.4.)
Setup (2.)
Shaper Mode (2.5.10.4.)
Shots (2.5.6.)

Signal Processing (2.5.)

Simulate Enable (4.12)

Static Revision Number (2.6.1.)

Tag (2.1.1.)

Tag (5.1.)

Temperature Units (2.3.4.)

Time Until Next Calibration (4.5.3.)

Time Until Next Service (4.4.3.)

TVT (Auto False Echo Suppression) setup (2.5.10.)

TVT Shaper (2.5.11.)

Unit (2.3.1.)

Unit (2.6.4.3.)

Unit (2.6.5.3.)

Up Sampling (2.5.8.2.)

Upper Value (2.6.4.2.)

Upper Value (2.6.5.2.)

Vessel Shape (2.4.1.1.)

Volume (2.4.1.)

Write Protection (6.2.1.)

X value (2.4.1.6.)

XY index (2.4.1.5.)

Y value (2.4.1.7.)

Service and maintenance

9

9.1 Basic safety information

⚠ WARNING

Impermissible repair of the device

- Repair must be carried out by Siemens authorized personnel only.

⚠ CAUTION

Releasing button lock

Improper modification of parameters could influence process safety.

- Make sure that only authorized personnel may cancel the button locking of devices for safety-related applications.

9.2 Cleaning

The radar device requires no cleaning under normal operating conditions.

Under severe operating conditions, the antenna may require periodic cleaning. If cleaning becomes necessary:

- Note the antenna material and the process medium, and select a cleaning solution that will not react adversely with either.
- Remove the device from service and wipe the antenna clean using a cloth and suitable cleaning solution.

NOTICE

Penetration of moisture into the device

Device damage.

- Make sure when carrying out cleaning and maintenance work that no moisture penetrates the inside of the device.

WARNING

Electrostatic charge

Danger of explosion in hazardous areas if electrostatic charges develop, for example, when cleaning plastic surfaces with a dry cloth.

- Prevent electrostatic charging in hazardous areas.

9.3 Maintenance and repair work

The device is maintenance-free. However, a periodic inspection according to pertinent directives and regulations must be carried out.

An inspection can include check of:

- Ambient conditions
- Seal integrity of the process connections, cable entries, and cover screws
- Reliability of power supply, lightning protection, and grounds

WARNING

Maintenance during continued operation in a hazardous area

There is a risk of explosion when carrying out repairs and maintenance on the device in a hazardous area.

- Isolate the device from power.

- or -

- Ensure that the atmosphere is explosion-free (hot work permit).

WARNING

Humid environment

Risk of electric shock.

- Avoid working on the device when it is energized.
- If working on an energized device is necessary, ensure that the environment is dry.
- Make sure when carrying out cleaning and maintenance work that no moisture penetrates the inside of the device.

9.3.1 Unit repair and excluded liability

All changes and repairs must be done by qualified personnel, and applicable safety regulations must be followed. Please note the following:

- The user is responsible for all changes and repairs made to the device.
- All new components must be provided by Siemens.
- Restrict repair to faulty components only.
- Do not re-use faulty components.

9.3.2 Part replacement

If the antenna, lens, secondary O-ring, and spring washers require replacement due to damage or failure, they may be replaced without the need for re-calibration if of the same type and size.

Replacing the antenna

Changing to a different antenna type may be performed by a Siemens authorized repair center or personnel.

If the electronics or enclosure require replacement due to damage or failure, please ensure the correct antenna version is used, otherwise a re-calibration will need to be performed by Siemens authorized personnel.

Replacing the lens

1. Remove existing lens by turning it counter-clockwise until it separates from the unit.
2. Replace the O-ring between the lens and process connection with a new one.
3. Carefully thread the replacement lens, and turn it clockwise until resistance is encountered.
   Do not over-tighten the lens, as this will permanently damage it.
4. For flange installation instructions, see Flanged versions (Page 33).

Note

After installation of the new lens onto the flanged encapsulated antenna version and before mounting on the vessel/tank, some lenses may not appear to lie flush on the device, but this is normal and will not impact performance.

Raised-Face flange kits

Description	Process connection size	Part number
Replacement TFM™ 1600 PTFE Lens and Spring Washer Kit for ASME B16.5 Class 150 raised faced	2"	A5E32462817
	3"	A5E32462819
	4"	A5E32462820
	6"	A5E32462821
Replacement TFM™ 1600 PTFE Lens and Spring Washer Kit for JIS B 2220 10K raised Face	50A	A5E32462822
	80A	A5E32462823
	100A	A5E32462824
	150A	A5E32462825
Replacement TFM™ 1600 PTFE Lens and Spring Washer Kit for EN 1092-1 PN10/16 type B1 raised face	DN50	A5E32462826
	DN80	A5E32462827
	DN100	A5E32462828
	DN150	A5E32462829

Spare part kits

Description	Process connection size	Part number
ISO2852, Hygienic encapsulated antenna Lens and silicon O-ring	2"	A5E32572731
	3"	A5E32572745
	4"	A5E32572747
DIN11851, Hygienic encapsulated antenna Lens and silicon O-ring	DN50	A5E32572758
	DN80	A5E32572770
	DN100	A5E32572772
DIN11864-1, Hygienic encapsulated antenna Lens and silicon O-ring	DN50	A5E32572773
	DN80	A5E32572779
	DN100	A5E32572782
DIN11864-2/3, Hygienic encapsulated antenna Lens and silicon O-ring	DN50	A5E32572785
	DN80	A5E32572790
	DN100	A5E32572791
Tuchenhagen, Hygienic encapsulated antenna Lens and silicon O-ring	Type F	A5E32572794
	Type N	A5E32572795

Note

For more information about accessories such as clamps, seals and process connections, please see the catalog on the product page (http://www.siemens.com/LR250) (http://www.siemens.com/LR250).

9.4 Disposal

Devices described in this manual should be recycled. They may not be disposed of in the municipal waste disposal services according to the Directive 2012/19/EC on waste electronic and electrical equipment (WEEE).

Devices can be returned to the supplier within the EC, or to a locally approved disposal service for eco-friendly recycling. Observe the specific regulations valid in your country.

Further information about devices containing batteries can be found at: Information about battery / product return (WEEE) (https://support.industry.siemens.com/cs/document/109479891/)

9.5 Return procedure

Enclose the bill of lading, return document and decontamination certificate in a clear plastic pouch and attach it firmly to the outside of the packaging.

Required forms

- Delivery note
- Return goods delivery note (http://www.siemens.com/processinstrumentation/returngoodsnote)

  with the following information:

  – Product (item description)

  – Number of returned devices/replacement parts

  – Reason for returning the item(s)
- Decontamination declaration (http://www.siemens.com/sc/declarationofdecontamination)

  With this declaration you warrant "that the device/replacement part has been carefully cleaned and is free of residues. The device/replacement part does not pose a hazard for humans and the environment."

  If the returned device/replacement part has come into contact with poisonous, corrosive, flammable or water-contaminating substances, you must thoroughly clean and decontaminate the device/replacement part before returning it in order to ensure that all hollow areas are free from hazardous substances. Check the item after it has been cleaned.

  Any devices/replacement parts returned without a decontamination declaration will be cleaned at your expense before further processing.

Diagnosing and troubleshooting

10

1. Check the following:
   - There is power at the device.
   - The LCD shows the relevant data.
   - If any fault codes are being displayed see General Fault Codes (Page 179) for a detailed list.
2. Verify that the wiring connections are correct.
3. See the table below for specific symptoms.

Symptom	Corrective action
The device cannot be programmed via FF.	• Make sure **Remote Lockout (6.1.1.)** is set to the unlock value • Ensure block is Out of Service
You try to set a SITRANS LR250 parameter via remote communications but the parameter remains unchanged.	• Ensure **Remote Lockout (6.1.1.)** is disabled. • Ensure **Write Protection (6.2.1.)** is set to the unlock value. • Ensure block is Out of Service
The AIFB output equals the display value but does not correspond to actual material level.	• Ensure the Channel selection and Scaling in AIFB 1 are correctly entered • Ensure AIFBs are scheduled and in Auto mode • Ensure High Calibration Point is correctly entered • View the echo profile to see if the wrong echo is being selected. If so, see Operation Troubleshooting (Page 184) for possible causes and corrective action
The AIFB output is not equal to the displayed value (regardless of actual material level).	• Confirm you are looking at the AIFB Output • Ensure AIFBs are scheduled and in Auto mode • Ensure scaling has not been programmed into the controller: all scaling should be performed by the LR250 • Check the network to ensure the controller is communicating with the LR250
Not able to change parameters via LUI.	• Ensure **Local Operation (6.2.3.)** is enabled
Not able to change parameters, such as low calibration point.	• Ensure block is in Out of Service mode

If you continue to experience problems go to our website and check the FAQs for SITRANS LR250:

Product page (http://www.siemens.com/LR250), or contact your Siemens representative.

10.1 Device status icons

Icon	Priority Level	Meaning
	1	• Maintenance alarm • Measurement values are not valid
	2	• Maintenance warning: maintenance demanded immediately • Measured signal still valid
	3	• Maintenance required • Measured signal still valid
	1	• Process value has reached an alarm limit
	2	• Process value has reached a warning limit
	3	• Process value has reached a tolerance limit
	1	• Configuration error • Device will not work because one or more parameters/components is incorrectly configured
	2	• Configuration warning • Device can work but one or more parameters/components is incorrectly configured
	3	• Configuration changed • Device parameterization not consistent with parameterization in project. Look for info text.
	1	• Manual operation (local override) • Communication is good; device is in manual mode.
	2	• Simulation or substitute value • Communication is good; device is in simulation mode or works with substitute values.
	3	• Out of operation • Communication is good; device is out of action.
		• No data exchange
		• Write access enabled
		• Write access disabled

10.2 General fault codes

Note

- If more than one fault is present, the device status indicator and text for each fault alternate at 2 second intervals.

Code/ Icon	Meaning	Corrective Action
S: 0	The device was unable to get a measurement within the Fail-safe LOE Timer period. Possible causes: faulty installation, antenna material buildup, foaming/other adverse process conditions, invalid configuration range.	• Ensure installation details are correct. • Ensure no antenna material buildup. Clean if necessary. • Adjust process conditions to minimize foam or other adverse conditions. • Correct configuration range. • If fault persists, contact your local Siemens representative.
S: 2	Unable to collect profile because of a power condition that is outside the operating range of the device.	Repair required: contact your local Siemens representative.
S: 3	Device is nearing its lifetime limit as defined in **Remaining Lifetime (4.2.3.)** and has triggered a **Maintenance Required reminder (4.2.5.)**.	Replacement is recommended
S: 4	Device is nearing its lifetime limit as defined in **Remaining Lifetime (4.2.3.)** and has triggered a **Maintenance Demanded reminder (4.2.6.)**.	Replacement is recommended.
S: 6	Sensor is nearing its lifetime limit as defined in **Remaining Lifetime (4.3.3.)** and has triggered a **Maintenance Required reminder (4.3.5.)**.	Replacement is recommended.
S: 7	Sensor is nearing its lifetime limit as defined in **Remaining Lifetime (4.3.3.)** and has triggered a **Maintenance Demanded reminder (4.3.6.)**.	Replacement is recommended.
S: 8	**Service interval (4.4.1.)** has expired and has triggered a **Maintenance Required reminder (4.4.5.)**.	Perform service.
S: 9	**Service interval (4.4.1.)** has expired and has triggered a **Maintenance Demanded reminder (4.4.6.)**.	Perform service.
S: 10	Input parameters **Low Calibration Point (2.3.7.1.)** and **High Calibration Point (2.3.7.2.)** are the same.	• Check calibration settings of device. • Ensure settings for High Calibration Point and Low Calibration Point are different.

S: 11	Internal temperature sensor failure.	Repair required: contact your local Siemens representative.
S: 12	Internal temperature of device has exceeded specifications: it is operating outside its temperature range.	• Relocate device and/or lower process temperature enough to cool device. • Inspect for heat-related damage and contact your local Siemens representative if repair is required. • Fault code will persist until a manual reset is performed using AMS or the LCD interface.
S: 17	**Calibration interval (4.5.1.)** has expired and has triggered a **Maintenance Required reminder (4.5.5.)**.	Perform calibration.
S: 18	**Calibration interval (4.5.1.)** has expired and has triggered a **Maintenance Demanded reminder (4.5.6.)**.	Perform calibration.
S: 22	Time Base Fault	Hardware problem: contact your local Siemens representative.
S: 28	Internal device failure caused by a RAM memory error.	Repair required: contact your local Siemens representative.
S: 29	EEPROM damaged.	Repair required: contact your local Siemens representative
S: 31	Flash error.	Repair required: contact your local Siemens representative
S: 33	Factory calibration for the internal temperature sensor has been lost.	Repair required: contact your local Siemens representative
S: 34	Factory calibration for the device has been lost.	Repair required: contact your local Siemens representative
S: 35	Factory calibration for the device has been lost.	Repair required: contact your local Siemens representative
S: 36	Unable to start microwave module.	Repair required: contact your local Siemens representative

S: 37	Measurement hardware problem.	Repair required: contact your local Siemens representative
S: 38	Microwave module hardware failure: unable to calculate distance measurement.	Repair required: contact your local Siemens representative
S: 43	Factory calibration for the radar receiver has been lost.	Repair required: contact your local Siemens representative.
S: 92	Corrupt Stack	Contact your local Siemens representative and provide configuration file and FB schedule.
S: 93	High Stack	Contact your local Siemens representative and provide configuration file and FB schedule.
S: 94	Data Safe Read	Re-apply configuration and cycle power. If fault persists, contact your local Siemens representative.
S: 95	Data Safe Write	Re-apply configuration and cycle power. If fault persists, contact your local Siemens representative.
S: 96	Safe Process Data Corrupt	Contact your local Siemens representative and provide configuration file and FB schedule.
S: 97	Board Voltage	Hardware problem: contact your local Siemens representative.
S: 98	ADC Failed	Hardware problem: contact your local Siemens representative.
S: 99	Prof. Clip	Hardware problem. If fault persists contact your local Siemens representative.
S: 100	Few Shots	Hardware problem. If fault persists contact your local Siemens representative.

S: 101	Meas. Err.	Reset configuration. If fault persists contact your local Siemens representative and provide configuration file and FB schedule.
S: 102	No Shots	Hardware problem. If fault persists contact your local Siemens representative.
S: 103	Meas. Corrupt	Contact your local Siemens representative and provide configuration file and FB schedule.
S: 104	DMA Error	Hardware problem. If fault persists contact your local Siemens representative.
S: 105	Seq. Corrupt	Contact your local Siemens representative and provide configuration file and FB schedule.
S: 106	Seq. CP	Re-install firmware (firmware upgrade). If fault persists contact your local Siemens representative.
S: 107	Seq. Duration	Increase update rate limit. If fault persists contact your local Siemens representative.
S: 108	BC Corrupt	Contact your local Siemens representative and provide configuration file and FB schedule.
S: 109	BC Start	Re-install firmware (firmware upgrade). If fault persists contact your local Siemens representative.
S: 110	BC Stop	Re-install firmware (firmware upgrade). If fault persists contact your local Siemens representative.
S: 111	BC Duration	Hardware problem. If fault persists contact your local Siemens representative.
S: 112	CPU Fault	Hardware problem. If fault persists contact your local Siemens representative.
S: 113	Data Bus	Hardware problem. If fault persists contact your local Siemens representative.

S: 114	Addr Bus	Hardware problem. If fault persists contact your local Siemens representative.
S: 115	Spur SW	Hardware problem. If fault persists contact your local Siemens representative.
S: 116	Spur HW	Hardware problem. If fault persists contact your local Siemens representative.
S: 117	SV High	Verify TB not in simulation mode. If fault persists contact your local Siemens representative.
S: 118	SV Low	Verify TB not in simulation mode. If fault persists contact your local Siemens representative.

10.3 Operation troubleshooting

Operating symptoms, probable causes, and resolutions.

Symptom	Cause	Action
Display shows S: 0 LOE	level or target is out of range	• check specifications • check **Low Calibration Pt. (2.3.7.1.)** • increase **Confidence (2.5.9.1.)**
Display shows S: 0 LOE	material build-up on antenna	• clean the antenna • re-locate SITRANS LR250
Display shows S: 0 LOE	location or aiming: • poor installation • flange not level • Auto False Echo Suppression may be incorrectly applied	• check to ensure nozzle is vertical • ensure end of antenna protrudes from end of nozzle • review Auto False Echo Suppression (Page 245) • ensure Auto False Echo Suppression Range is set correctly
Display shows S: 0 LOE	antenna malfunction: • temperature too high • physical damage • excessive foam • multiple echoes	• check temperature in **Maximum Value (3.3.2.)** • use foam deflector or stillpipe • relocate • use a defoamer • set **Algorithm (2.5.7.1.)** to t**F** (trueFirst echo)
Reading does not change, but the level does	SITRANS LR250 processing wrong echo, for example, vessel wall, or structural member	• re-locate SITRANS LR250 • check nozzle for internal burrs or welds • rotate device 90° • use **Auto False Echo Suppression (2.5.10.1.)** • if necessary: see Auto False Echo Suppression (Page 245)
Measurement is consistently off by a constant amount	• setting for **Low Calibration Point (2.3.7.1.)** not correct • setting for **Sensor Offset (2.3.7.3.)** not correct	• check distance from sensor reference point to **Low Calibration Point (2.3.7.1.)** • check **Sensor Offset (2.3.7.3.)**
Screen blank	power error	• check nameplate rating against voltage supply • check power wiring or source
	too much load resistance	• change barrier type, or • remove something from the loop, or • increase supply voltage • reduce wire distance or use larger gage wire
Reading erratic	echo confidence weak	• refer to **Confidence (2.5.9.1.)** • use **Auto False Echo Suppression (2.5.10.1.)** and **Auto False Echo Suppression Range (2.5.10.2.)** • use foam deflector or stillpipe

Symptom	Cause	Action
	liquid surface vortexed	• decrease **Fill Rate (2.3.8.2..)** • relocate device to side pipe • increase confidence threshold in **Echo Threshold (2.5.7.3.)**
	material filling	• Re-locate SITRANS LR250
Reading response slow	**Fill Rate (2.3.8.2.)** setting incorrect	• increase measurement response if possible
Reads correctly but occasionally reads high when vessel is not full	• detecting close range echo • build up near top of vessel or nozzle • nozzle problem	• clean the antenna • use **Auto False Echo Suppression (2.5.10.1.)** and **Auto False Echo Suppression Range (2.5.10.2.)**
Level reading lower than actual material level	• material is within Near Range zone • multiple echoes processed	• decrease **Near Range (2.5.1.)** (minimum value depends on antenna type) • raise SITRANS LR250 • ensure **Algorithm (2.5.7.1.)** is set to t**F** (First echo)
	• vessel near empty and low dK material	• ensure **Material (1.2.)** selection is LIQUID LOW DK • set **Position Detect (2.5.7.2.)** to **Hybrid** • check the setting for **CLEF Range (2.5.7.4.):** see the table below **Propogation Factor (2.5.3.)** for recommended settings

Technical data

11

Note

Device specifications

Siemens makes every attempt to ensure the accuracy of these specifications but reserves the right to change them at any time.

11.1 Power

⚠	General Purpose Intrinsically Safe Non-Sparking Non-incendive (FM/CSA US/Canada only)	9-32 V DC

Bus powered	9-32 V DC, per IEC 61158-2 (Foundation Fieldbus)
Current consumed	20 mA

11.2 Performance

Reference operating conditions according to IEC 60770-1

Ambient temperature	15 to 25 °C (59 to 77 °F)
Humidity	45 to 75% relative humidity
Ambient pressure	860 to 1060 mbar a (86000 to 106000 N/m^2 a)
Interference reflections	minimum 20 dB lower than the main target reflection

Measurement Accuracy (measured in accordance with IEC 60770-1)

Maximum measured error	=3 mm (0.12")[1) 2) 3)] including hysteresis and non-repeatability	
Frequency	K-band	
Maximum measurement range[4)]	1.5" antenna	10 m (32.8 ft)[5)]
	2" threaded PVDF antenna	
	2"/DN50/50A Flangedencapsulated antenna (FEA)	
	2" ISO 2852, DN50 DIN11864-1/2/3, DN50 DIN11851,Tuchenhagen Types F and N Hygienic encapsulated antenna (HEA)	
	all other versions	20 m (65.6 ft)
Minimum detectable distance	50 mm (2") from end of antenna[6)]	
Update time[7)]	minimum 1 second, depending on settings for **Response Rate (2.3.8.1.)** and **LCD Fast Mode (4.9.).**	
Influence of ambient temperature	< 0.003% / K (average over full temperature range, referenced to maximum range)	
Long-term stability	<0.1 % over 60 months	
Dielectric constant of material measured	dK > 1.6 [antenna and application dependent[8)]]	
Memory	non-volatile EEPROM	
	no battery required	

[1)] The statistical accuracy is typically 3 mm (0.12") 90% of the time, when tested in accordance with IEC 60770-1.

[2)] Under severe EMI/EMC environments per IEC 61326-1 or NAMUR NE21, the device error may increase to a maximum of 10 mm (0.4").

[3)] For 2" threaded PVDF antenna, Flanged encapsulated antennas and Hygienic encapsulated antennas, the maximum measured error <500 mm from the sensor reference point =25 mm (1").

[4)] From sensor reference point: see Dimension drawings (Page 195) and Flanged Horn with extension (Page 202).

[5)] 20 m (65.6 ft) possible in a stillpipe/bypass

[6)] Minimum range is antenna length +50 mm (2"). See Dimension drawings (Page 195).

[7)] Reference conditions: **Response Rate (2.4.1.)** set to **FAST, LCD Fast Mode (4.9.)** set to **ON**.

[8)] For 1.5" (40 mm) antenna and 2" (50 mm) threaded PVDF antenna, 2"/DN50/50A flanged encapsulated antenna and 2" ISO 2852, DN50 DIN 11864-1/2/3, DN50 DIN11851, Tuchenhagen Types F and N hygienic encapsulated antenna the minimum dK is limited to 3 unless a stillpipe is used.

11.3 Interface

Communication:	Foundation Fieldbus	
	ITK version 5	Blocks supported: RESOURCE, LTB, AIFB1, AIFB2, LCD, DIAG Block execution time: AIFB - 40 ms
Configuration	Remote	FF host system or Emerson AMS (PC)
	Local	Siemens Milltronics infrared handheld programmer [see Programmer (infrared keypad) (Page 194), or Field Communicator 375 (Page 263)]
	Display (local)[1)]	graphic LCD, with bar graph (representing level)

1) Display quality will be degraded in temperatures below –25 °C (–13 °F) and above +65 °C (+149 °F).

11.4 Mechanical

Process connection:	Threaded connection	1.5" NPT (ASME B1.20.1), R (BSPT, EN 10226-1) [a)] or G (BSPP, EN ISO 228-1) or 2" NPT (ASME B1.20.1), R (BSPT, EN 10226-1) or G (BSPP, EN ISO 228-1) or 3" NPT (ASME B1.20.1), R (BSPT, EN 10226-1) or G (BSPP, EN ISO 228-1)	
	Flange connection (flat-face)	2, 3, 4" (ASME 150 lb, 300 lb) DN50, DN80, DN100 (PN10/16, PN25/40) 50A, 80A, 100A (JIS 10K)	
	Materials	316L /1.4404 or 316L /1.4435 stainless steel	
	Flange connection (raised face)	2, 3, 4" (ASME 150 lb, 300 lb) DN50, DN80, DN100, DN150 (PN10/16, PN25/40)	
	Materials	1.4404 or 1.4435 stainless steel, optional Alloy N06022/2.4602 (Hastelloy®C-22 or equivalent)	
	Flanged encapsulated antenna (FEA) connection (raised face)	2, 3, 4, 6" (ASME 150 lb); DN50, DN80, DN100, DN150 (PN10/16); 50A, 80A, 100A, 150A (JIS 10K)	
	Materials	316L /1.4404 or 316L /1.4435 stainless steel	
	Hygienic encapsulated antenna (HEA) connection	ISO 2852 (2, 3, 4") DIN 11851 (DN50, DN80, DN100) DIN 11864-1/2/3 (DN50, DN80, DN100)	
	Materials	Tuchenhagen (Type F [50 mm] and Type N [68 mm]) 316L /1.4404 or 316L /1.4435 stainless steel	
		ISO 2852 (2, 3, 4") DIN 11864-3 (DN50, DN80, DN100)	clamp: 304/1.4301 stainless steel

		Tuchenhagen (Type F [50 mm] and Type N [68 mm]) 316L /1.4404 or 316L /1.4435 stainless steel	clamp: 304/1.4301 stainless steel nut connection: 303/1.4305 stainless steel
		DIN 11851/11864-1 (DN50, DN80, DN100)	captive slotted nut connection: 304L/1.4307
		DIN 11864-2 (DN50, DN80, DN100)	mounting nuts and bolts: 304/1.4301 stainless steel
Antenna:	Horn Materials	standard 1.5" (40 mm), 2" (50 mm), 3" (80 mm), and 4" (100 mm) horn, optional 100 mm (4") horn extension 316L stainless steel with PTFE emitter optional Alloy N06022/2.4602 (Hastelloy®C-22 or equivalent) with PTFE emitter	
	Threaded PVDF antenna Wetted materials	2" (50 mm) PVDF (Polyvinylidene fluoride)	
	Flanged encapsulated antenna Wetted materials	316L /1.4404 or 316L /1.4435 stainless steel TFM™ 1600 PTFE lens	
	Hygienic encapsulated antenna Wetted material	316L/1.4404 or 316L/1.4435 stainless steel TFM™ 1600 PTFE (plus chosen seal)	
Enclosure	Construction	aluminum, polyester powder-coated	
	Conduit entry	2 x M20x1.5, or 2 x ½" NPT	
	Ingress protection	Type 4X/NEMA 4X, Type 6/NEMA 6, IP67, IP68	
Weight (excluding extensions):	1.5" threaded connection with 1.5" horn antenna	approximately 5.1kg (11.2 lb)	
	2" threaded connection with 2" horn antenna	approximately 5.5 kg (12.1 lb)	
	3" threaded connection with 3" horn antenna	approximately 7.0 kg (15.4 lb)	
	2" threaded PVDF antenna	approximately 3.3 kg (7.3 lb)	
	DN50 PN10/16 or 2" 150 lb flat-face flange with 2" horn antenna	approximately 8 kg (17.6 lb)	
	DN100 PN25/40 or 4" ASME 300 lb flat-face flange with 4" horn antenna	approximately 17.4 kg (38.3 lb)	
	DN50 PN10/16 raised-face flange with 2" horn antenna	approximately 6 kg (13.2 lb)	
	DN100 PN25/40 raised-face flange with 4" horn antenna	approximately 11.3 kg (24.9 lb)	
	2" ASME 150 lb FEA	approximately 7.0 kg (15.4 lb)	
	3" ASME 150 lb FEA	approximately 10.7 kg (23.6 lb)	
	4" ASME 150 lb FEA	approximately 13.1 kg (28.9 lb)	
	6" ASME 150 lb FEA	approximately 17.7 kg (39 lb)	
	DN50 PN10/16 FEA	approximately 7.1 kg (15.7 lb)	
	DN80 PN10/16 FEA	approximately 10.1 kg (22.3 lb)	
	DN100 PN10/16 FEA	approximately 11.1 kg (24.5 lb)	

	DN150 PN10/16 FEA	approximately 15.9 kg (35.1 lb)
	50 A JIS 10K FEA	approximately 6.5 kg (14.3 lb)
	80 A JIS 10K FEA	approximately 9 kg (19.8 lb)
	100 A JIS 10K FEA	approximately 10.1 kg (22.3 lb)
	150 A JIS 10K	approximately 16.3 kg (35.9 lb)
	2" ISO2852 HEA	approximately 4.7 kg (10.4 lb)
	3" ISO2852 HEA	approximately 6.3 kg (13.9 lb)
	4" ISO2852 HEA	approximately 6.8 kg (15 lb)
	DN50 DIN 11864-1 HEA	approximately 4.8 kg (10.6 lb)
	DN80 DIN 11864-1 HEA	approximately 6.7 kg (14.8 lb)
	DN100 DIN 11864-1 HEA	approximately 7.1 kg (15.7 lb)
	DN50 DIN 11864-2 HEA	approximately 5.0 kg (11 lb)
	DN80 DIN 11864-2 HEA	approximately 7.2 kg (15.9 lb)
	DN100 DIN 11864-2 HEA	approximately 7.9 kg (17.4 lb)
	DN50 DIN 11864-3 HEA	approximately 4.8 kg (10.6 lb)
	DN80 DIN 11864-3 HEA	approximately 6.6 kg (14.6 lb)
	DN100 DIN 11864-3 HEA	approximately 7.2 kg (15.9 lb)
	DN50 DIN 11851 HEA	approximately 4.8 kg (10.6 lb)
	DN80 DIN 11851 HEA	approximately 6.8 kg (15 lb)
	DN100 DIN 11851 HEA	approximately 7.2 kg (15.9 lb)
	Tuchenhagen Type F HEA	approximately 4.8 kg (10.6 lb)
	Tuchenhagen Type N HEA	approximately 4.9 kg (10.8 lb)

[a] For use with 1.5" (40 mm) horn antennas only.

11.5 Environmental

Note

- For the specific configuration you are about to use or install, check transmitter nameplate and see Approvals (Page 192).
- Use appropriate conduit seals to maintain IP or NEMA rating.

Location	indoor/ outdoor
Altitude	5000 m (16,404 ft) max.
Ambient temperature	−40 to +80 °C (−40 to +176 °F)
Relative humidity	suitable for outdoor Type 4X/NEMA 4X, Type 6/NEMA 6, IP67, IP68 enclosure (see note above)
Installation category	I
Pollution degree	4

11.6 Process

Note

The maximum temperature is dependent on the process connection, antenna materials, and vessel pressure. For more detailed information see Maximum Process Temperature Chart (Page 248) and Process Pressure/Temperature derating curves (Page 249).

Temperature at process connection	Standard Horn antenna (Threaded or Flanged):	with FKM O-ring	−40 to +200 °C (−40 to +392 °F)
		with FFKM O-ring	−20 to +200 °C (−4 to +392 °F)
	2" NPT / BSPT / G Threaded PVDF antenna:		−40 to +80 °C (−40 to +176 °F)
	Flanged encapsulated antenna (FEA)		-40 to +170 °C (−40 to +338 °F)
	Hygienic encapsulated antenna (HEA)		-40 to +170 °C (−40 to +338 °F)
			with FKM seals used on process connection: -20 to +170 °C (-4 to +338 °F)
			with EPDM seals used on process connection: -40 to +120 °C (-40 to +248 °F)
Pressure (vessel)			Refer to process connection tag and Process Pressure/Temperature derating curves (Page 249).

11.7 Approvals

Note

The device nameplate lists the approvals that apply to your device.

Application type	LR250 version	Approval rating	Valid for:
Non-hazardous	General purpose	$CSA_{US/C}$, FM, CE, RCM	N. America, Europe
	Radio	Europe (RED), FCC, Industry Canada	
Hazardous	Intrinsically safe (Page 42)	ATEX II 1G, Ex ia IIC T4 Ga ATEX II 1D, Ex ia ta IIIC T100 °C Da	Europe
		IECEx SIR 09.0148X, Ex ia IIC T4 Ga Ex ia ta IIIC T100 °C Da	International
		FM/CSA Class I, Div. 1, Groups A, B, C, D Class II, Div. 1, Groups E, F, G Class III T4	US/Canada

Application type	LR250 version	Approval rating	Valid for:
		INMETRO DNV 12.0090 X Ex ia IIC T4 Ga Ex ia ta IIIC T100 ºC Da IP65/IP67 -40 °C ≤ Ta ≤ +80 °C DNV #OCP 0017 ABNT NBR IEC 60079-0:2008, ABNT NBR IEC 60079-11:2009, ABNT NBR IEC 60079-26:2008 e ABNT NBR IEC 60079-31:2011	Brazil
		NEPSI Ex ia IIC T4 Ga Ex iaD 20 T90 IP6X DIP A20 T_A 90ºC	China
	Non-Sparking (Page 45)	ATEX II 3 G, Ex nA IIC T4 Gc	Europe
		NEPSI Ex nA IIC T4 Gc	China
	Non-incendive	FM/CSA Class I, Div. 2, Groups A, B, C, D T5	US/Canada
	Marine	Lloyd's Register of Shipping	
		ABS Type Approval	
		BV Type Approval	
Hygienic/Sanitary		EHEDG EL Class I	International
		EHEDG EL Class I Aseptic	
		3-A Sanitary Standards	

11.8 Programmer (infrared keypad)

The battery is non-replaceable with a lifetime expectancy of 10 years in normal use. To estimate the lifetime expectancy, check the nameplate on the back for the serial number. The date of manufacture is encoded in the serial number. For example, the following was manufactured on March 5, 2016:

PBD/**H3050001**

H: year of manufacture (H is the alpha code referring to 2016; J refers to 2017 and so on).

3: month of manufacture

05: day of manufacture

0001: 4-digit sequential

Year 2010: Apha code = A	Year 2016: Apha code = H
Year 2011: Apha code = B	Year 2017: Apha code = J
Year 2012: Apha code = C	Year 2018: Apha code = K
Year 2013: Apha code = D	Year 2019: Apha code = L
Year 2014: Apha code = E	Year 2020: Apha code = M
Year 2015: Apha code = F	

Siemens Milltronics Infrared IS (Intrinsically Safe) Handheld Programmer for hazardous and all other locations (battery is non-replaceable).

Approvals	CE FM/CSA Class I, II, III, Div. 1, Gr. A to G T6 ATEX II 1GD Ex ia IIC T4 Ga Ex iaD 20 T135 °C IECEx Ex ia IIC T4 Ga Ex iaD 20 T135 °C INMETRO Ex ia IIC T4 Ga Ex ia IIIC T135 °C Da
Ambient temperature	−20 to +50 °C (−5 to +122 °F)
Interface	proprietary infrared pulse signal
Power	3 V non-replaceable lithium battery
Weight	150 g (0.3 lb)
Color	black
Part number	7ML1930-1BK

Dimension drawings

12

12.1 Threaded horn antenna

Note

- Process temperature and pressure capabilities are dependent upon information on the process connection tag. Reference drawing listed on the tag is available for download from our website under **Support/Installation drawings/Level Measurement/Continuous - Radar/LR250**:
  Product page (http://www.siemens.com/LR250)
- Process connection drawings are also available for download from the **Installation Drawings page**.
- Signal amplitude increases with horn diameter, so use the largest practical size.
- Optional extensions can be installed below the threads.

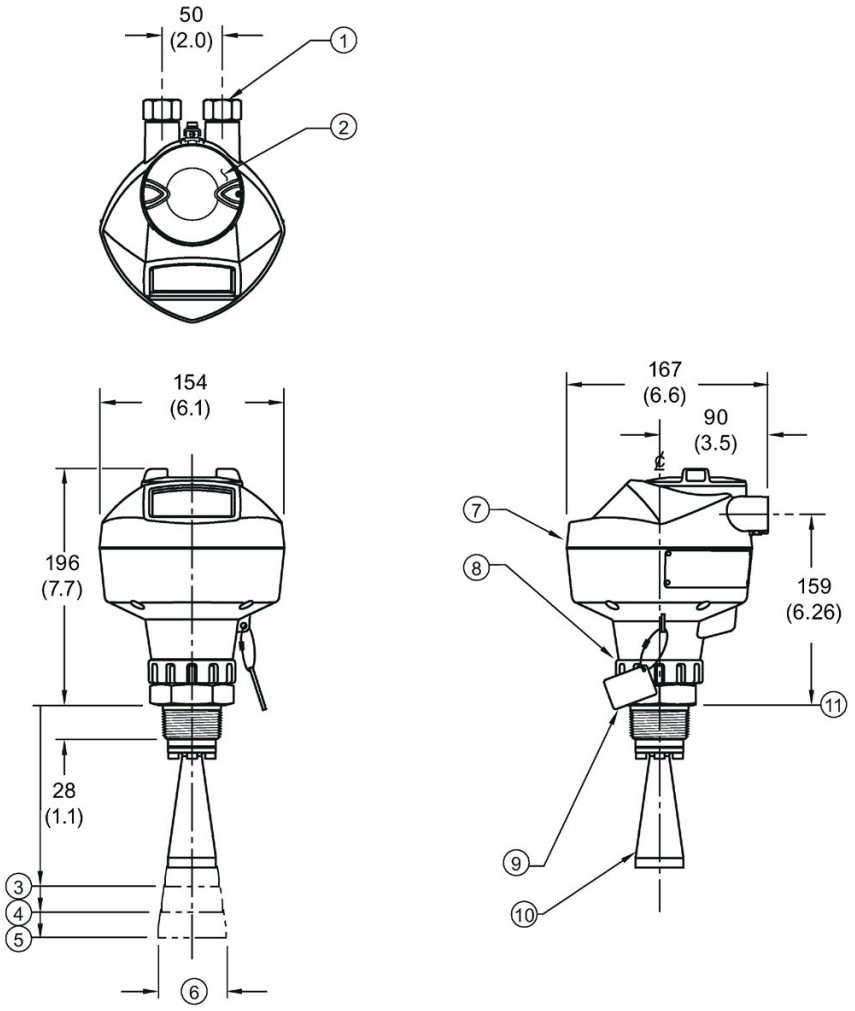

①	½" NPT cable entry, or M20 cable gland	⑦	enclosure/electronics
②	threaded cover	⑧	retaining collar
③	2" horn	⑨	process connection tag
④	3" horn	⑩	horn
⑤	4" horn	⑪	sensor reference point
⑥	horn O.D.		

Dimensions in mm (inch)

Threaded horn dimensions

Antenna Type	Antenna O.D., mm (inch)	Height to sensor reference point, mm (inch) [a]			Beam Angle (°)[b]	Measurement range, m (ft)
		1-1/2" threaded connection	2" threaded connection	3" threaded connection		
1.5"	39.8 (1.57)	135 (5.3)	N/A	N/A	19	10 (32.8)
2"	47.8 (1.88)	N/A	166 (6.55)	180 (7.09)	15	20 (65.6)
3"	74.8 (2.94)	N/A	199 (7.85)	213 (8.39)	10	20 (65.6)
4"	94.8 (3.73)	N/A	254 (10)	268 (10.55)	8	20 (65.6)

[a] Height from bottom of horn to sensor reference point as shown: see dimension drawing.

[b] -3dB in the direction of the polarization axis. For an illustration, see Polarization reference point (Page 29).

12.2 Threaded horn antenna with extension

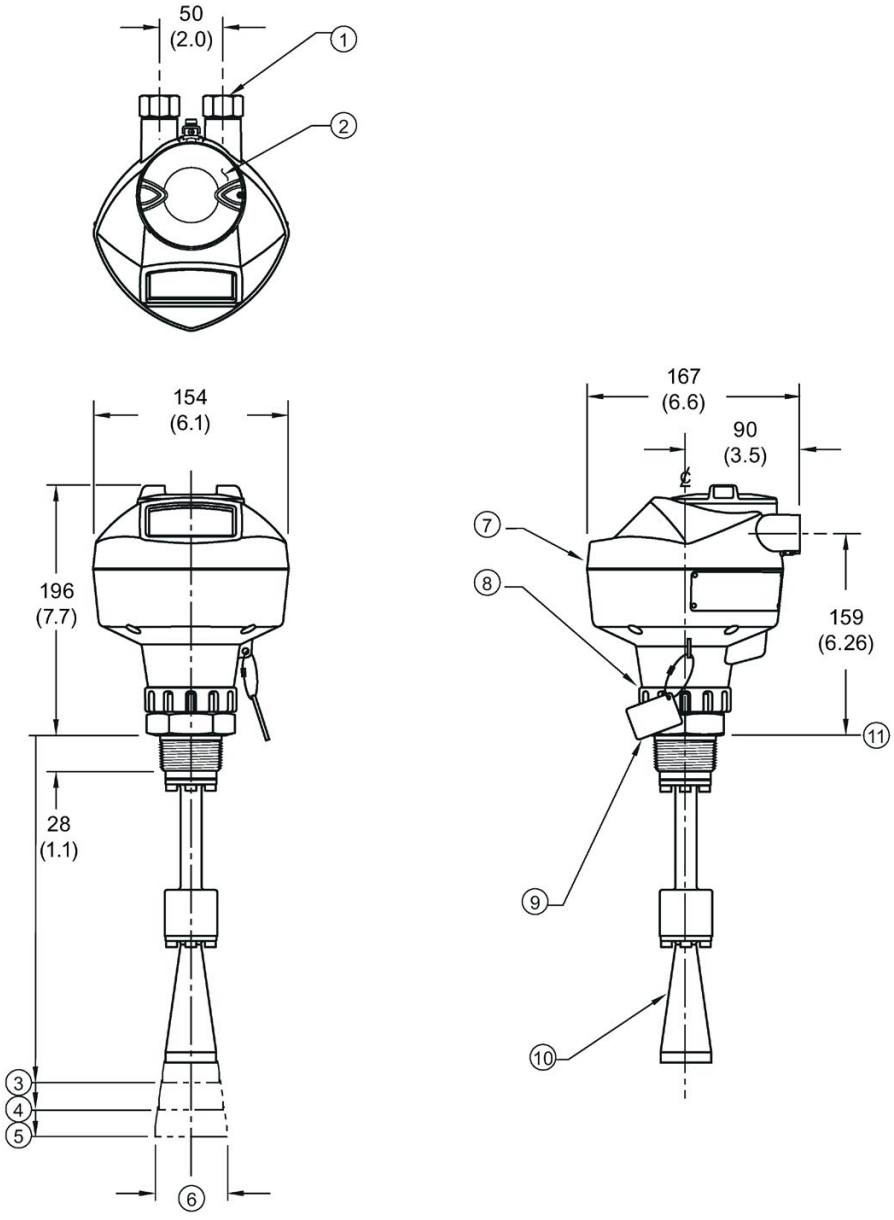

①	½" NPT cable entry, or M20 cable gland	⑦	enclosure/electronics
②	threaded cover	⑧	retaining collar
③	2" horn	⑨	process connection tag
④	3" horn	⑩	horn
⑤	4" horn	⑪	sensor reference point
⑥	horn O.D.		

Dimensions in mm (inch)

Threaded horn with extension dimensions

Antenna Type	Antenna O.D., mm (inch)	Height to sensor reference point, mm (inch) [a]			Beam Angle (°) [b]	Measurement range, m (ft)
		1-1/2" threaded connection	2" threaded connection	3" threaded connection		
1.5"	39.8 (1.57)	235 (9.25)	N/A	N/A	19	10 (32.8)
2"	47.8 (1.88)	N/A	266 (10.47)	280 (11.02)	15	20 (65.6)
3"	74.8 (2.94)	N/A	299 (11.77)	313 (12.32)	10	20 (65.6)
4"	94.8 (3.73)	N/A	354 (13.94)	368 (14.49)	8	20 (65.6)

[a] Height from bottom of horn to sensor reference point as shown: see dimension drawing.

[b] -3dB in the direction of the polarization axis. For an illustration, see Polarization reference point (Page 29).

12.3 Flanged horn antenna

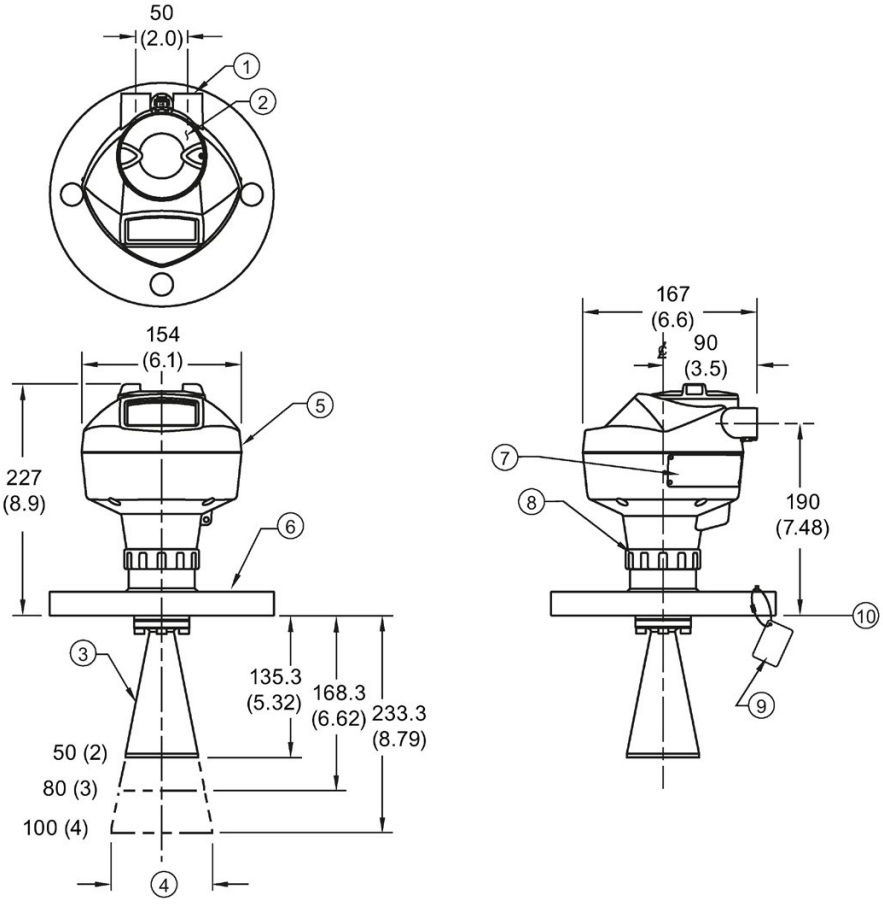

①	½" NPT cable entry, or M20 cable gland	⑥	flange
②	threaded cover	⑦	name-plate
③	horn	⑧	retaining collar
④	horn O.D.	⑨	process connection tag
⑤	enclosure/electronics	⑩	sensor reference point

Dimensions in mm (inch)

Flanged Horn dimensions

Nominal horn size, mm (inch)	Horn O.D., mm (inch)	Height to sensor reference point, mm (inch)[a]		Beam angle (°)[b]	Measurement range, m (ft)
		Stainless steel flange: raised or flat-face	Optional alloy flange [c]		
50 (2)	47.8 (1.88)	135.3 (5.32)	138.3 (5.44)	15	20 (65.6)
80 (3)	74.8 (2.94)	168.3 (6.62)	171.3 (6. 74)	10	
100 (4)	94.8 (3.73)	223.3 (8.79)	226.3 (8.90)	8	

[a] Height from bottom of horn to sensor reference point as shown: see Flanged horn antenna with extension (Page 202). See also Raised-Face flange (Page 227), or Flat-Face flange (Page 232).

[b] -3dB in the direction of the polarization axis (see Polarization reference point (Page 29) for an illustration).

[c] Optional alloy N06022/2.4602 (Hastelloy® C-22 or equivalent). See Raised-Face Flange Dimensions (Page 227).

Note

Heights to sensor reference point are for stainless steel flanges. For optional alloy N06022/2.4602 (Hastelloy© C-22 or equivalent) see Flanged Horn dimensions above.

12.4 Flanged horn antenna with extension

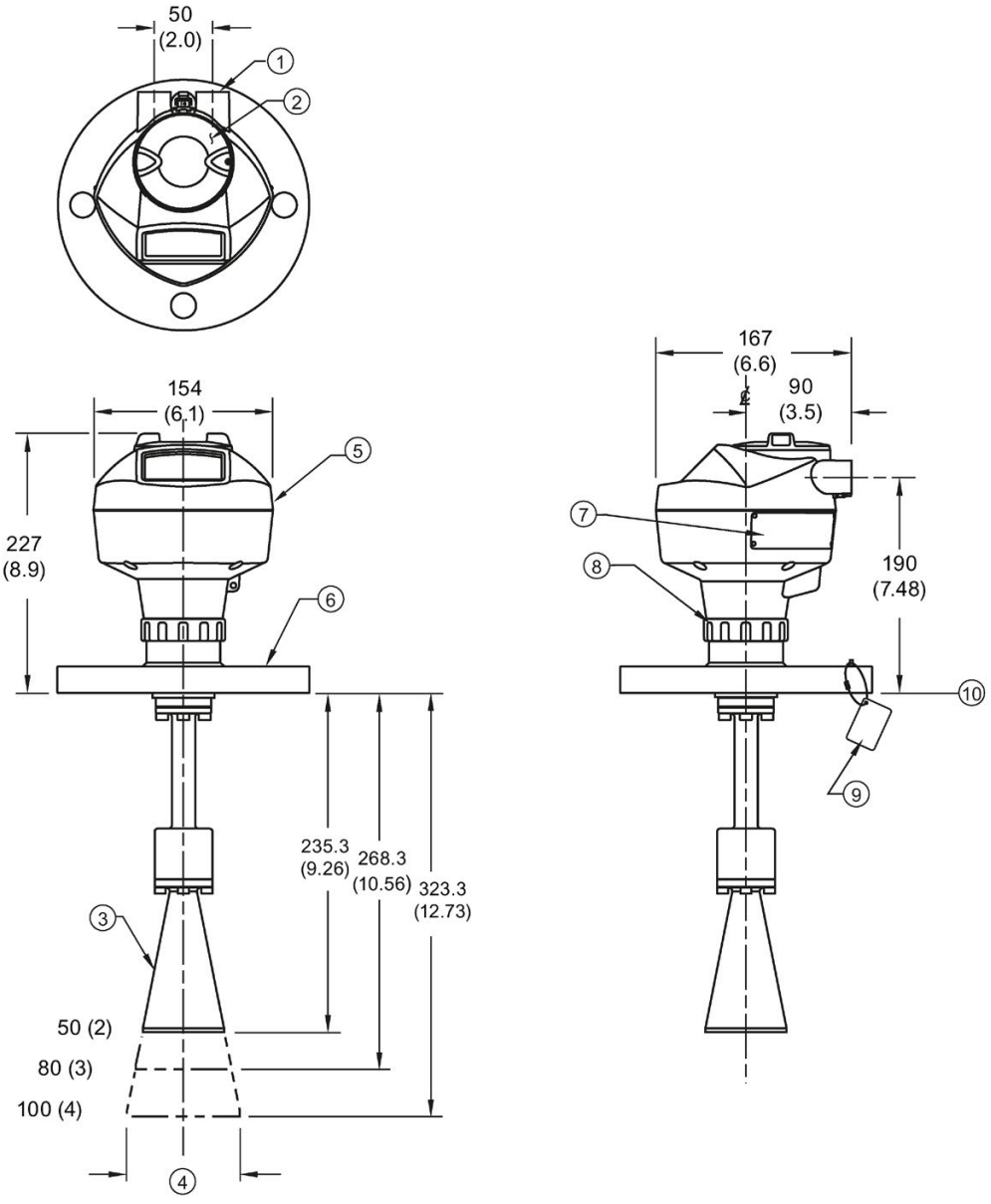

①	½" NPT cable entry, or M20 cable gland	⑥	flange
②	threaded cover	⑦	name-plate
③	horn	⑧	retaining collar
④	horn O.D.	⑨	process connection tag
⑤	enclosure/electronics	⑩	sensor reference point

Dimensions in mm (inch)

Flanged horn with extension dimensions

Nominal horn size, mm (inch)	Horn O.D., mm (inch)	Height to sensor reference point, mm (inch) [a]		Beam angle (°)[b]	Measurement range, m (ft)
		Stainless steel flange: raised or flat-face	Optional alloy flange [c]		
50 (2)	47.8 (1.88)	235.3 (9.26)	238.3 (9.38)	15	20 (65.6)
80 (3)	74.8 (2.94)	268.3 (10.56)	271.3 (10.68)	10	
100 (4)	94.8 (3.73)	323.3 (12.73)	326.3 (12.85)	8	

[a] Height from bottom of horn to sensor reference point as shown: See also Flanged horn antenna (Page 200) or Flat-Face Flange. (Page 232)

[b] -3dB in the direction of the polarization axis (see Polarization reference point (Page 29) for an illustration).

[c] Optional alloy N06022/2.4602 (Hastelloy® C-22 or equivalent). See Raised-Face flange (Page 227).

Note

Heights to sensor reference point are for stainless steel flanges. For optional alloy N06022/2.4602 (Hastelloy© C-22 or equivalent) see Flanged Horn dimensions above.

12.5 Flanged encapsulated antenna (2"/DN50/50A sizes only)

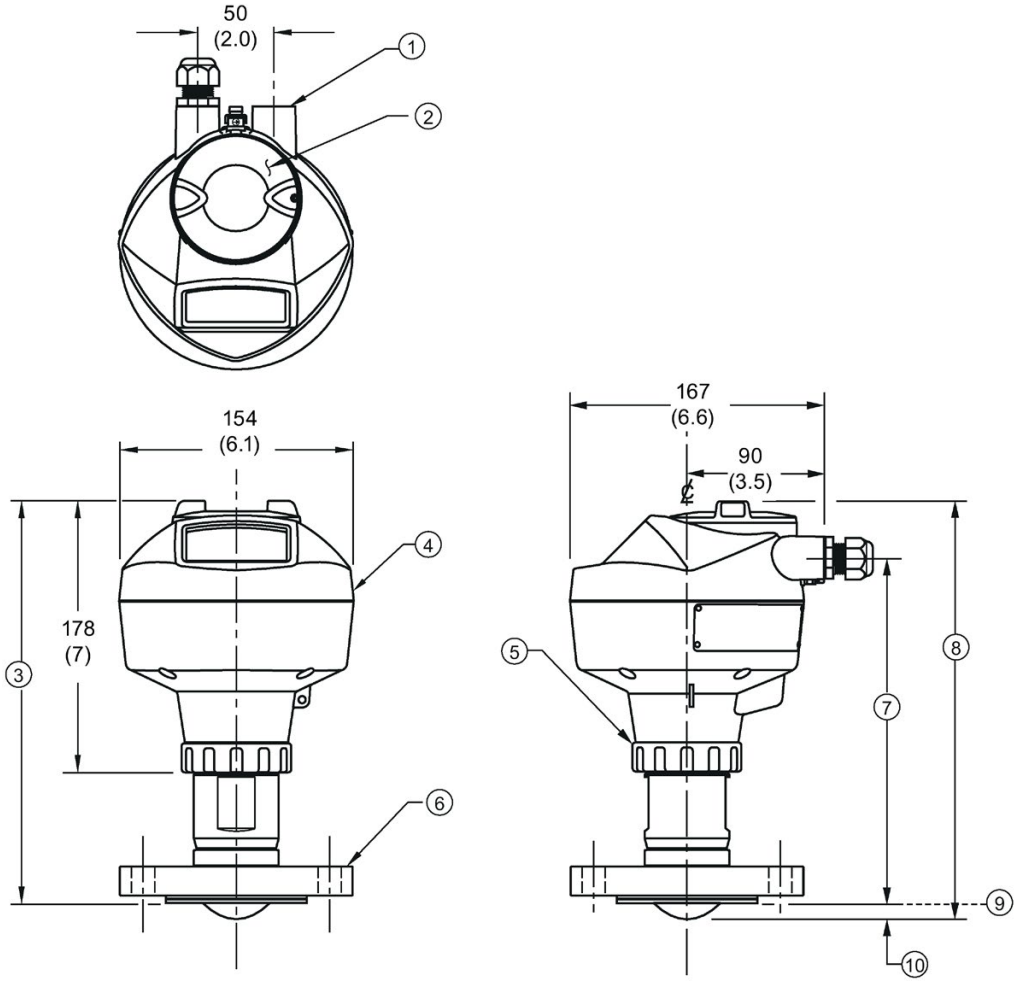

①	½" NPT cable entry, or M20 cable gland	⑥	flange
②	threaded cover	⑦	see table below
③	see table below	⑧	see table below
④	enclosure	⑨	sensor reference point
⑤	retaining collar	⑩	see table below

Dimensions in mm (inch)

Flanged encapsulated antenna (2"/DN50/50A) dimensions

Flange size	③ mm (inch)	⑦ mm (inch)	⑧ mm (inch)	⑩ mm (inch)[1)]
2"/DN50/50A	263 (10.35)	223 (8.78)	274 (10.79)	11 (0.43)

1) Height from tip of lens to sensor reference point as shown.

Flange size	Flange class	Flange O.D. [mm (inch)]	Antenna aperture size [mm (inch)]	Beam angle (°)[1]	Measurement range [m (ft)]
2"	150 LB	152 (5.98)	50 (1.97)	12.8	10 (32.8)[2]
DN50	PN10/16	165 (6.50)			
50A	10K	155 (6.10)			

1) -3 dB in the direction of the polarization axis.

2) 20m if installed in stillpipe

See Raised-Face Flange per EN 1092-1, (Page 230)and Polarization reference point (Page 29).

12.6 Flanged encapsulated antenna (3"/DN80/80A sizes and larger)

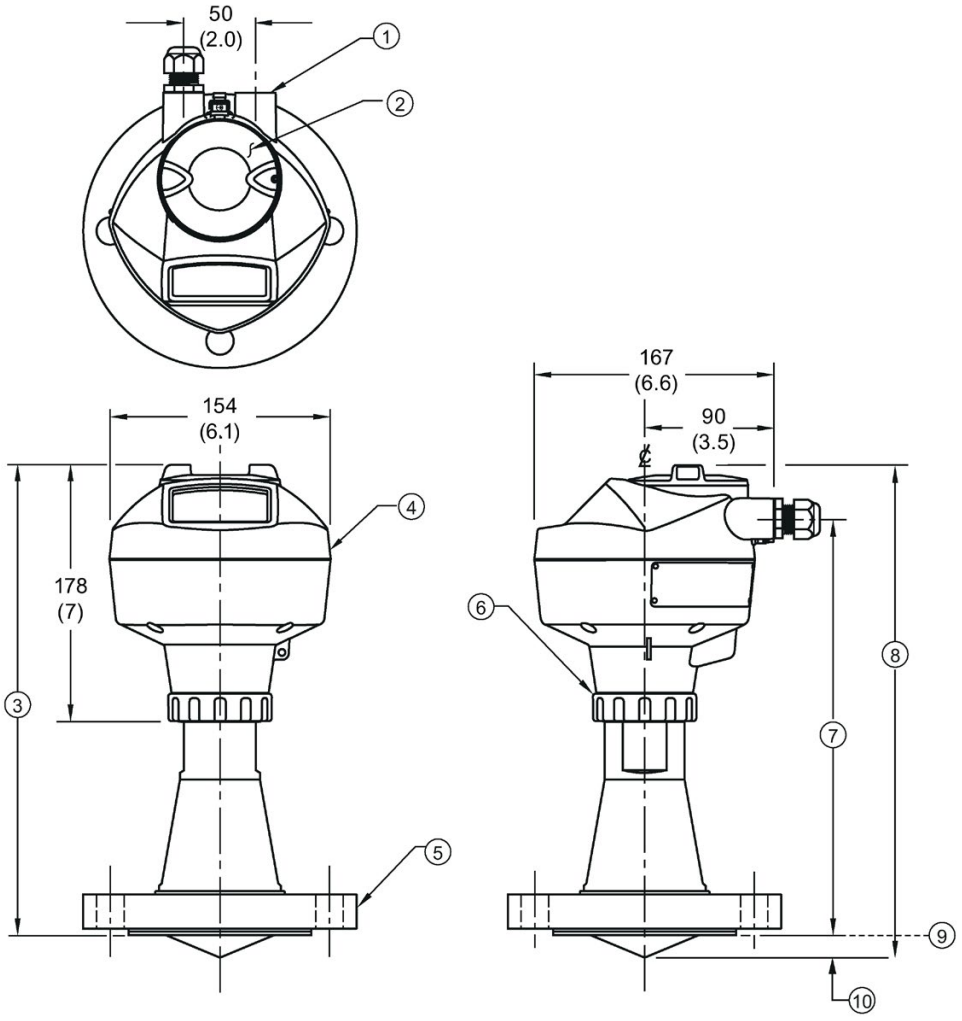

①	½" NPT cable entry, or M20 cable gland	⑥	retaining collar
②	threaded cover	⑦	see table below
③	see table below	⑧	see table below
④	enclosure	⑨	sensor reference point
⑤	flange	⑩	see table below

Dimensions in mm (inch)

Flanged encapsulated antenna (3"/DN80/80A and larger) dimensions

Flange size	③ mm (inch)	⑦ mm (inch)	⑧ mm (inch)	⑩ mm (inch)[1)]
3"/DN80/80A	328 (12.91)	288 (11.34)	343 (13.50)	15 (0.59)
4"/DN100/100A	328 (12.91)	288 (11.34)	343 (13.50)	13 (0.51)
6"/DN150/150A	333 (13.11)	293 (11.54)	348 (13.70)	15 (0.59)

1) Height from tip of lens to sensor reference point as shown. See also Raised-Face Flange per EN 1092-1.

Flange size	Flange class	Flange O.D. [mm (inch)]	Antenna aperture size [mm (inch)]	Beam angle (°)[1)]	Measurement range [m (ft)]
3"	150 LB	190 (7.48)	75 (2.95)	9.6	20 (65.6)
DN80	PN10/16	200 (7.87)			
80A	10K	185 (7.28)			
4"	150 LB	230 (9.06)	75 (2.95)	9.6	20 (65.6)
DN100	PN10/16	220 (8.66)			
100A	10K	210 (8.27)			
6"	150 LB	280 (11.02)	75 (2.95)	9.6	20 (65.6)
DN150	PN10/16	285 (11.22)			
150A	10K	280 (11.02)			

1) -3 dB in the direction of the polarization axis.

See Raised-Face Flange per EN 1092-1 (Page 230), and Polarization reference point (Page 29).

12.7 Hygienic encapsulated antenna (2" ISO 2852 sanitary clamp)

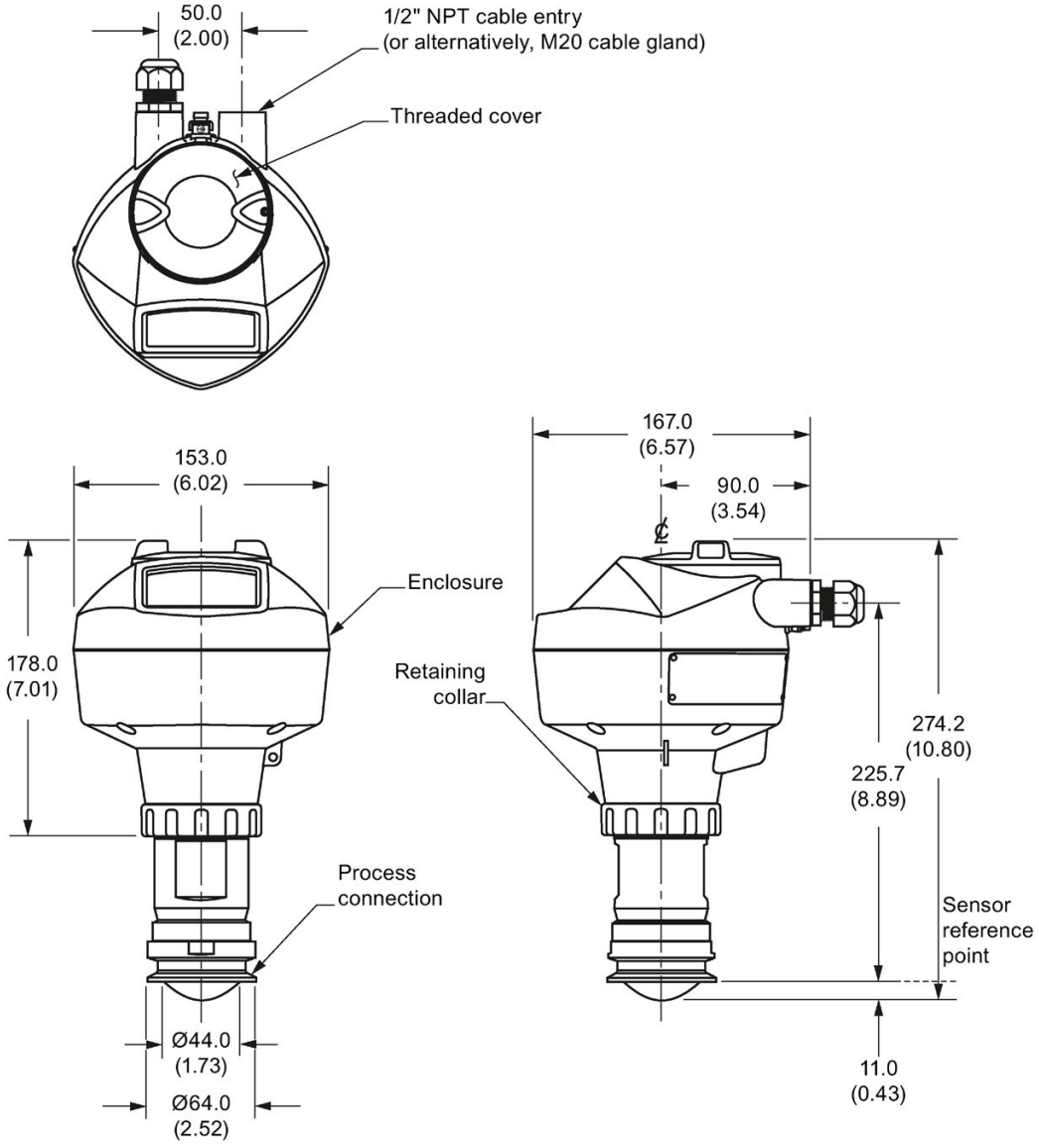

Dimensions in mm (inch)

12.8 Hygienic encapsulated antenna (3" ISO 2852 sanitary clamp)

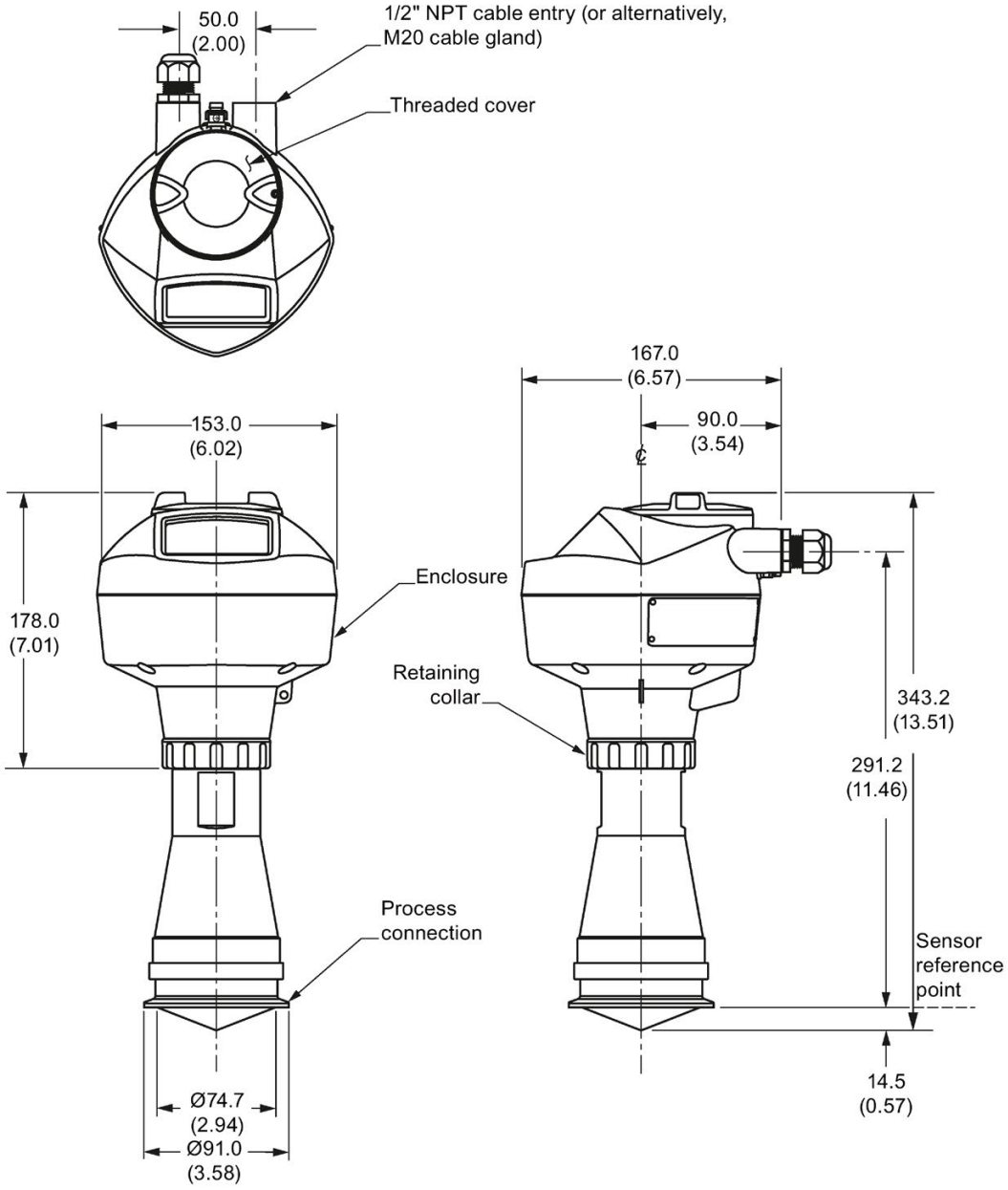

Dimensions in mm (inch)

12.9 Hygienic encapsulated antenna (4" ISO 2852 sanitary clamp)

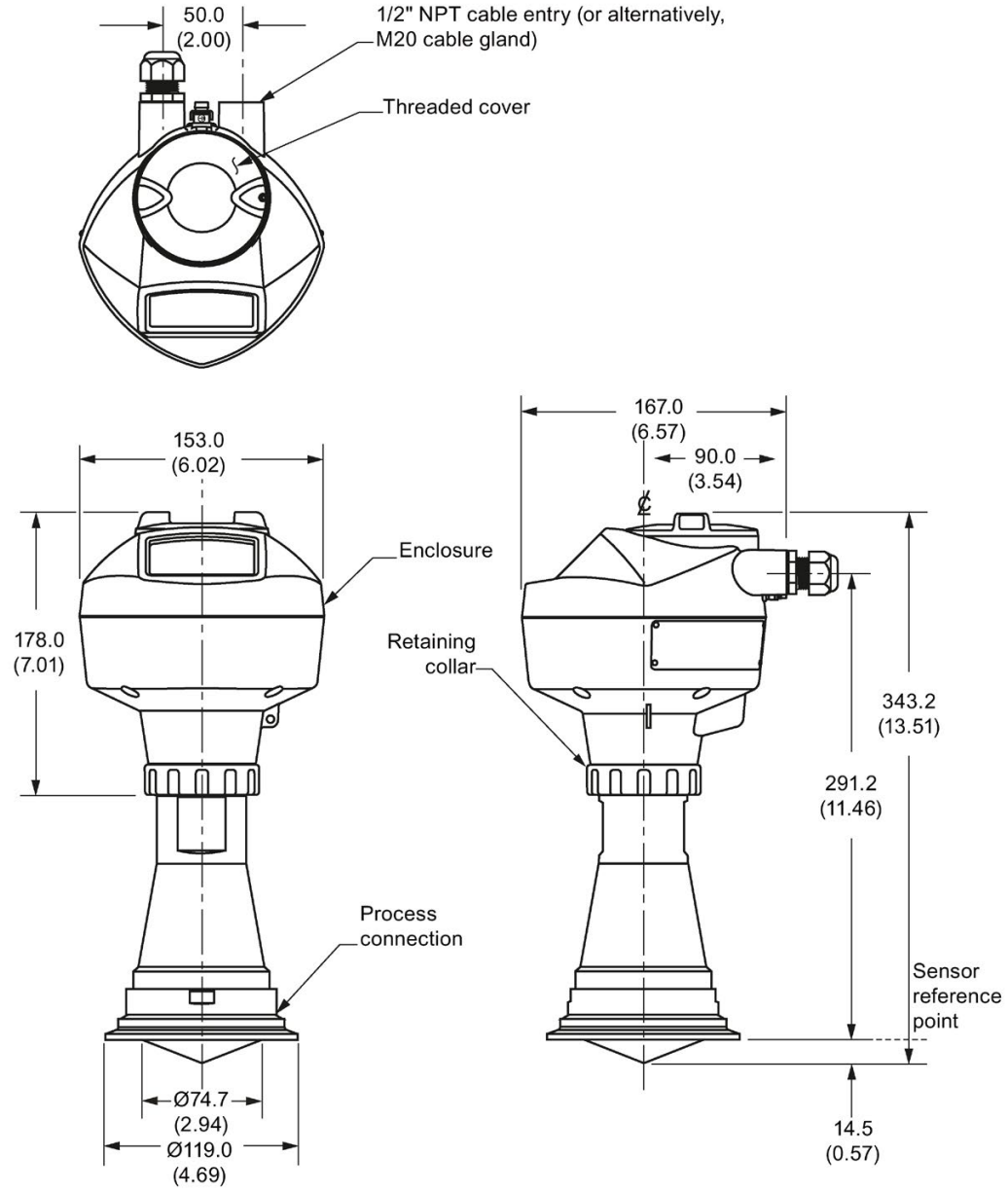

Dimensions in mm (inch)

12.10 Hygienic encapsulated antenna (DN50 nozzle/ slotted nut to DIN 11851)

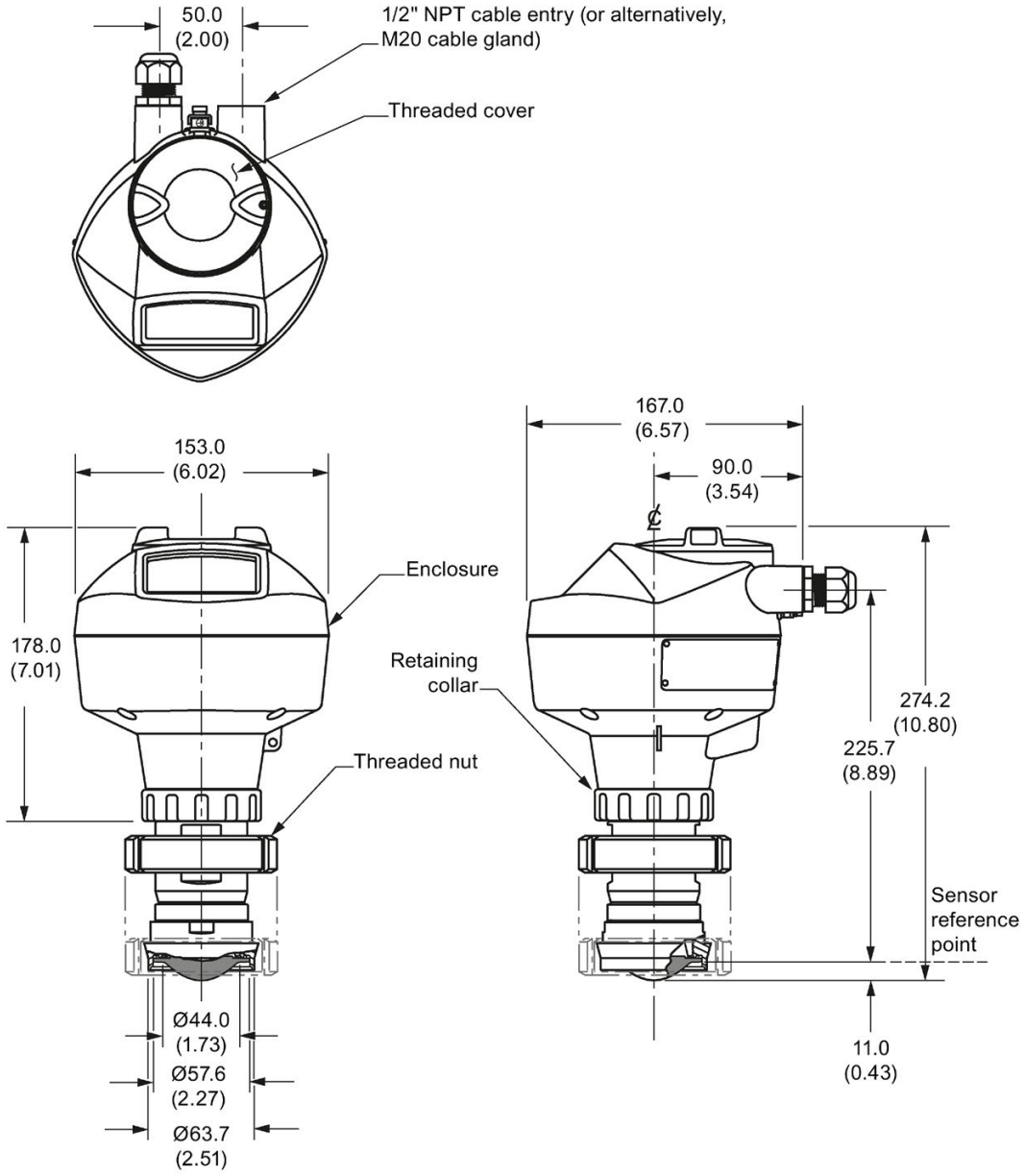

Dimensions in mm (inch)

Note

Cut out of process connection and placement of threaded nut are shown for illustration purposes only.

12.11 Hygienic encapsulated antenna (DN80 nozzle/ slotted nut to DIN 11851)

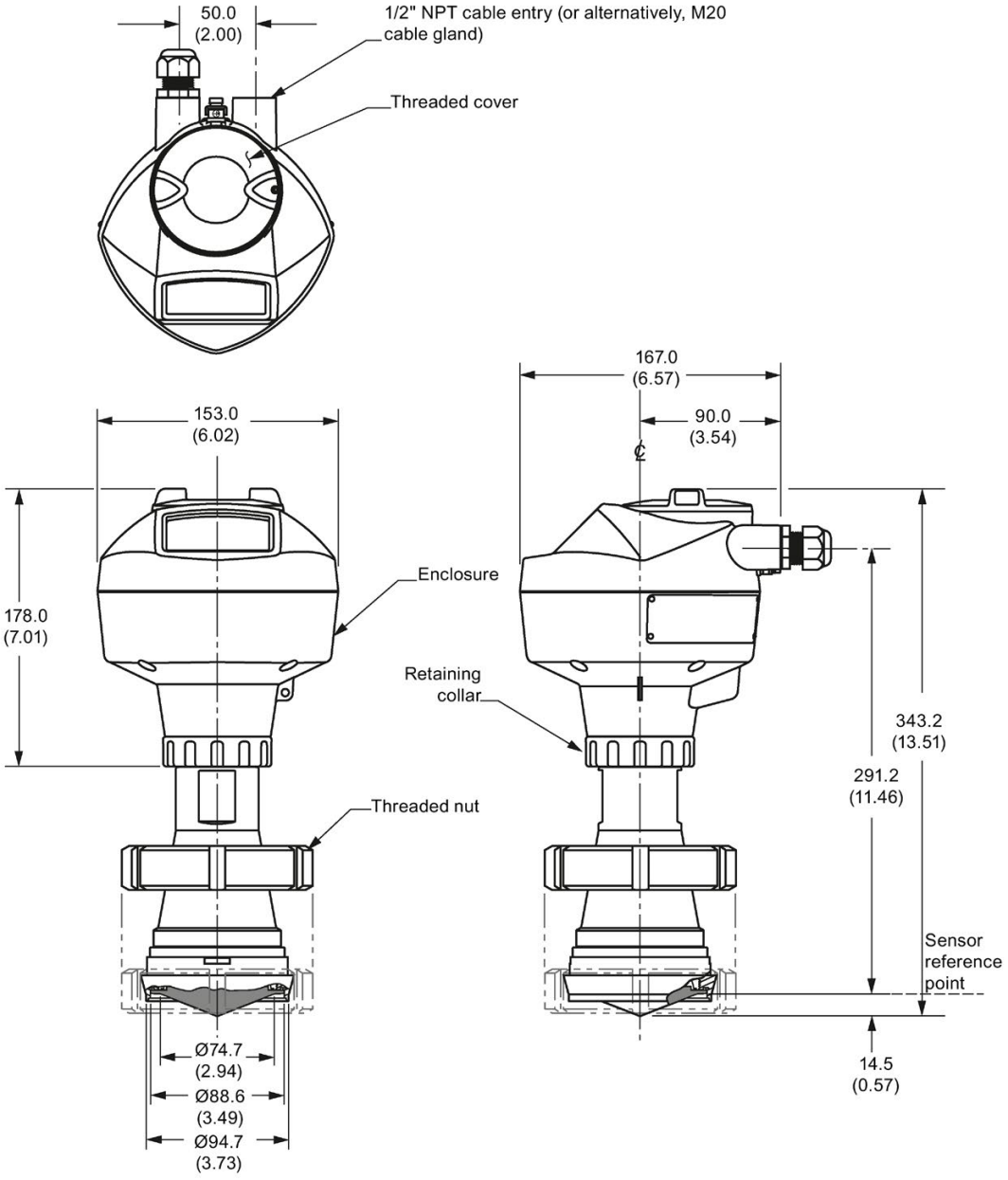

Dimensions in mm (inch)

Note

Cut out of process connection and placement of threaded nut are shown for illustration purposes only.

12.12 Hygienic encapsulated antenna (DN100 nozzle/ slotted nut to DIN 11851)

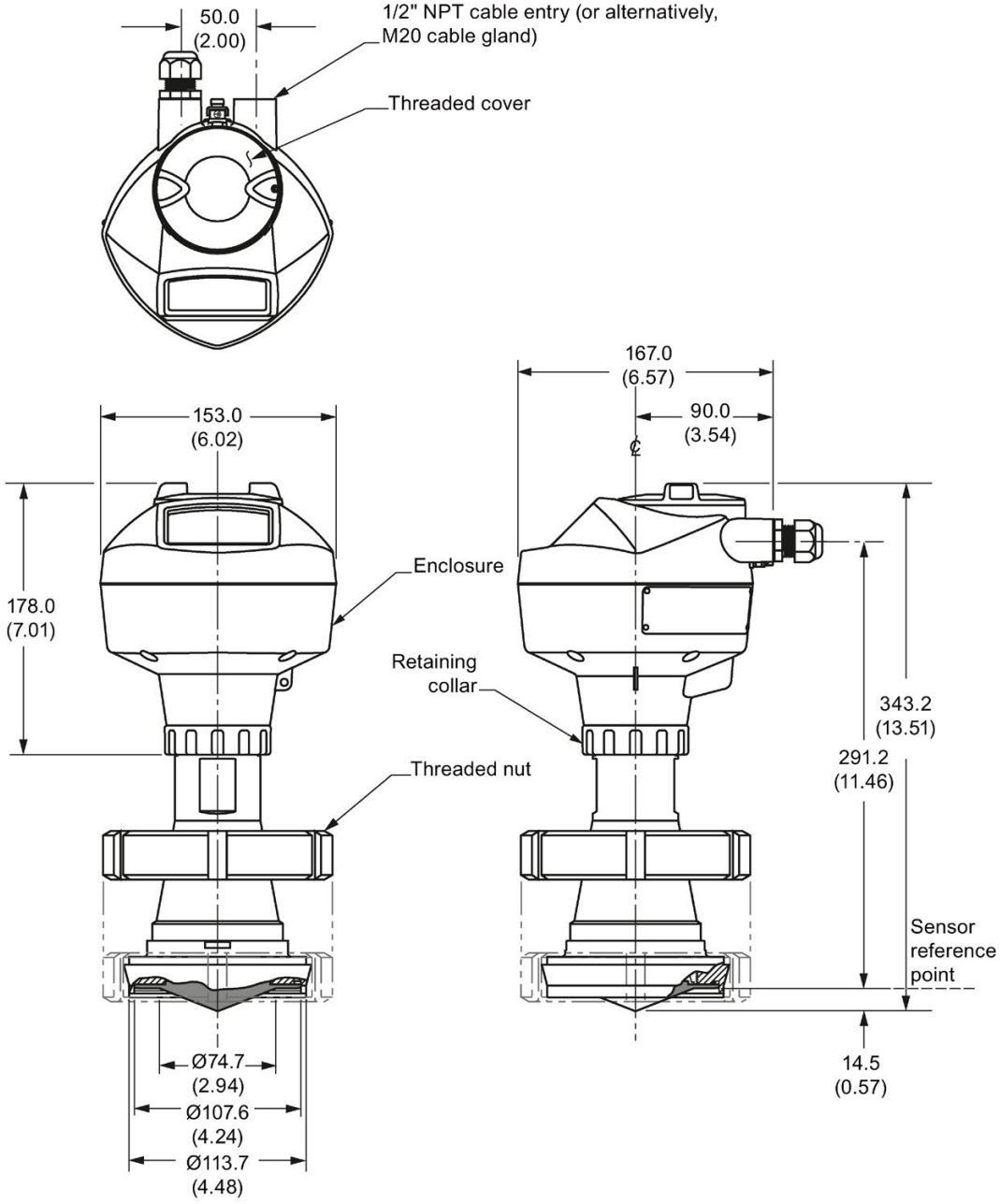

Dimensions in mm (inch)

Note

Cut out of process connection and placement of threaded nut are shown for illustration purposes only.

12.13 Hygienic encapsulated antenna (DN50 aseptic slotted nut to DIN 11864-1)

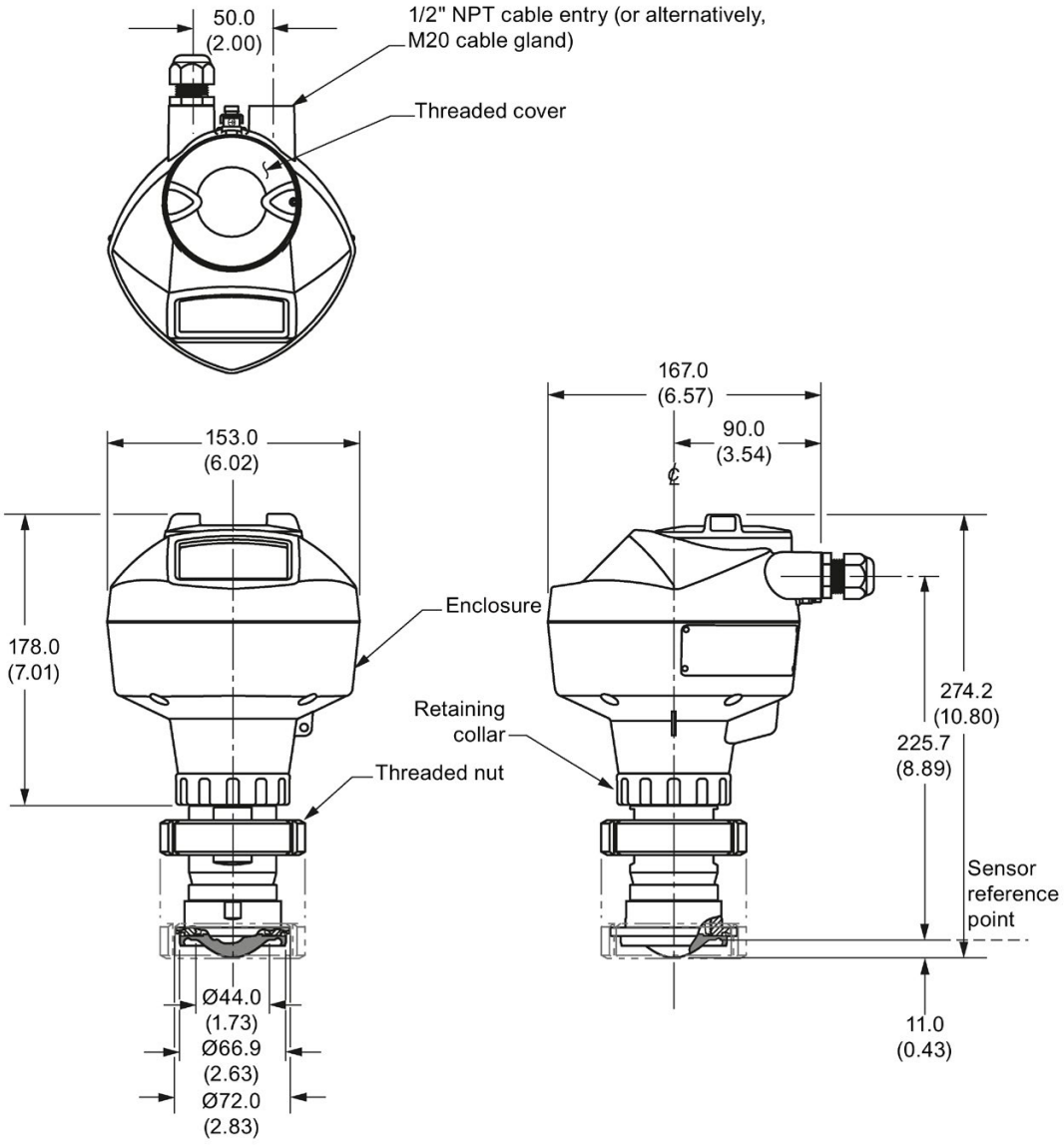

Dimensions in mm (inch)

Note

Cut out of process connection and placement of threaded nut are shown for illustration purposes only.

12.14 Hygienic encapsulated antenna (DN80 aseptic slotted nut to DIN 11864-1)

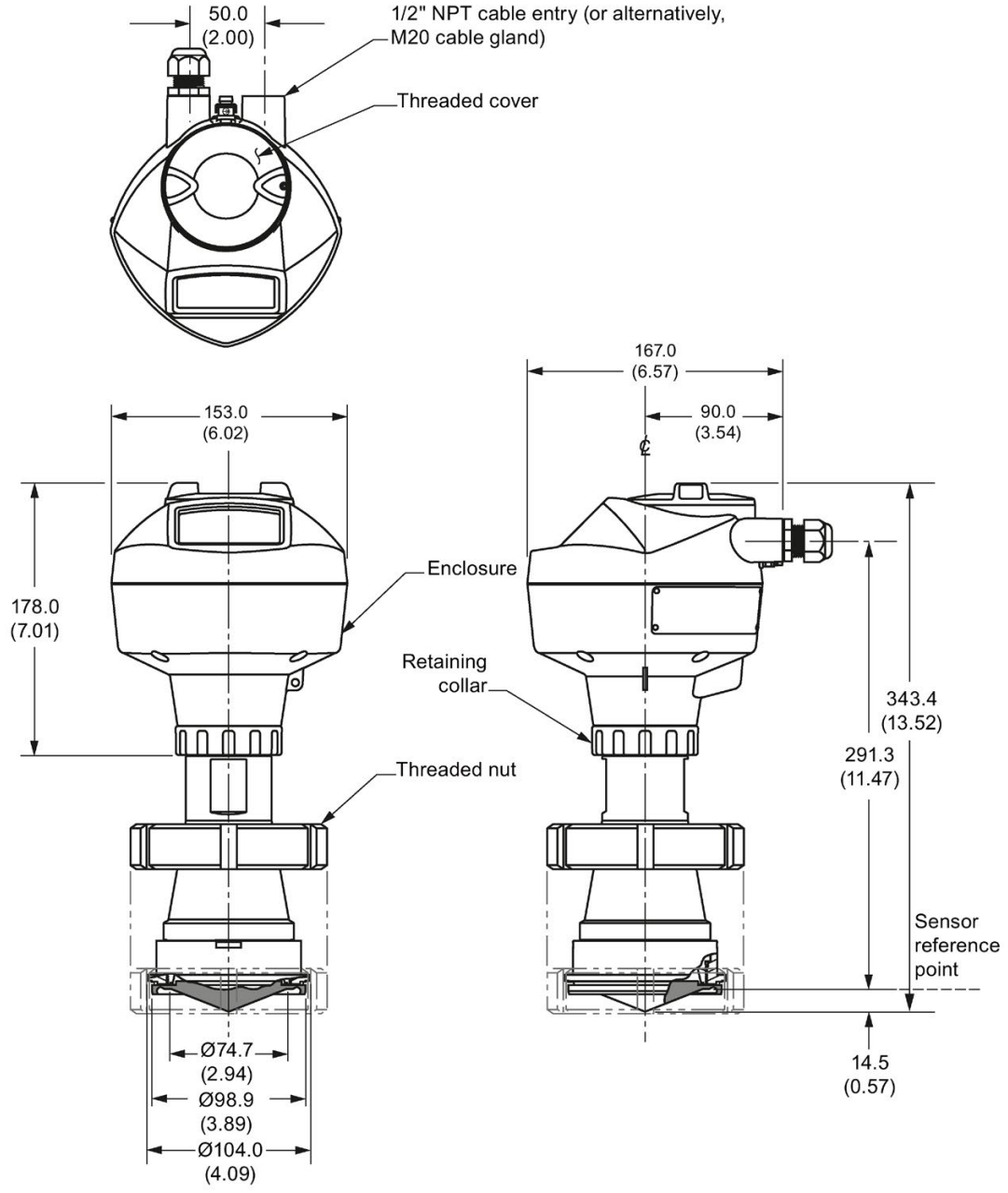

Dimensions in mm (inch)

Note

Cut out of process connection and placement of threaded nut are shown for illustration purposes only.

12.15 Hygienic encapsulated antenna (DN100 aseptic slotted nut to DIN 11864-1)

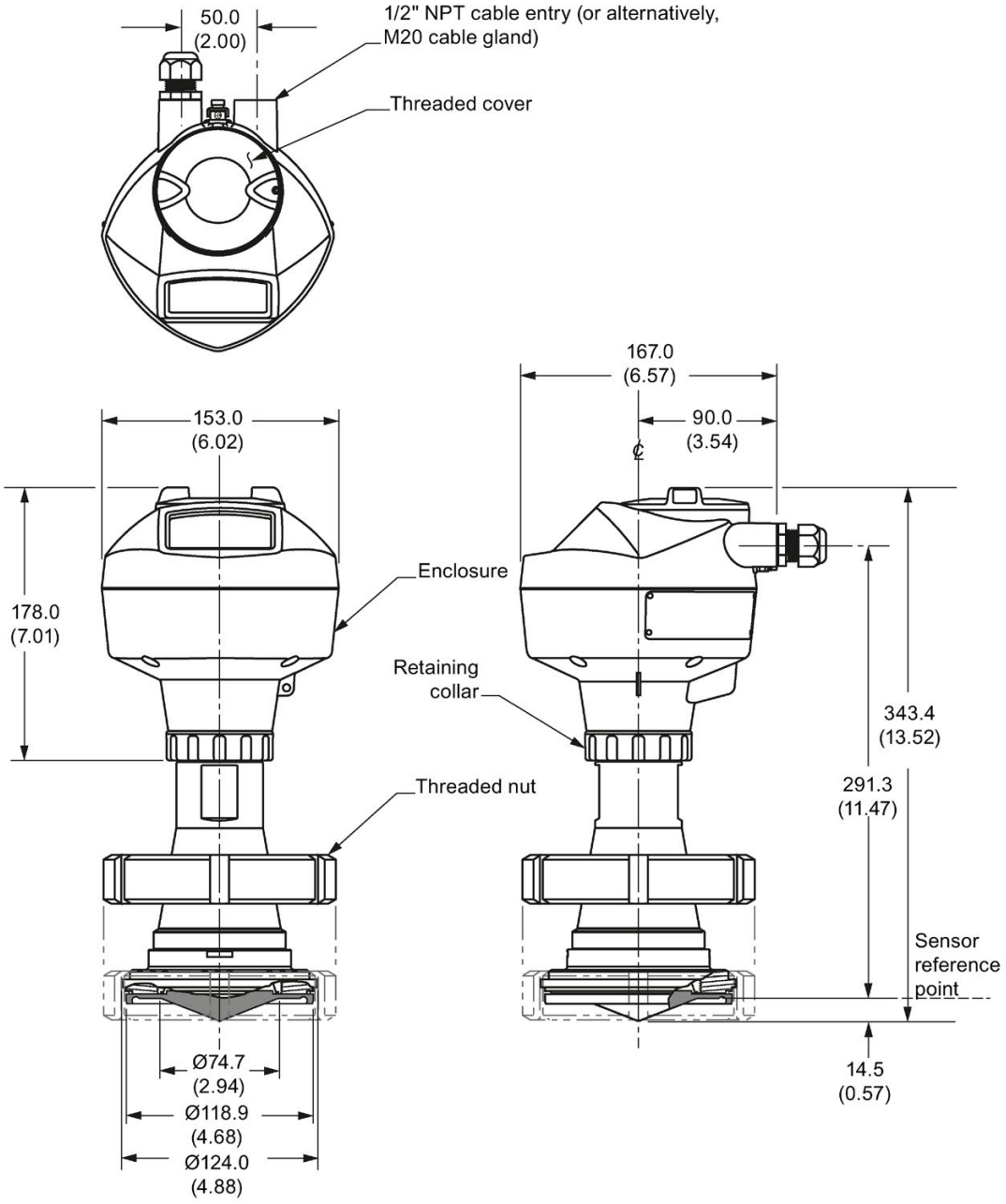

Dimensions in mm (inch)

Note

Cut out of process connection and placement of threaded nut are shown for illustration purposes only.

12.16 Hygienic encapsulated antenna (DN50 aseptic flange to DIN 11864-2)

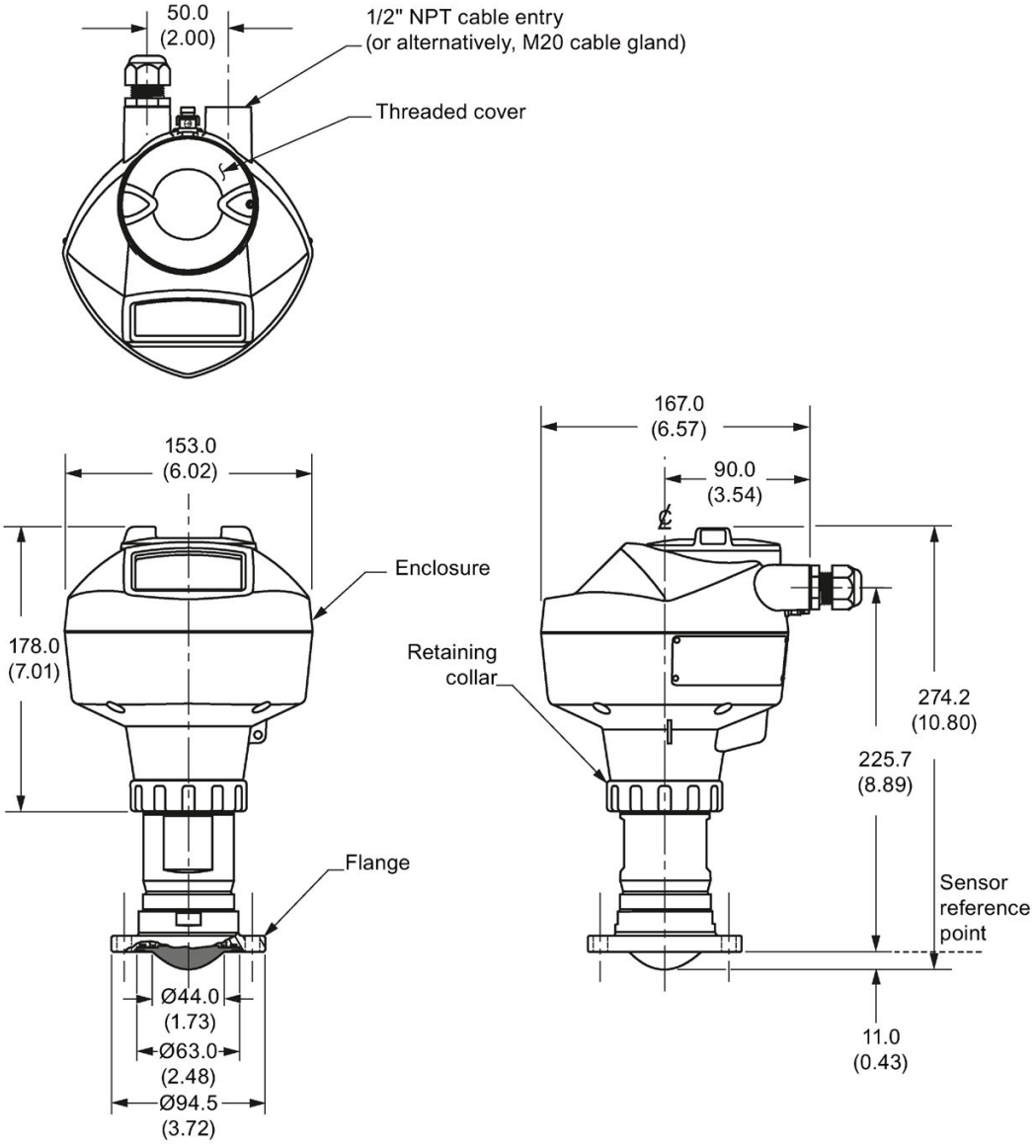

Dimensions in mm (inch)

Note

Cut out of process connection and flange are shown for illustration purposes only.

12.17 Hygienic encapsulated antenna (DN80 aseptic flange to DIN 11864-2)

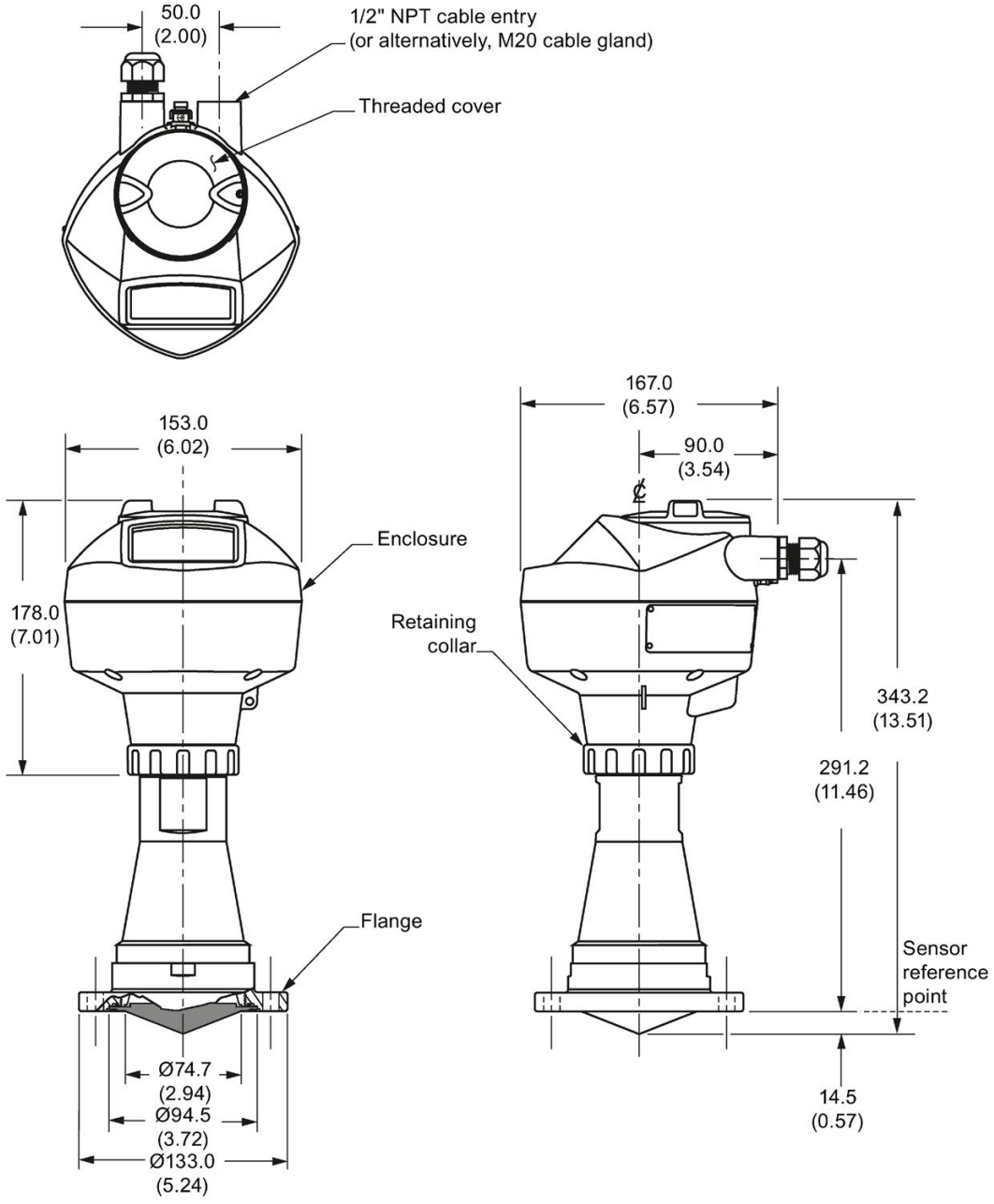

Dimensions in mm (inch)

Note

Cut out of process connection and flange are shown for illustration purposes only.

12.18 Hygienic encapsulated antenna (DN100 aseptic flange to DIN 11864-2)

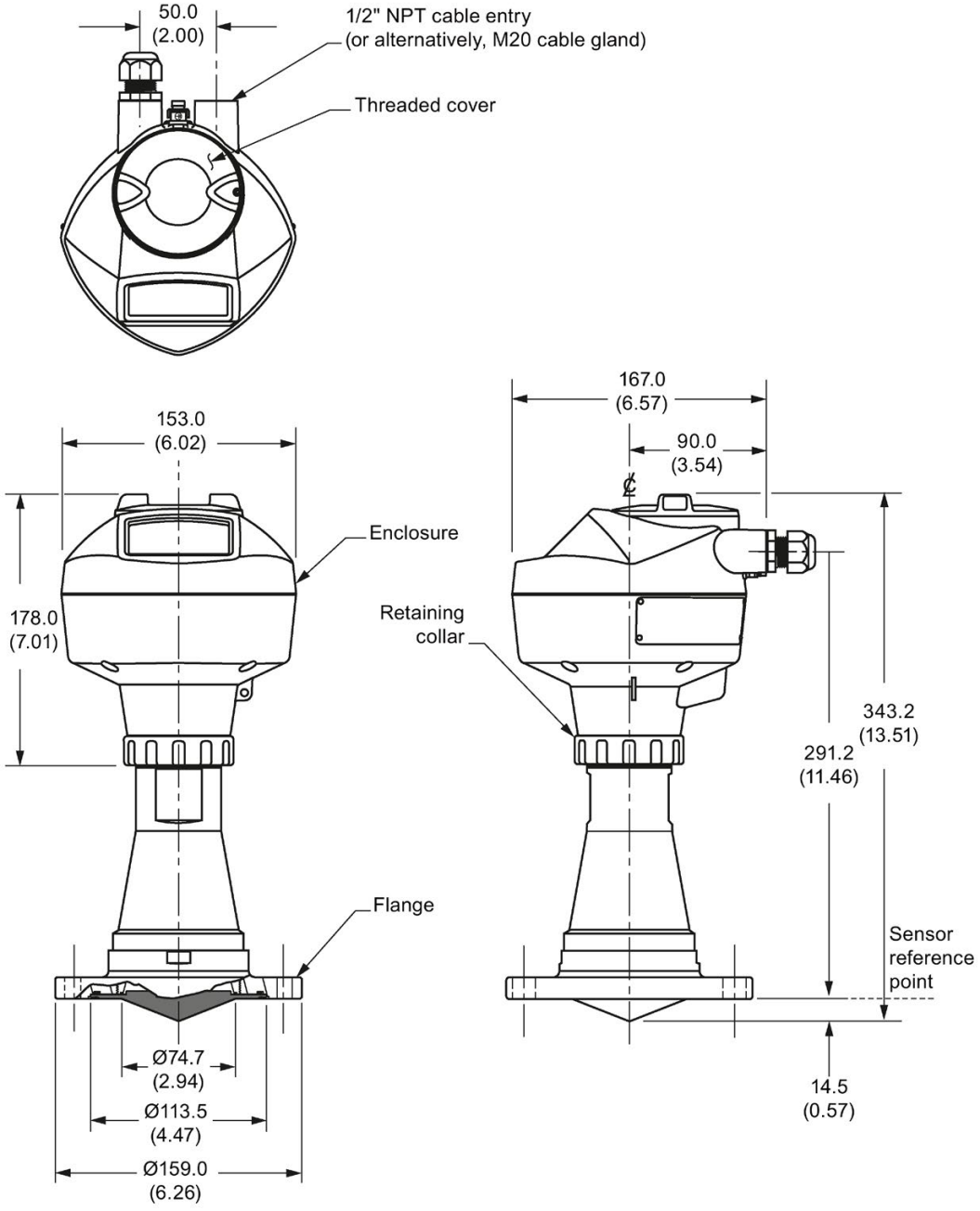

Dimensions in mm (inch)

Note

The cut out of the process connection and the flange are shown for illustration purposes only.

12.19 Hygienic encapsulated antenna (DN50 aseptic clamp to DIN 11864-3)

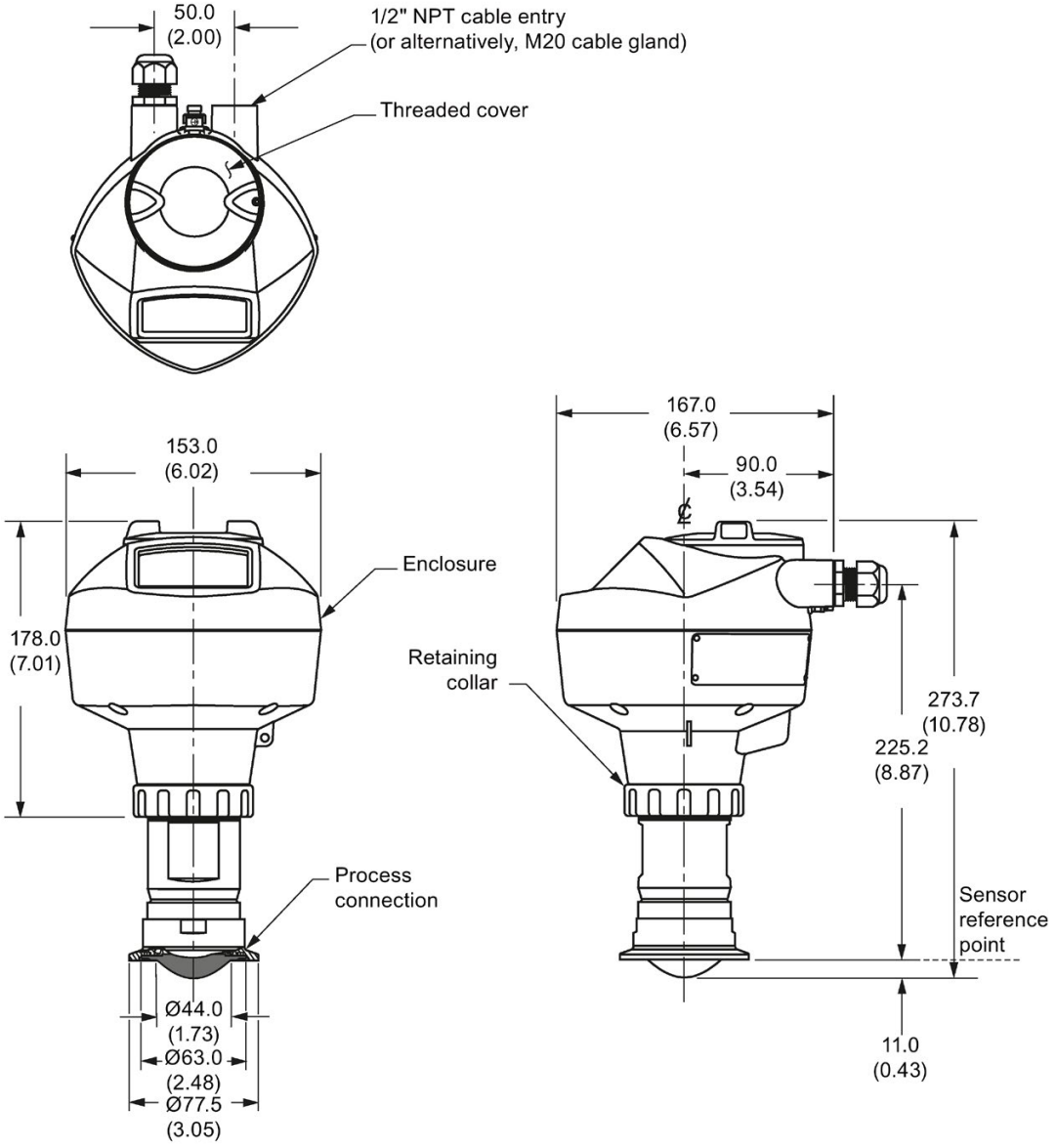

Dimensions in mm (inch)

Note

Cut out of process connection is shown for illustration purposes only.

12.20 Hygienic encapsulated antenna (DN80 aseptic clamp to DIN 11864-3)

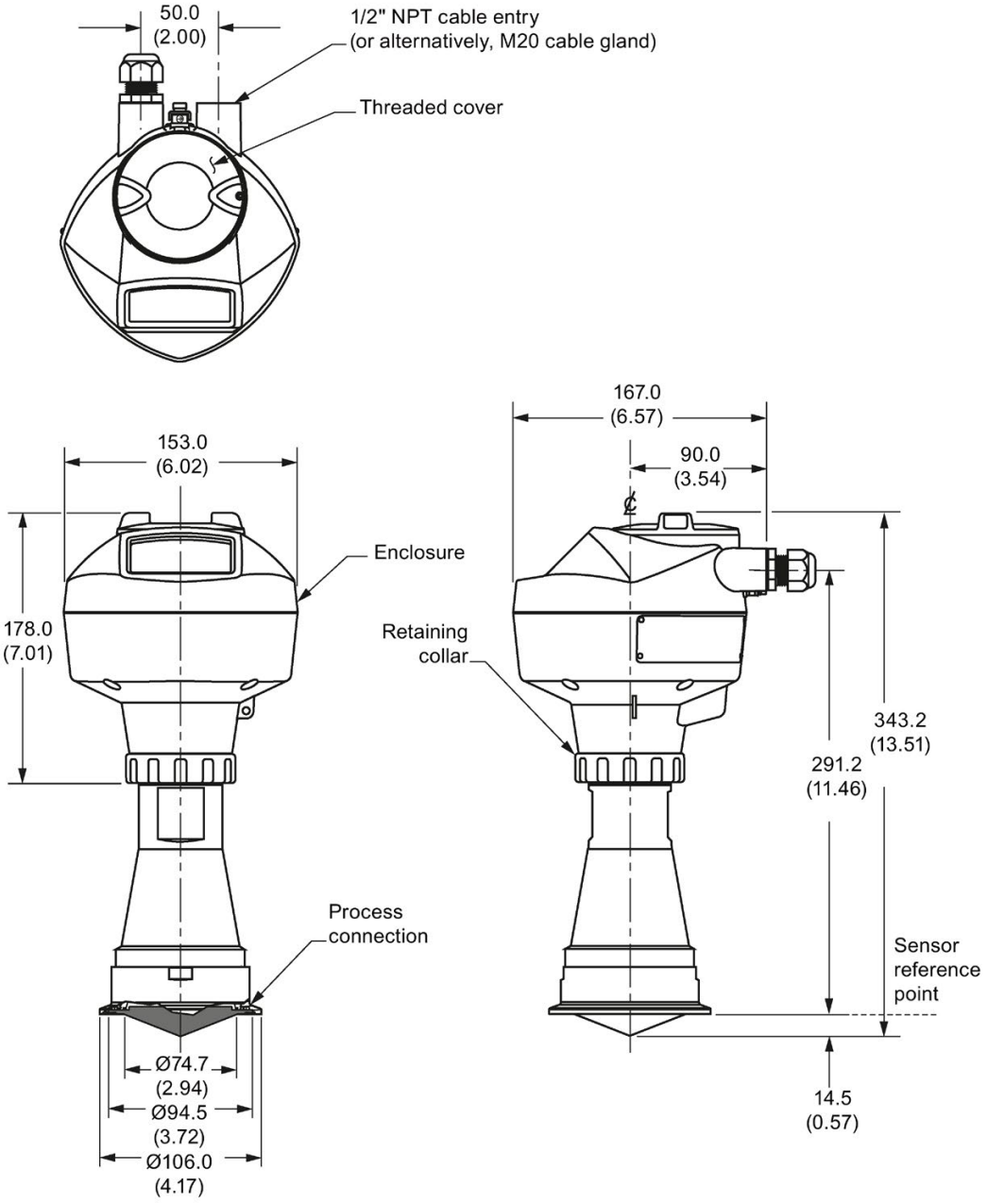

Dimensions in mm (inch)

Note

Cut out of process connection is shown for illustration purposes only.

12.21 Hygienic encapsulated antenna (DN100 aseptic clamp to DIN 11864-3)

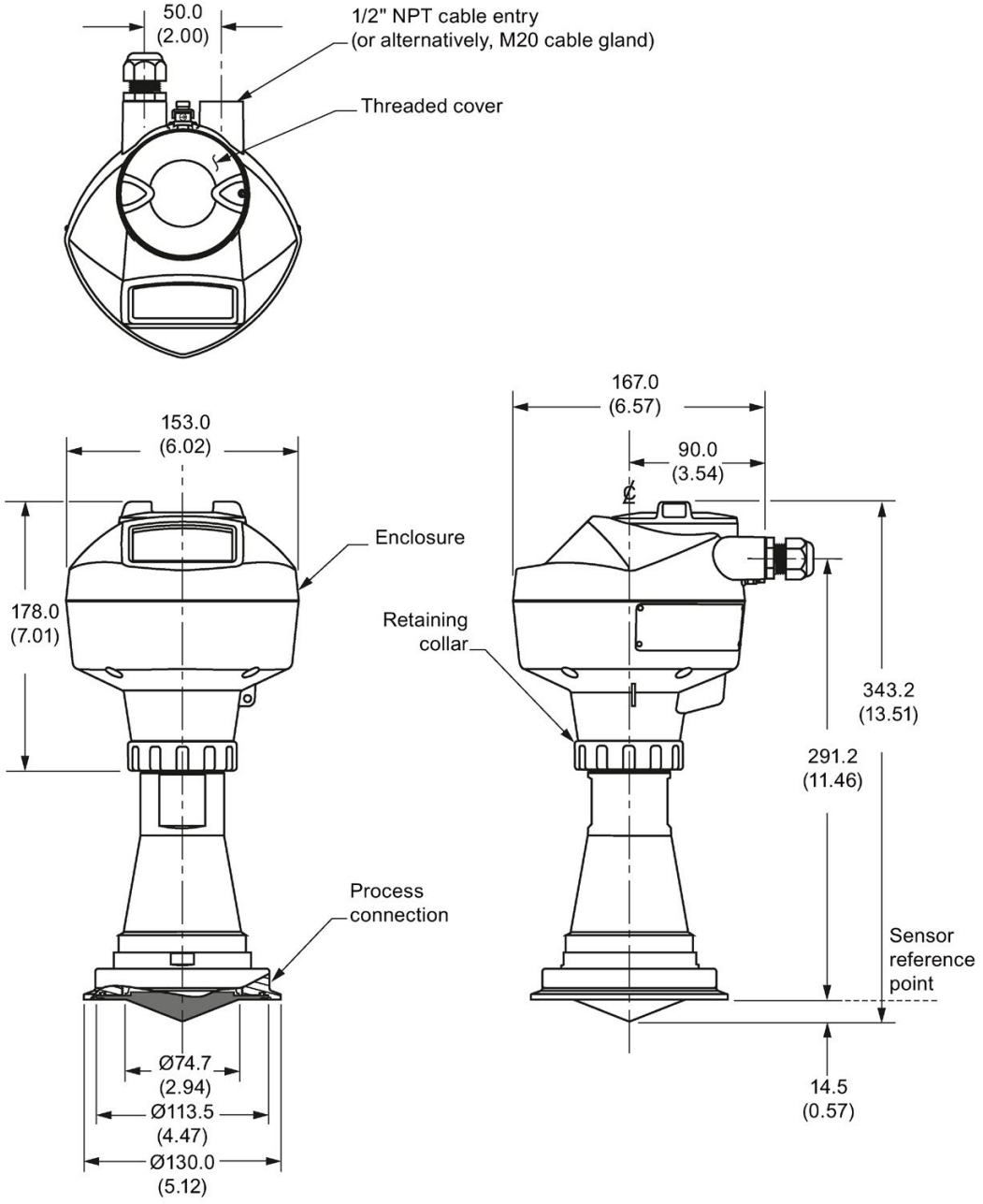

Dimensions in mm (inch)

Note

Cut out of process connection is shown for illustration purposes only.

12.22 Hygienic encapsulated antenna (Tuchenhagen Type N)

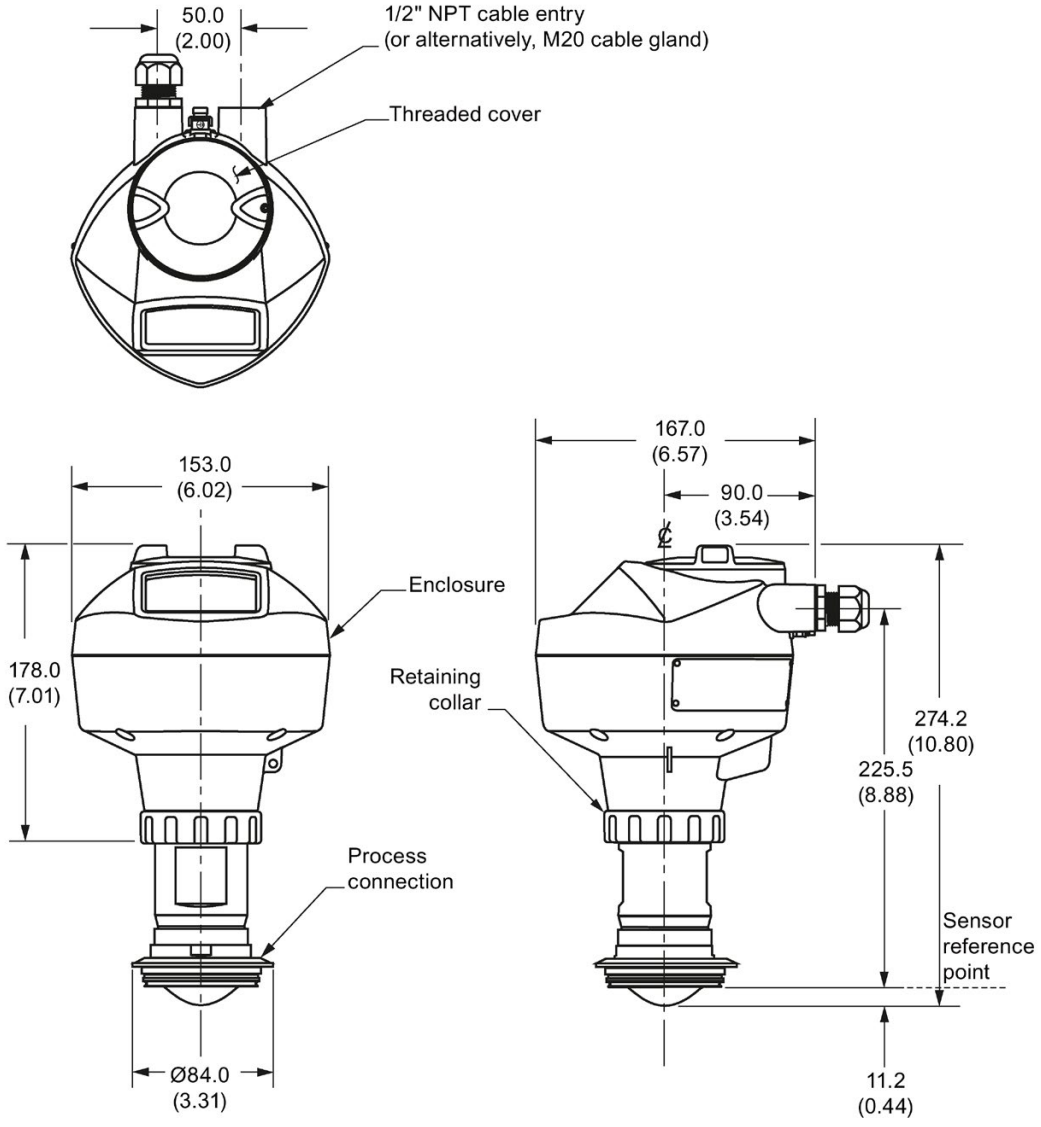

Dimensions in mm (inch)

12.23 Hygienic encapsulated antenna (Tuchenhagen Type F)

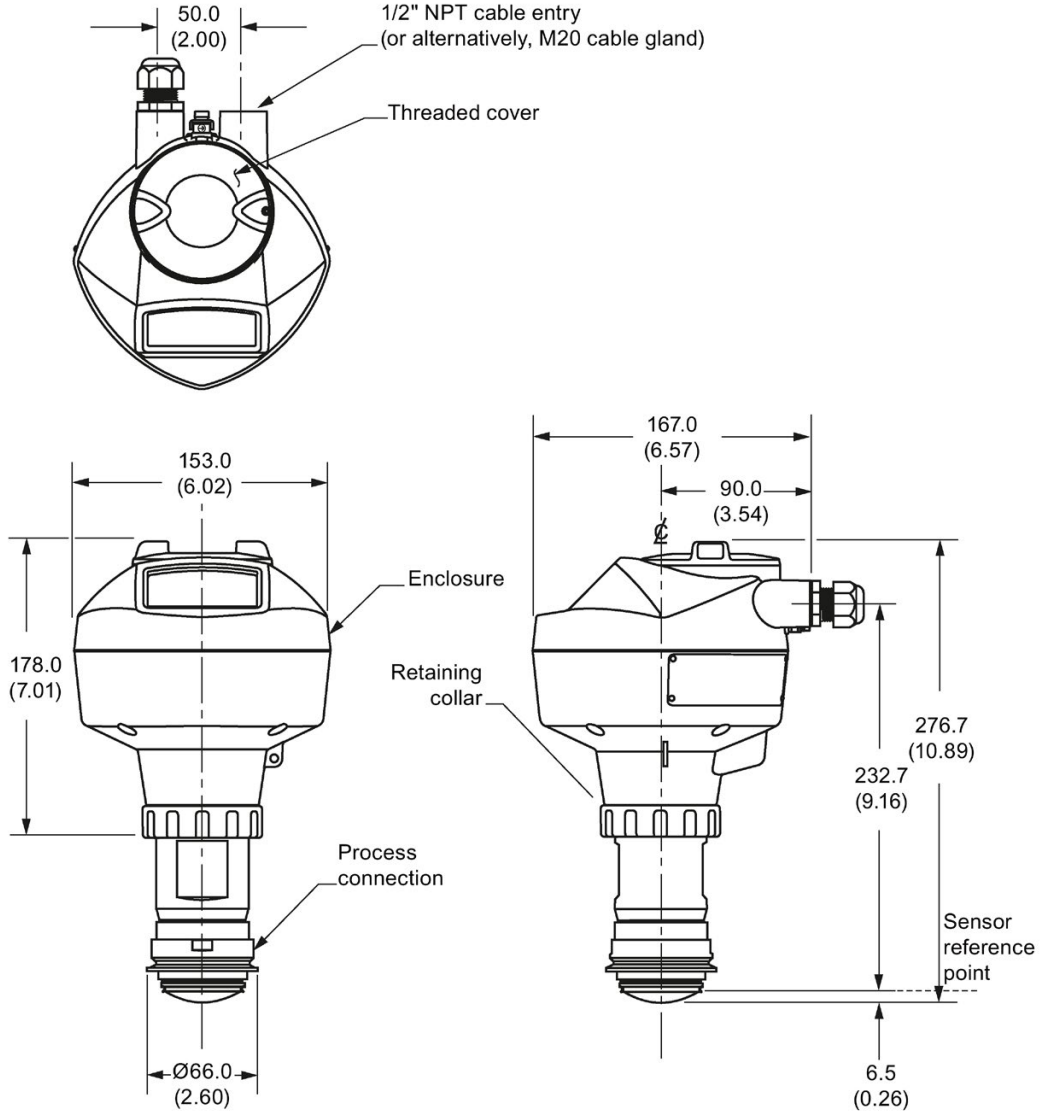

Dimensions in mm (inch)

12.24 Threaded PVDF antenna

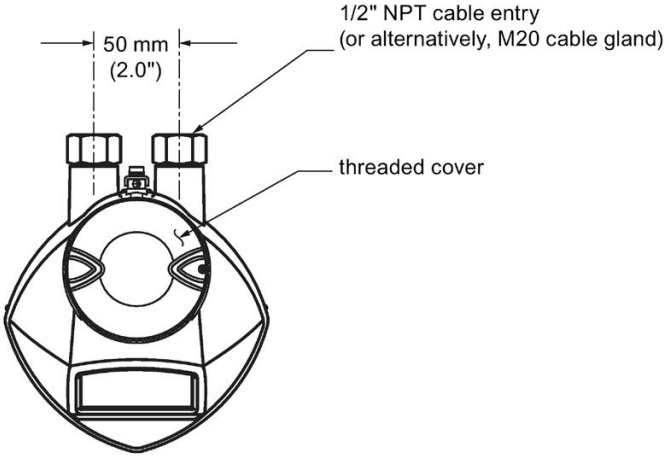

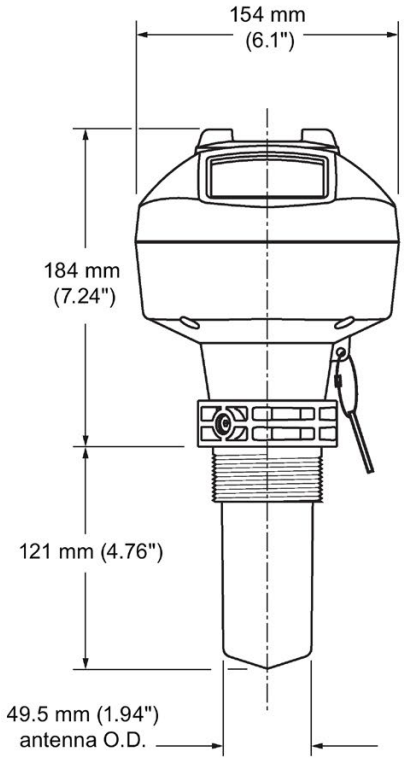

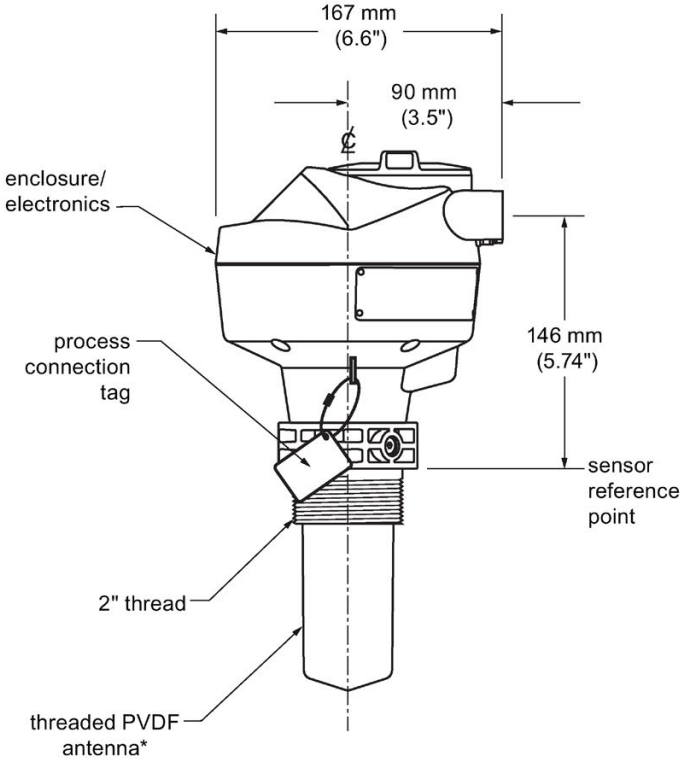

*The color of the antenna may vary.

Threaded PVDF antenna dimensions

Nominal antenna size	Antenna O.D.	Height to sensor reference point [a]	Beam angle [b]	Measurement range
50 mm (2")	49.5 mm (1.94")	121 mm (4.76")	19 degrees	10 m (32.8 ft)[c]

[a] Height from bottom of antenna to sensor reference point as shown: see dimension drawing.

[b] -3dB in the direction of the polarization axis. See Polarization reference point (Page 29) for an illustration.

[c] 20m when installed in stillpipe.

12.25 Threaded connection markings

With the exception of the threaded PVDF antenna, threaded connection markings are found on the flat face/faces of the process connection.

Serial number: a unique number allotted to each process connection, including the date of manufacture (MMDDYY) followed by a number from 001 to 999, (indicating the sequential unit produced).

12.26 Raised-Face flange

Stainless steel or optional alloy N06022/2.4602 (Hastelloy® C-22)

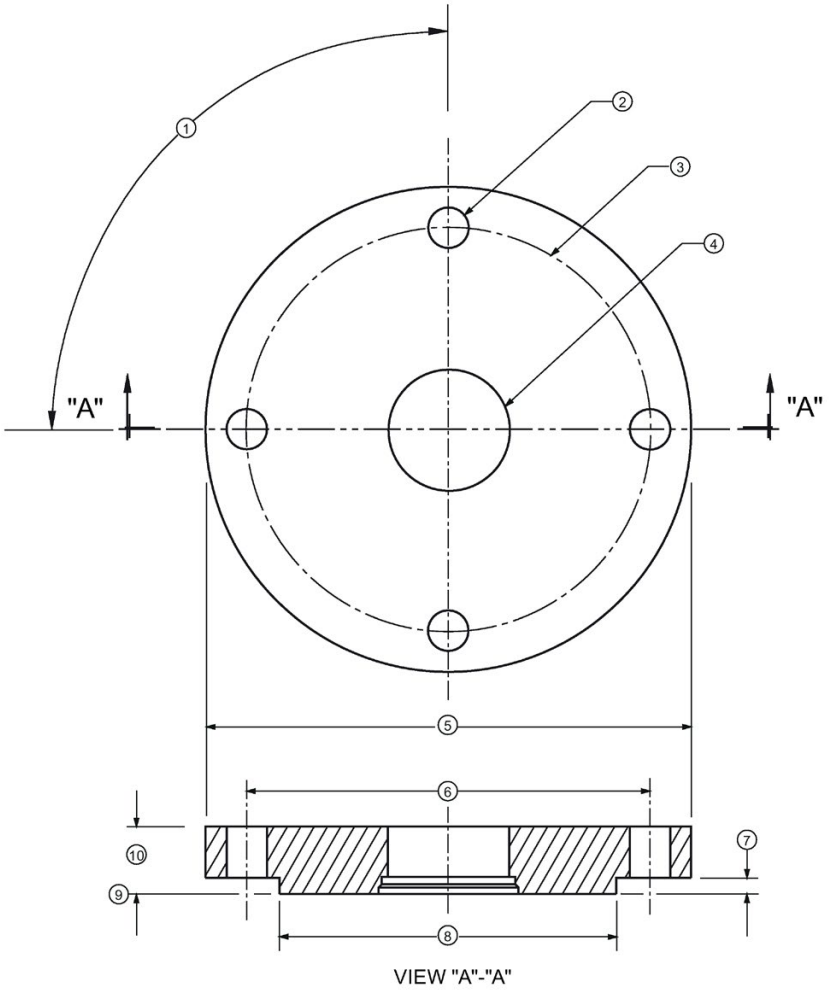

①	angle of adjacent bolt holes	⑥	bolt hole circle diameter
②	bolt hole diameter	⑦	facing height
③	bolt hole circle diameter	⑧	facing diameter
④	waveguide mounting hole	⑨	sensor reference point
⑤	Flange O.D.	⑩	thickness

Raised-Face flange dimensions

Pipe size	Flange bolt hole pattern	⑤ Flange O.D. (mm)	③ Bolt hole circle Ø (mm)	② Bolt hole Ø (mm)	No. of bolts	① Angle of adjacent bolt holes	⑧ Facing Ø (mm)	⑩ Thickness (mm)
DN50	PN10/PN16	165	125	18	4	90	102	18
DN80	PN10/PN16	200	160	18	8	45	138	20
DN100	PN10/PN16	220	180	18	8	45	158	20
DN150	PN10/PN16	285	240	22	8	45	212	22
DN50	PN25/PN40	165	160	18	4	90	138	20
DN80	PN25/PN40	200	160	18	8	45	138	24
DN100	PN25/PN40	235	190	22	8	45	162	24
DN150	PN25/PN40	300	250	26	8	45	218	28

ANSI Raised-Face flange dimensions

Pipe size	Flange bolt hole pattern (lb)	Flange O.D. (mm)	Bolt hole circle Ø (mm)	Bolt hole Ø (mm)	No. of bolts	Angle of adjacent bolt holes	Thickness (mm)	Eyelet feature location		Facing Ø (mm)
								Angle	Distance	Facing thickness (mm)
2"	150	152.4	120.7	19.1	4	90	22.4	45	60.4	92.1
										2.0
3"	150	190.5	152.4	19.1	4		24.4		76.2	127.0
										2.0
4"	150	228.6	190.5	19.1	8	45	31.8	22.5	95.3	157.2
										2.0
2"	300	165.1	127.0	19.1	8		28.4		63.5	92.1
										2.0
3"	300	209.6	168.3	22.3	8		35.1		84.2	127.0
										2.0
4"	300	254.0	200.2	22.3	8		38.1		100.1	157.2
										2.0

Raised-Face flange markings

Blind Flange Markings (Optional Manufacturer's Logo [optional]; Flange Standard; Nominal Size; Material; Heat Code)	Machining Identification			Welded Assembly Identification [a]		
	Serial no.	Logo	Flange series	Flange series	Heat Code no.	Facing
Manufacturer's logo; EN 1092-1 05 'B1'; 'DN50' 'PN16' '1.4404 or 1.4435' A1B2C3	mmddyyxx		xxxxx	xxxxx	A1B2C3	RF

[a] When flange material is alloy N06022/2.4602, additional material and heat code identification is provided.

The flange markings are located around the outside edge of the flange.

Serial number: a unique number allotted to each flange, including the date of manufacture (MMDDYY) followed by a number from 001 to 999 (indicating the sequential unit produced).

Flange series: the Siemens Milltronics drawing identification.

Heat code: a flange material batch code identification.

12.27 Raised-Face flange per EN 1092-1 for flanged encapsulated antenna

Stainless steel

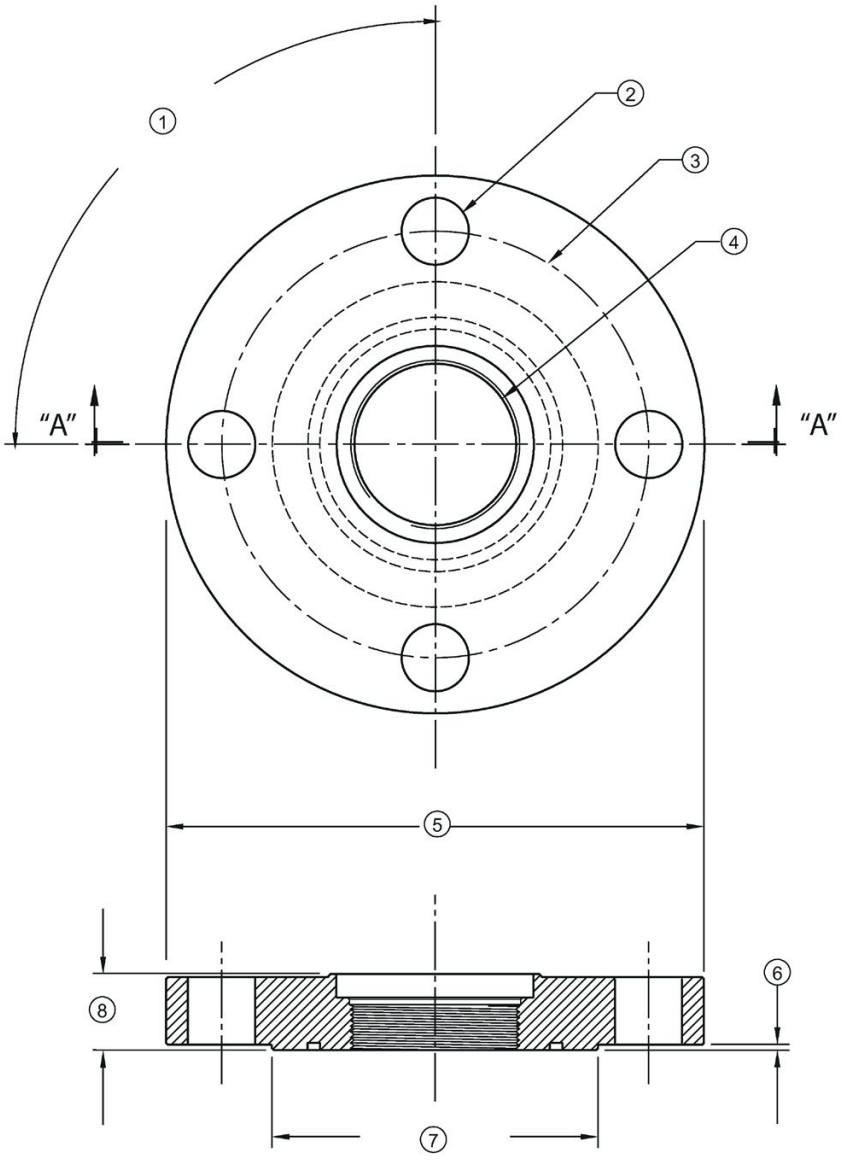

VIEW "A"-"A"

①	angle of adjacent bolt holes	⑤	flange O.D.
②	bolt hole diameter	⑥	facing height
③	bolt hole circle diameter	⑦	facing diameter
④	antenna	⑧	flange thickness

Raised-Face flange dimensions

Pipe size	Flange class	⑤ Flange O.D. [mm (inch)]	③ Bolt hole circle Ø [mm (inch)]	② Bolt hole Ø [mm (inch)]	No. of bolt holes	① Angle of adjacent bolt holes	⑦ Facing Ø [mm (inch)]	⑨ Flange thickness [mm (inch)]	⑥ Flange facing thickness [mm (inch)]
2"	150 LB	152 (5.98)	120.7 (4.75)	19 (0.75)	4	90	92.1 (3.63)	20.6 (0.81)	1.5 (0.06)
3"		190 (7.48)	152.4 (6.00)				127 (5.00)	25.9 (1.02)	2 (0.08)
4"		230 (9.06)	190.5 (7.50)		8	45	157.2 (6.19)		2 (0.08)
6"		280 (11.02)	241.3 (9.50)	22.2 (0.87)			215.9 (8.50)	26.9 (1.06)	1.5 (0.06)
DN50	PN10/16	155 (6.10)	125 (4.92)	18 (0.71)	4	90	102 (4.02)	18 (0.71)	2 (0.08)
DN80		200 (7.87)	160 (6.30)		8	45	138 (5.43)	20 (0.79)	2 (0.08)
DN100		220 (8.66)	180 (7.09)				158 (6.22)		2 (0.08)
DN150		285 (11.22)	240 (9.45)	22 (0.87)			212 (8.35)	22 (0.87)	2 (0.08)
50A	10K	155 (6.10)	120 (4.72)	19 (0.75)	4	90	96 (3.78)	16 (0.63)	2 (0.08)
80A		185 (7.28)	150 (5.91)		8	45	126 (4.96)	18 (0.71)	2 (0.08)
100A		210 (8.27)	175 (6.89)				151 (5.94)		2 (0.08)
150A		280 (11.02)	240 (9.45)	23 (0.91)			212 (8.35)	22 (0.87)	2 (0.08)

Raised-Face flange markings

Blind Flange Markings (Optional Manufacturer's Logo [optional]; Flange Standard; Nominal Size; Material; Heat Code)	Machining Identification			Welded Assembly Identification		
	Serial no.	Logo	Flange series	Flange series	Heat Code no.	Facing
Manufacturer's logo; EN 1092-1 05 'B1'; 'DN50' 'PN16' '1.4404 or 1.4435' A1B2C3	mmddyyxxx		xxxxx	xxxxx	A1B2C3	RF

The flange markings are located around the outside edge of the flange.

Serial number: a unique number allotted to each flange, including the date of manufacture (MMDDYY) followed by a number from 001 to 999 (indicating the sequential unit produced).

Flange series: the Siemens Milltronics drawing identification.

Heat code: a flange material batch code identification.

12.28 Flat-Face flange

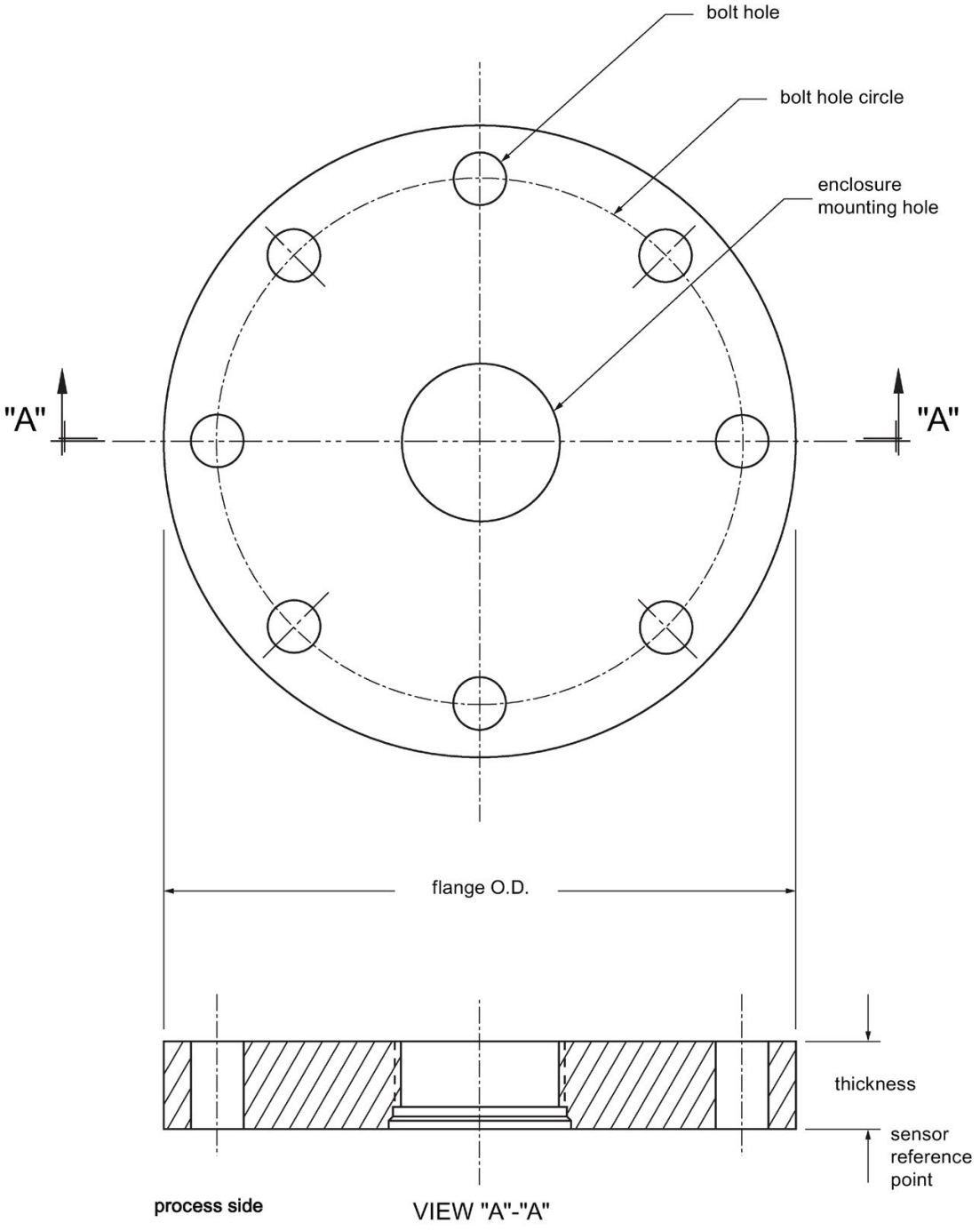

Flat-Face flange dimensions

Flange size [a]	Flange class	Flange O.D.	Bolt hole circle Ø	Bolt hole Ø	No. of bolt holes	Thickness
2"	ASME 150 lb	6.0"	4.75"	0.75"	4	0.88"
3"	ASME 150 lb	7.5"	6.0"	0.75"	4	0.96"
4"	ASME 150 lb	9.0"	7.50"	0.75"	8	1.25"
2"	ASME 300 lb	6.50"	5.00"	0.75"	8	1.12"
3"	ASME 300 lb	8.25"	6.62"	0.88"	8	1.38"
4"	ASME 300 lb	10.00"	7.88"	0.88"	8	1.50"
DN50	EN PN16	165 mm	125 mm	18 mm	4	24.4 mm
DN80	EN PN16	200 mm	160 mm	18 mm	8	31.8 mm
DN100	EN PN16	220 mm	180 mm	18 mm	8	31.8 mm
DN50	EN PN40	165 mm	125 mm	18 mm	4	25.4 mm
DN80	EN PN40	200 mm	160 mm	18 mm	8	31.8 mm
DN100	EN PN40	235 mm	190 mm	22 mm	8	38.1 mm
50A	JIS 10K	155 mm	120 mm	19 mm	4	23.8 mm
80A	JIS 10K	185 mm	150 mm	19 mm	8	24.4 mm
100A	JIS 10K	210 mm	175 mm	19 mm	8	28.5 mm

[a] A 2" flange is designed to fit a 2" pipe: for actual flange dimensions see Flange O.D. Flange markings located around the outside edge of the flat faced flange identify the flange assembly on which the device is mounted.

Flat-Face flange markings

Flat Face Flange Identification							Welded Assembly Identification	
Serial No.	Logo	Flange series			Material	Heat code	Flange series	Heat code no.
		Series	Nominal size					
MMDDYYXXX		25556	2	150	316L/ 1.4404 or 316L/ 1.4435	A1B2C3	25546	A1B2C3
			DN80	PN16				

Serial number: A unique number allotted to each flange, including the date of manufacture (MMDDYY) followed by a number from 001 to 999 (indicating the sequential unit produced).

Flange series: The Siemens Milltronics drawing identification.

Nominal size: The flange size followed by the hole pattern for a particular flange class. For example:

- A 2 inch ASME B16.5 150 lb class flange (North America)
- A DN80 EN 1092-1 PN16 class flange (Europe)

Material: The basic flange material (AISI or EU material designation). North American material codes are followed by European ones. For example, material designation 316L/1.4404.

Heat code: A flange material batch code identification.

12.29 Aseptic/hygienic flange DN50, DN80, DN100 for DIN 11864-2

Aseptic/hygienic flange DN50

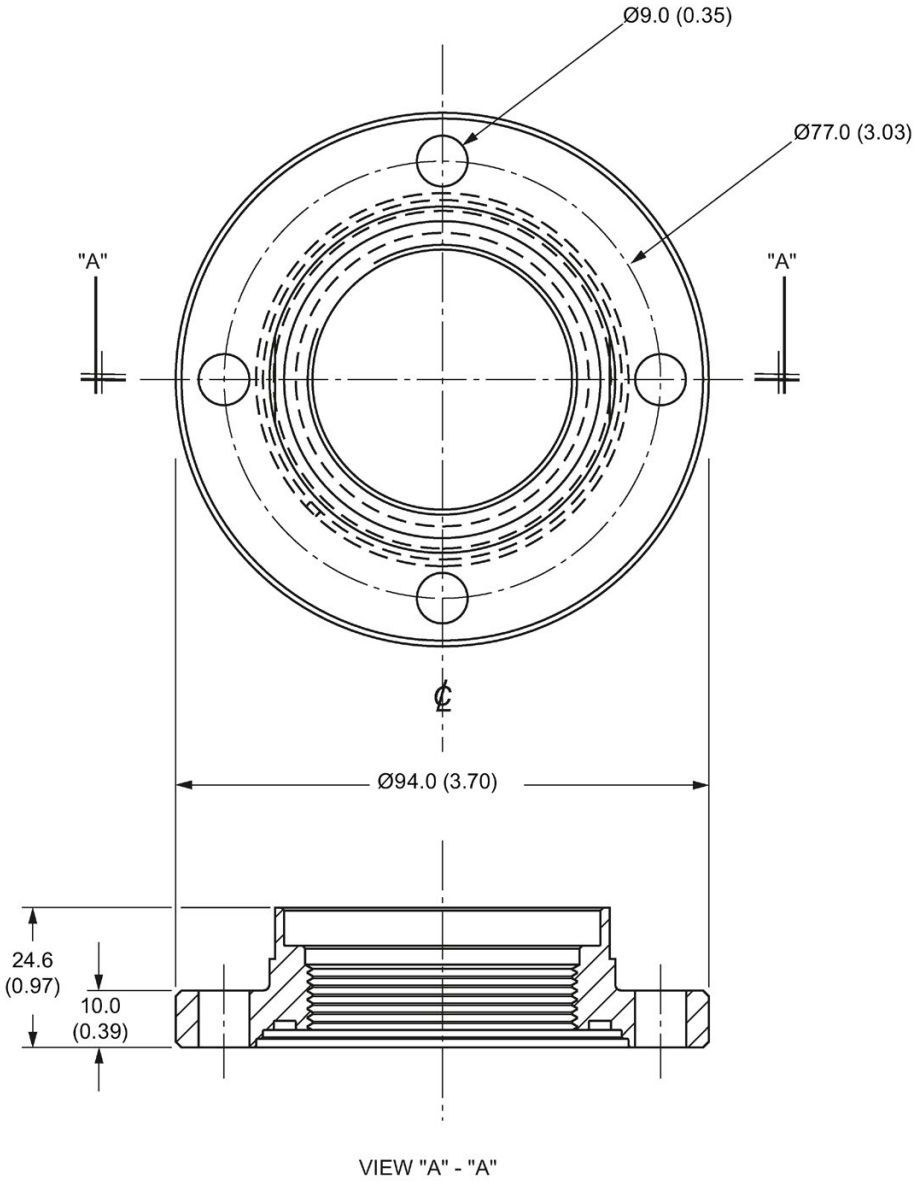

Dimensions in mm (inch)

Aseptic/hygienic flange DN80

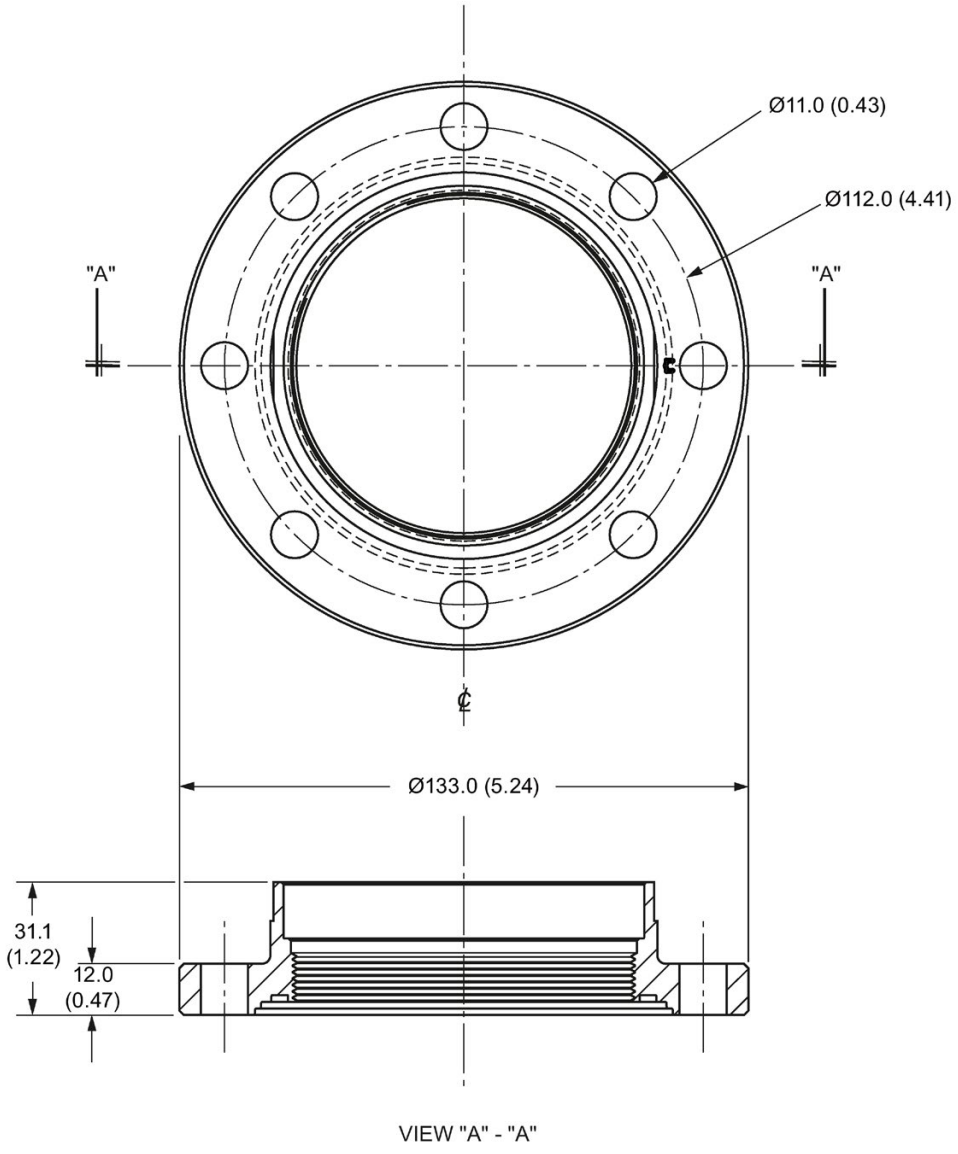

VIEW "A" - "A"

Dimensions in mm (inch)

Aseptic/hygienic flange DN100

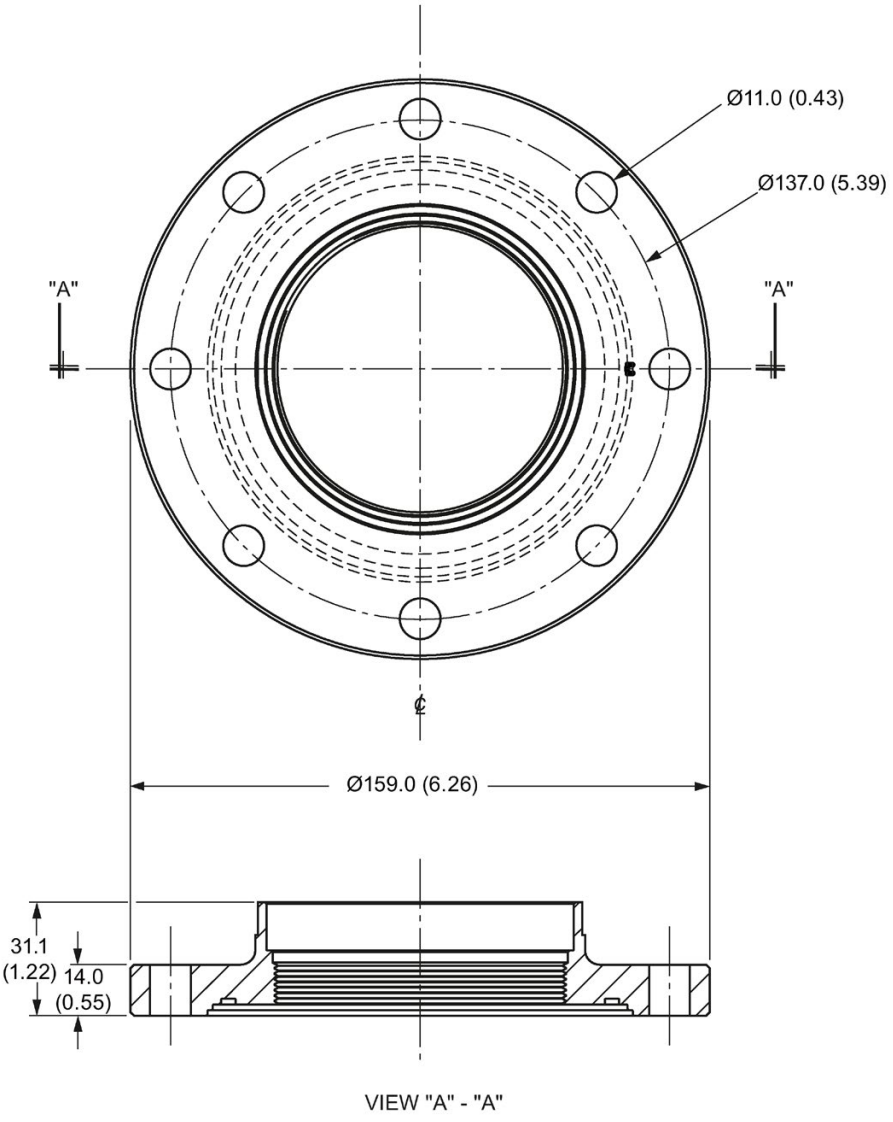

VIEW "A" - "A"

Dimensions in mm (inch)

12.30 Process connection tag (pressure rated versions)

For pressure-rated versions only, the process connection label lists the following information:

Process connection tag (pressure rated versions)

Item	Sample Text	Comments/Explanation
SERIAL #	GYZ / 00000000	Pressure Boundary Assembly
NOMINAL PIPE SIZE (DN)	4 INCH / 100mm	Nominal Pipe Size
INSTRUMENT MAWP (PS)	11.0 **BAR**	Maximum Allowable Working Pressure at Design Temperature for the device
DESIGN TEMP. (TS)	200 **ºC**	Maximum Allowable Working Temperature
MINIMUM PROCESS	15.9 **BAR AT** 40 **ºC**	Minimum Wetted Process Conditions
TEST PRESSURE (PT)	22.7 **BAR**	Production Test Pressure
TEST DATE	10/11/11	Date of Pressure Test (Year/Month/Day)
CONNECTION SERIES	ASME B16.5	Flange Series: dimensional pattern based on ASME B16.5 flange standards
PROCESS SERIES	25546	Pressure Tag Family Series
WETTED NON-METALLICS	TFM	Antenna Emitter
WETTED METALLICS	316L	Process Connection Material(s)
WETTED SEALS	FKM	Seal Material(s)

- Minimum Wetted Process Conditions: the minimum pressure and temperature to which the device assembly may be exposed in the process, and continue to provide a pressure-retaining function.
- Pressure Tag Family Series: the identification number used to indicate specific process connection information relating to operating conditions.
- For Flanged encapsulated antenna: this information is laser-etched on antenna body

BACK FACE	
Sample Text	**Comments/Explanation**
CRN 0Fxxxxx.5	Canadian Registration Number (CRN)

Appendix A: Technical reference

A

Note

Where a number follows the parameter name [for example, **Master Reset (4.1.)**] this is the parameter access number via the handheld programmer. See Parameter Reference (Page 125) for a complete list of parameters.

A.1 Principles of operation

SITRANS LR250 is a 2-wire 25 GHz pulse radar level transmitter for continuous monitoring of liquids and slurries. (The microwave output level is significantly less than that emitted from cellular phones.) Radar level measurement uses the time of flight principle to determine distance to a material surface. The device transmits a signal and waits for the return echo. The transit time is directly proportional to the distance from the material.

Pulse radar uses polarized electromagnetic waves. Microwave pulses are emitted from the antenna at a fixed repetition rate, and reflect off the interface between two materials with different dielectric constants (the atmosphere and the material being monitored).

Electromagnetic wave propagation is virtually unaffected by temperature or pressure changes, or by changes in the vapor levels inside a vessel. Electromagnetic waves are not attenuated by dust.

SITRANS LR250 consists of an enclosed electronic circuit coupled to an antenna and process connection. The electronic circuit generates a radar signal (25 GHz) that is directed to the antenna.

The signal is emitted from the antenna, and the reflected echoes are digitally converted to an echo profile. The profile is analyzed to determine the distance from the material surface to the sensor reference point. See Dimension drawings (Page 195). This distance is used as a basis for the display of material level and mA output.

A.2 Echo processing

A.2.1 Process Intelligence

The signal processing technology embedded in Siemens radar level devices is known as **Process Intelligence**.

Process intelligence provides high measurement reliability regardless of the dynamically changing conditions within the vessel being monitored. The embedded Process Intelligence dynamically adjusts to the constantly changing material surfaces within these vessels.

Process Intelligence is able to differentiate between the true microwave reflections from the surface of the material and unwanted reflections being returned from obstructions such as seam welds or supports within a vessel. The result is repeatable, fast and reliable measurement. This technology was developed as result of field data gained over some twenty years from more than 1,000,000 installations in many industries around the world.

Higher order mathematical techniques and algorithms are used to provide intelligent processing of microwave reflection profiles. This "knowledge based" technique produces superior performance and reliability.

A.2.2 Echo Selection

Time Varying Threshold (TVT)

A Time Varying Threshold (TVT) hovers above the echo profile to screen out unwanted reflections (false echoes).

In most cases the material echo is the only one which rises above the default TVT.

In a vessel with obstructions, a false echo may occur. See Auto False Echo Suppression (Page 245) for more details.

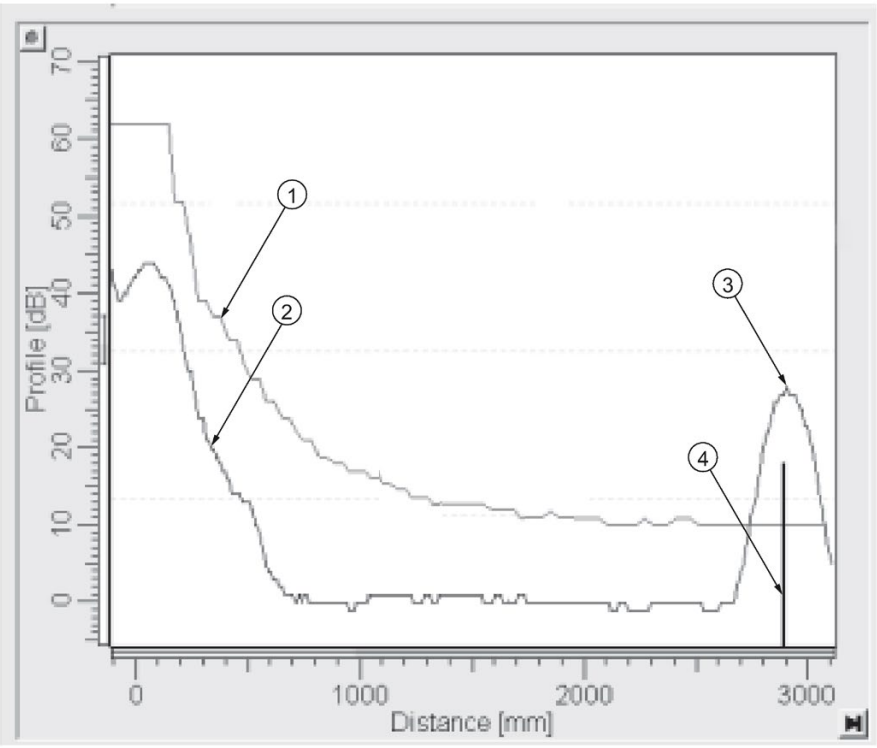

① default TVT
② echo profile
③ material level
④ echo marker

The device characterizes all echoes that rise above the TVT as potential good echoes. Each peak is assigned a rating based on its strength, area, height above the TVT, and reliability, amongst other characteristics.

Algorithm (2.5.7.1.)

The true echo is selected based on the setting for the Echo selection algorithm. Options are **t**rue **F**irst Echo, **L**argest Echo, or **b**est of **F**irst and **L**argest.

Position Detect (2.5.7.2.)

The echo position detection algorithm determines which point on the echo will be used to calculate the precise time of flight, and calculates the range using the calibrated propagation velocity [see **Propagation Factor (2.5.3.)** for values]. There are three options:

- **Center**
- **Hybrid** (Center and CLEF)
- **CLEF** (Constrained Leading Edge Fit)

Center

Uses center of the echo.

Hybrid

Uses the Center algorithm for the top part of the vessel, and the CLEF algorithm for the part nearest the vessel bottom, according to the setting for **CLEF range**.

CLEF (Constrained Leading Edge Fit)

- Uses the leading edge of the echo.
- Is used mainly to process the echo from materials with a low dK value.

In an almost empty flat-bottomed vessel, a low dK material may reflect an echo weaker than the echo from the vessel bottom. The echo profile shows these echoes merging. The device may then report a material level equal to or lower than empty.

The CLEF algorithm enables the device to report the level correctly.

Example: CLEF off: Position set to Hybrid

Vessel height: 1.5 m; CLEF range set to 0 (Center algorithm gives the same result.)

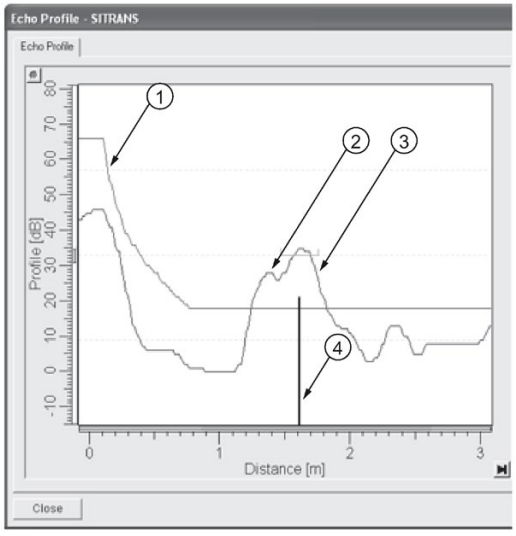

① default TVT
② material echo
③ vessel bottom echo selected
④ echo marker

Example: CLEF enabled

Vessel height: 1.5 m; CLEF range set to 0.5 m

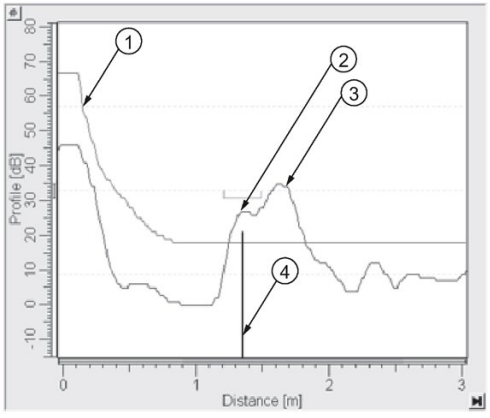

① default TVT
② material echo selected
③ vessel bottom echo
④ echo marker

A.2.3 CLEF Range

CLEF Range (2.5.7.4.) is referenced from Low Calibration Point (process empty level). When the **Hybrid** algorithm is selected in **Position Detect (2.5.7.2.)**, the CLEF algorithm will be applied up to the limit of CLEF Range. Above this limit the Center algorithm will be applied.

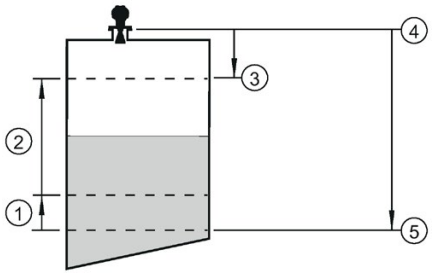

① CLEF Range
② (Center algorithm applied)
③ High Calibration Point (process full level)
④ Sensor reference point
⑤ Low Calibration Point (process empty level)

A.2.4 Measurement Response

Note

Units are defined in **Units (2.3.1.)** and are in meters by default.

Response Rate (2.3.8.1.) limits the maximum rate at which the display and output respond to changes in the measurement. There are three preset options: slow, medium, and fast.

Once the real process fill/empty rate (m/s by default) is established, a response rate can be selected that is slightly higher than the application rate. Response Rate automatically adjusts the filters that affect the output response rate.

Note

Changing Response Rate resets **Fill Rate per Minute (2.3.8.2.)**, **Empty Rate per Minute (2.3.8.3.)**, and **Shots (2.5.6.)**.

Response Rate (2.3.8.1)		Fill Rate (2.3.8.2)/Empty Rate (2.3.8.3)	
*	**Slow**	0.1 m/min (0.32 ft/min)	25
	Medium	1.0 m/min (3.28 ft.min)	10
	Fast	10.0 m/min (32.8 ft/min)	5

A.2.5 Echo Threshold

Confidence (2.5.9.1.) describes the quality of an echo. Higher values represent higher quality. **Echo Threshold (2.5.7.3.)** defines the minimum confidence value required for an echo to be accepted as valid and evaluated.

A.2.6 Echo Lock

If the echo selected by **Algorithm** is within the Echo Lock window, the window is centered about the echo, which is used to derive the measurement. In radar applications, two measurement verification options are used:

Lock Off

SITRANS LR250 responds immediately to a new selected echo (within the restrictions set by the Maximum Fill / Empty Rate), but measurement reliability is affected.

Material Agitator

A new measurement outside the Echo Lock Window must meet the sampling criteria before the window will move to include it.
The other available options, **Maximum Verification** and **Total Lock** are not recommended for radar.

A.2.7 Auto False Echo Suppression

Note

- For detailed instructions on using this feature via AMS see TVT (time varying threshold) (Page 86).
- For detailed instructions on using this feature via the handheld programmer see **Auto False Echo Suppression (2.5.10.1.).**

Auto False Echo Suppression is designed to learn a specific environment (for example, a particular vessel with known obstructions), and in conjunction with Auto False Echo Suppression Range to remove false echoes appearing in front of the material echo.

The material level should be below all known obstructions at the moment when Auto False Echo Suppression learns the echo profile. Ideally the vessel should be empty or almost empty, and if an agitator is present, it should be running.

The device learns the echo profile over the whole measurement range and the TVT is shaped around all echoes present at that moment.

Auto False Echo Suppression Range (2.5.10.2.)

Auto False Echo Suppression Range specifies the range within which the learned TVT is applied. Default TVT is applied over the remainder of the range.

The learned TVT screens out the false echoes caused by obstructions. The default TVT allows the material echo to rise above it.

Auto False Echo Suppression Range must be set to a distance shorter than the distance to the material level when the environment was learned, to avoid the material echo being screened out.

Example before Auto False Echo Suppression

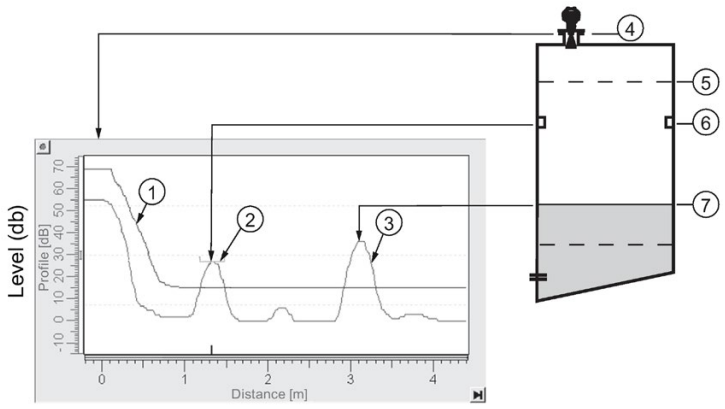

① Default TVT
② False echo
③ Material echo
④ Sensor reference point
⑤ High calibration point = 0
⑥ Obstruction at 1.3. m
⑦ Material level at 3.2 m

Example after Auto False Echo Suppression

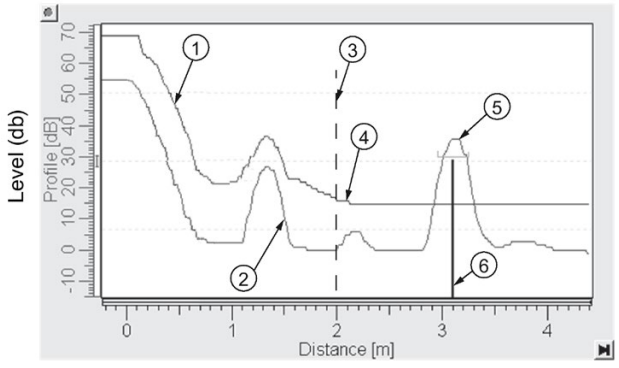

Auto False Echo Suppression Range set to 2 m

① Learned TVT
② False echo
③ Auto False Echo Suppression Range
④ Default TVT
⑤ Material echo
⑥ Echo marker

A.2.8 Measurement Range

Near Range (2.5.1.)

Near Range programs SITRANS LR250 to ignore the zone in front of the antenna. The default blanking distance is 50 mm (1.97") from the end of the antenna.

Near Range allows you to increase the blanking value from its factory default. But **Auto False Echo Suppression (2.5.10.1.)** is generally recommended in preference to extending the blanking distance from factory values.

Far Range (2.5.2.)

Far Range can be used in applications where the base of the vessel is conical or parabolic. A reliable echo may be available below the vessel empty distance, due to an indirect reflection path.

Increasing Far Range to 30% or 40% can provide stable empty vessel readings.

A.2.9 Damping

Filter Time Constant (2.6.7.1) smooths out the response to a sudden change in level. This is an exponential filter and the engineering unit is always in seconds.

In 5 time constants the output rises exponentially: from 63.2% of the change in the first time constant, to almost 100% of the change by the end of the 5th time constant.

Damping example

time constant = 2 seconds
input (level) change = 2 m

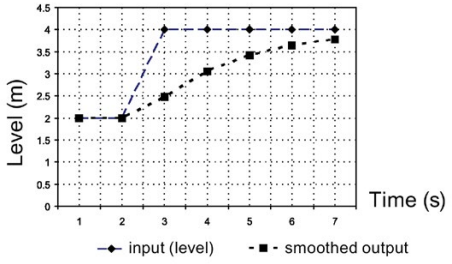

A.2.10 Loss of Echo (LOE)

A loss of echo (LOE) occurs when the calculated measurement is judged to be unreliable because the echo confidence value has dropped below the echo confidence threshold.

Confidence (2.5.9.1.) describes the quality of an echo. Higher values represent higher quality.

Echo Threshold (2.5.7.3.) defines the minimum confidence value required for an echo to be accepted as valid and evaluated.

If the LOE condition persists beyond the time limit set in **LOE Timer (2.3.6.)** the LCD displays the Service Required icon, and the text region displays the fault code **S: 0** and the text **LOE**.

If two faults are present at the same time, the fault code, error text, and error icon for each fault are displayed alternately. For example, Loss of Echo and faulty power supply:

Upon receiving a reliable echo, the loss of echo condition is aborted, the Service Required icon and error message are cleared, and the reading returns to the current level.

A.2.10.1 LOE Timer

Loss of Echo (LOE) Timer (2.3.6.) determines the length of time a Loss of Echo (LOE) condition will persist before the function block will show a status of BAD or UNCERTAIN. The default is 100 seconds.

A.3 Maximum Process Temperature Chart

⚠ WARNING

Exceeded maximum internal and process temperatures

Danger of device malfunction

- Internal temperature must not exceed +80 ° C (+176 °F).
- Process temperature must not exceed limits specified by the antenna type.

Note

- The chart below is for guidance only.
- The chart does not represent every possible process connection arrangement. For example, it will NOT apply if you are mounting SITRANS LR250 directly on a metallic vessel surface.
- The chart does not take into consideration heating from direct sunlight exposure.

Maximum Process Temperatures versus allowable ambient

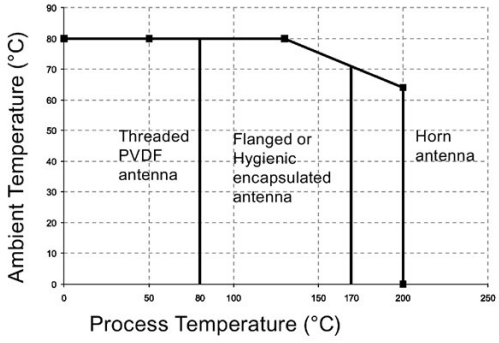

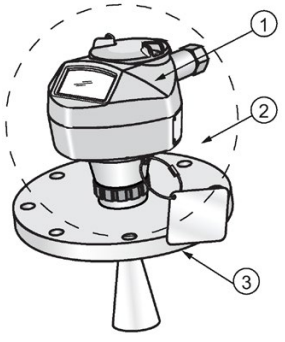

① Internal enclosure temperature

② Ambient temperature

③ Process temperature (at process connection)

Where the chart does not apply, please use your own judgement regarding the use of SITRANS LR250.

If the internal temperature exceeds the maximum allowable limit, a sun shield or a longer nozzle may be required.

See **Minimum Value (3.3.1.)** and **Maximum Value (3.3.2.)** to monitor the Internal Temperature.

A.4 Process Pressure/Temperature derating curves

⚠ WARNING

Exceeded maximum permissible operating pressure

Danger of injury or poisoning.

The maximum permissible operating pressure depends on the device version. The device can be damaged if the operating pressure is exceeded. Hot, toxic and corrosive process media could be released.

- Make sure that the device is suitable for the maximum permissible operating pressure of your system.

⚠ DANGER

Pressure applications

Danger to personnel, system and environment will result from improper disassembly.

- Never attempt to loosen, remove, or disassemble process connection while vessel contents are under pressure.

⚠ WARNING

Pressure applications

Danger to personnel, system and environment can result from improper installation.

- Improper installation may result in loss of process pressure.

⚠ WARNING

Unsuitable connecting parts

Risk of injury or poisoning.

In case of improper mounting, hot, toxic, and corrosive process media could be released at the connections.

- Ensure that connecting parts (such as flange gaskets and bolts) are suitable for connection and process media.

Note

Material compatibility

Siemens can provide you with support concerning selection of sensor components wetted by process media. However, you are responsible for the selection of components. Siemens accepts no liability for faults or failures resulting from incompatible materials.

A.4.1 Pressure Equipment Directive, PED, 14/68/EU

Siemens Level Transmitters with flanged, threaded, or sanitary clamp type process mounts have no pressure-bearing housing of their own and, therefore, do not come under the Pressure Equipment Directive as pressure or safety accessories (see EU Commission Guideline A-08 and A-20).

A.4.2 Horn antenna

1.5", 2" and 3" [NPT, G (BSPP), R (BSPT)] Threaded Versions

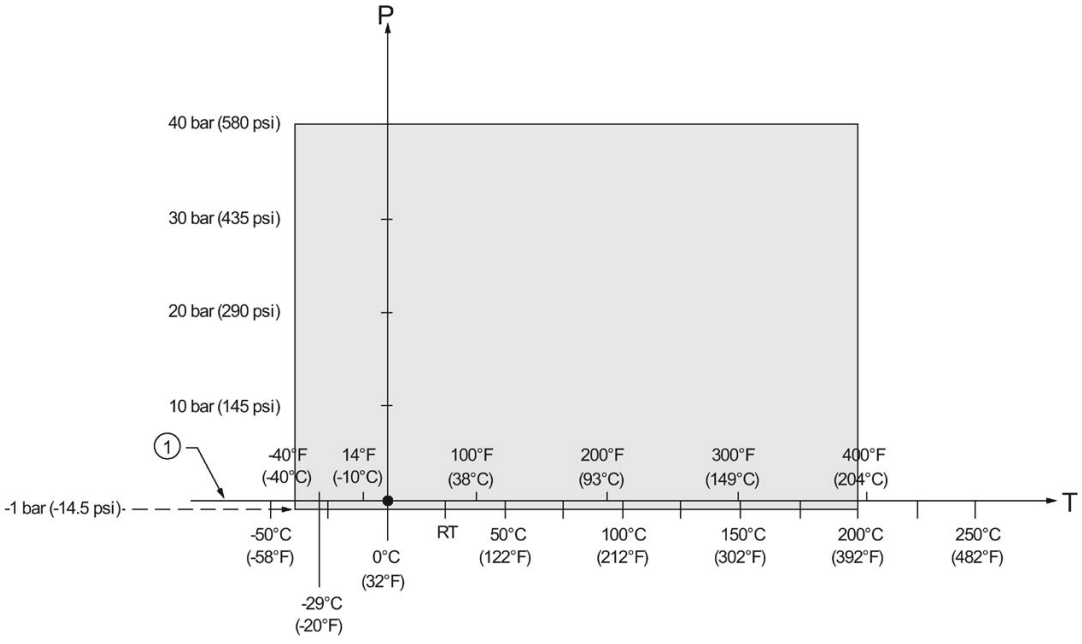

① Atmospheric

P Allowable operating pressures

T Allowable operating temperatures

A.4.3 Flanged horn antenna

JIS B 2220, 10K: 50A, 80A, and 100A

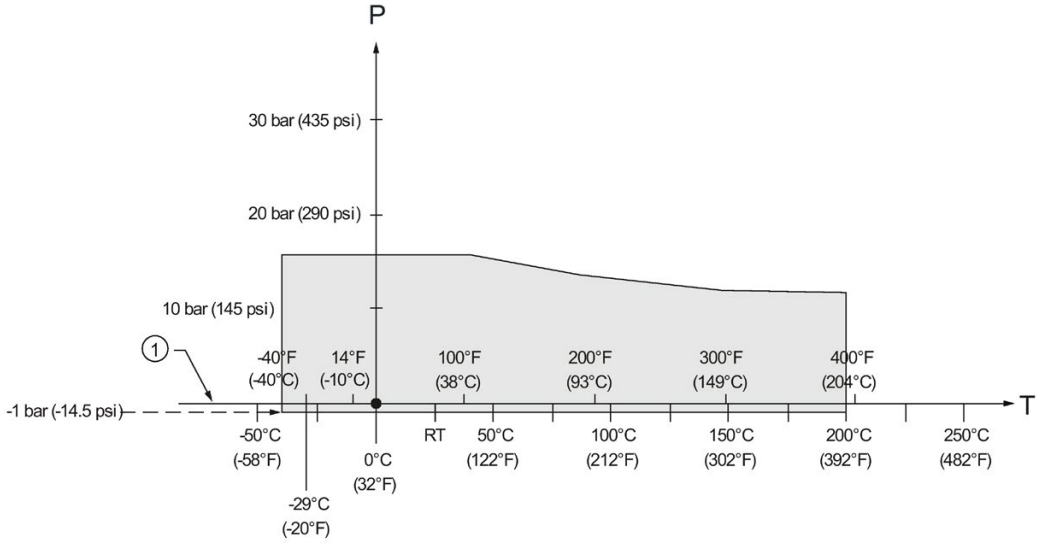

① Atmospheric

P Allowable operating pressures

T Allowable operating temperatures

EN1092-1, PN16: DN50, DN80, DN100, and DN150

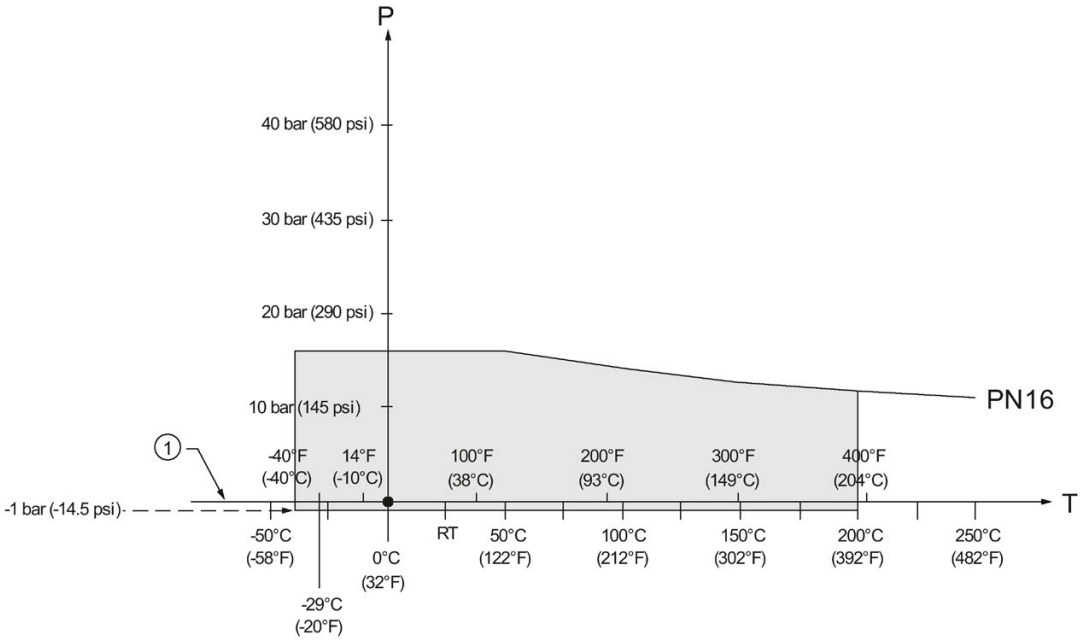

① Atmospheric

P Allowable operating pressures

T Allowable operating temperatures

EN1092-1, PN40: DN50, DN80, DN100, and DN150

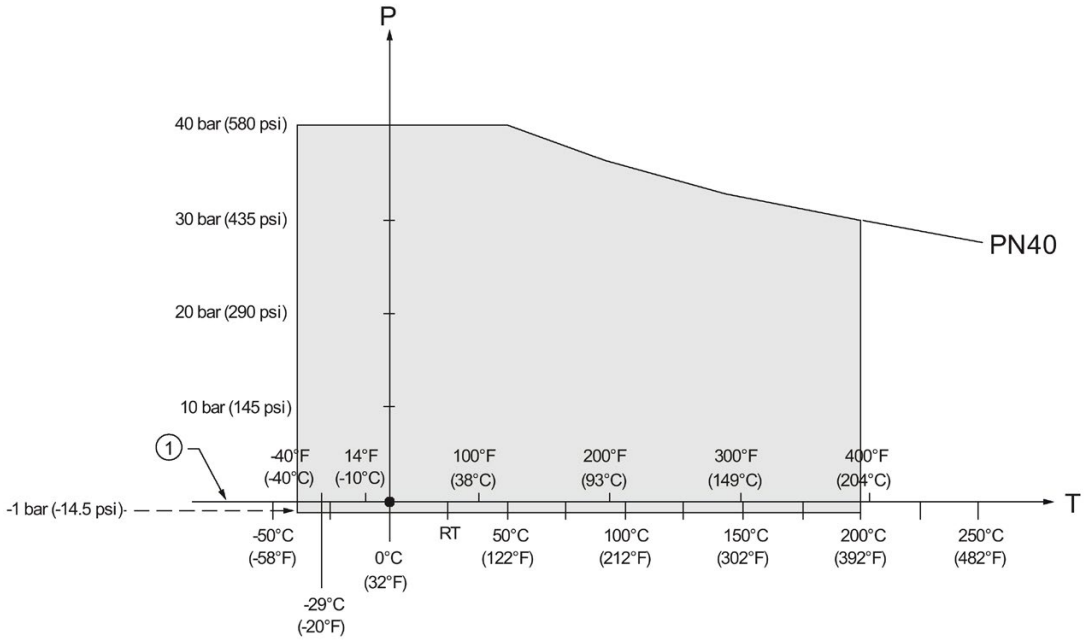

① Atmospheric

P Allowable operating pressures

T Allowable operating temperatures

ASME B16.5, Class 150: 2", 3", and 4" NPS

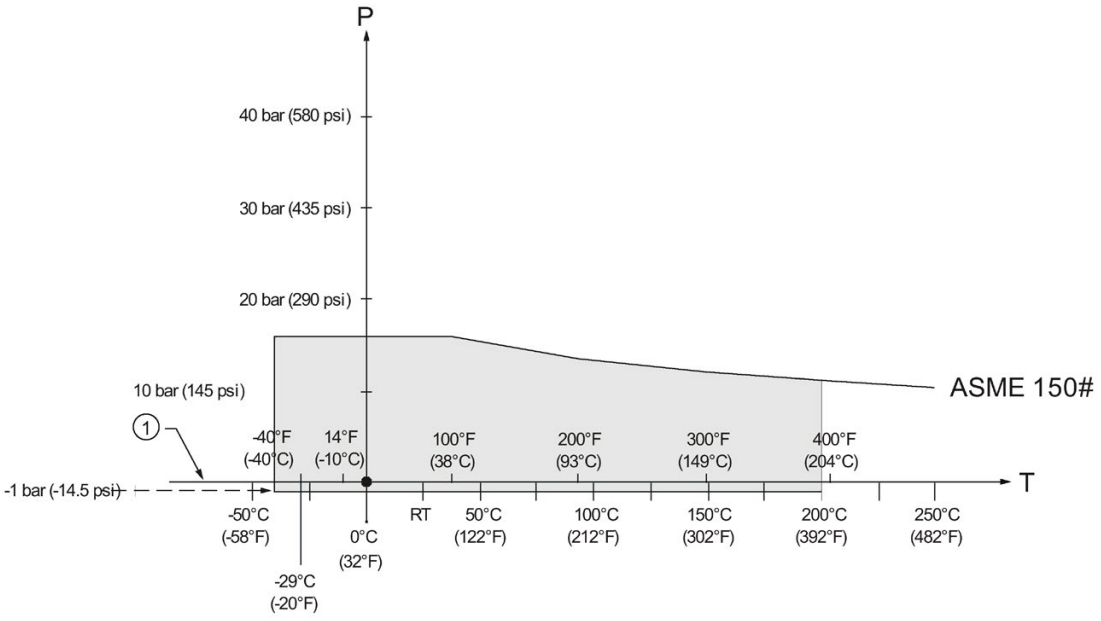

① Atmospheric

P Allowable operating pressures

T Allowable operating temperatures

ASME B16.5, Class 300: 2", 3", and 4" NPS

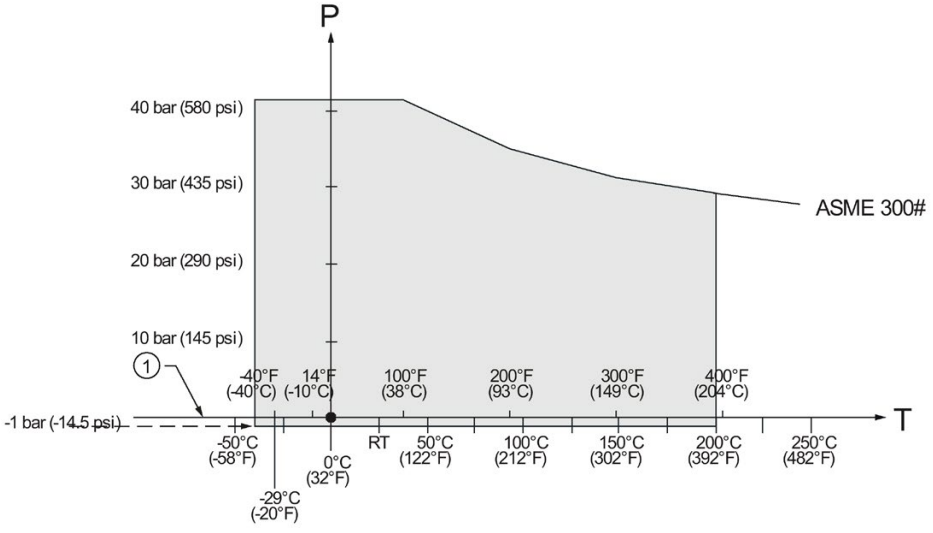

① Atmospheric

P Allowable operating pressures

T Allowable operating temperatures

A.4.4 Flanged encapsulated antenna

ASME B16.5, Class 150: 2", 3", 4", and 6" NPS

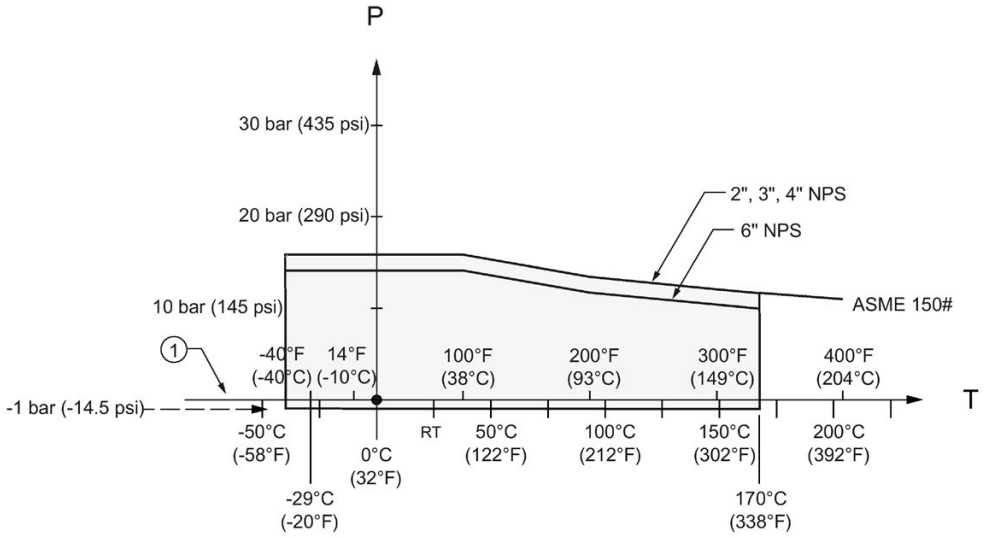

① Atmospheric

P Allowable operating pressures

T Allowable operating temperatures

JIS B 2220, 10K: 50A, 80A, 100A, and 150A

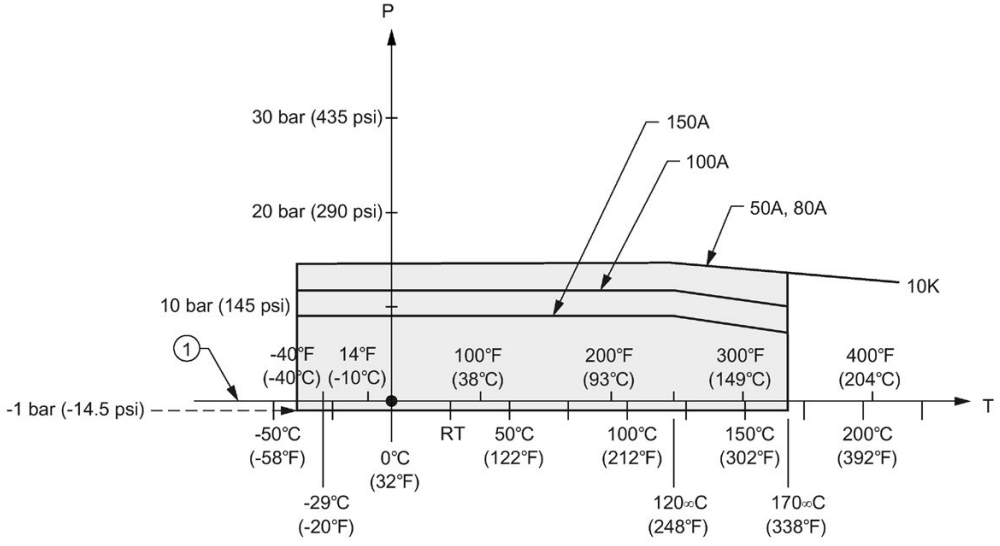

① Atmospheric

P Allowable operating pressures

T Allowable operating temperatures

EN1092-1, PN10/16: DN50, DN80, DN100, and DN150

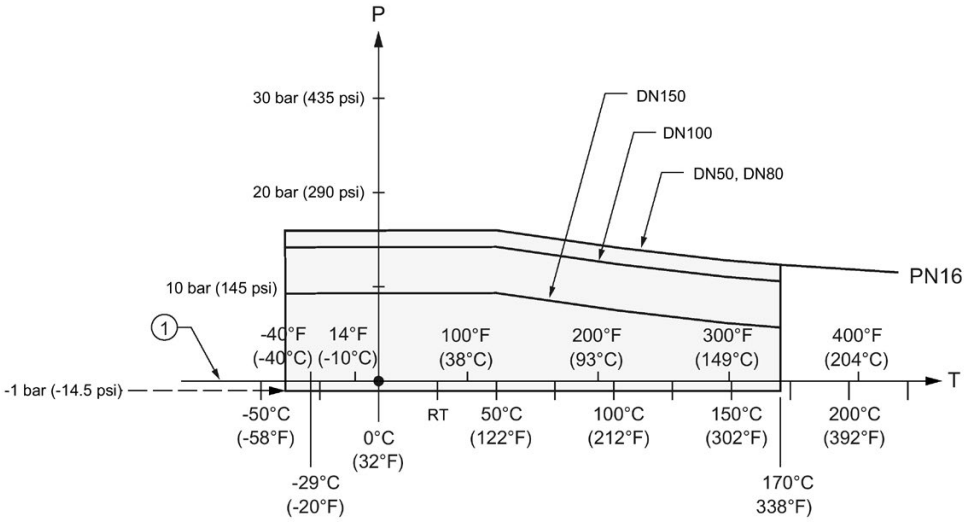

① Atmospheric
P Allowable operating pressures
T Allowable operating temperatures

A.4.5 PVDF antenna

ASME B1.20.1 2" NPT, EN ISO 228-1 2" G (BSPP), EN 10226-1 2" R (BSPT)

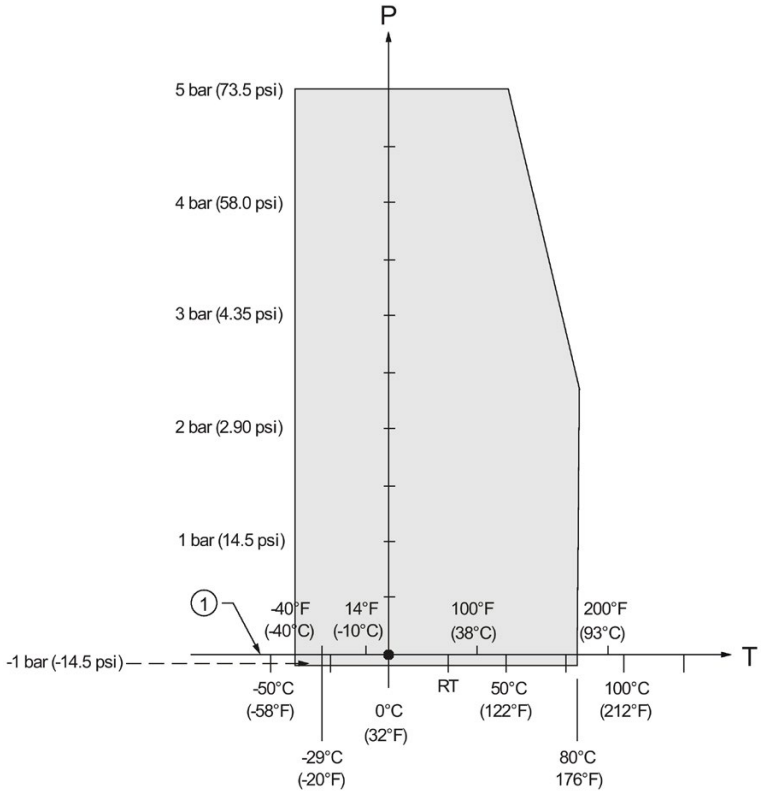

① Atmospheric

P Allowable operating pressures

T Allowable operating temperatures

A.4.6 Hygienic encapsulated antenna

DIN 11851 Sanitary/Hygienic nozzle/slotted nut: DN50, DN80, and DN100

DIN 11864-1 Aseptic/Hygienic nozzle/slotted nut: DN50, DN80, and DN100

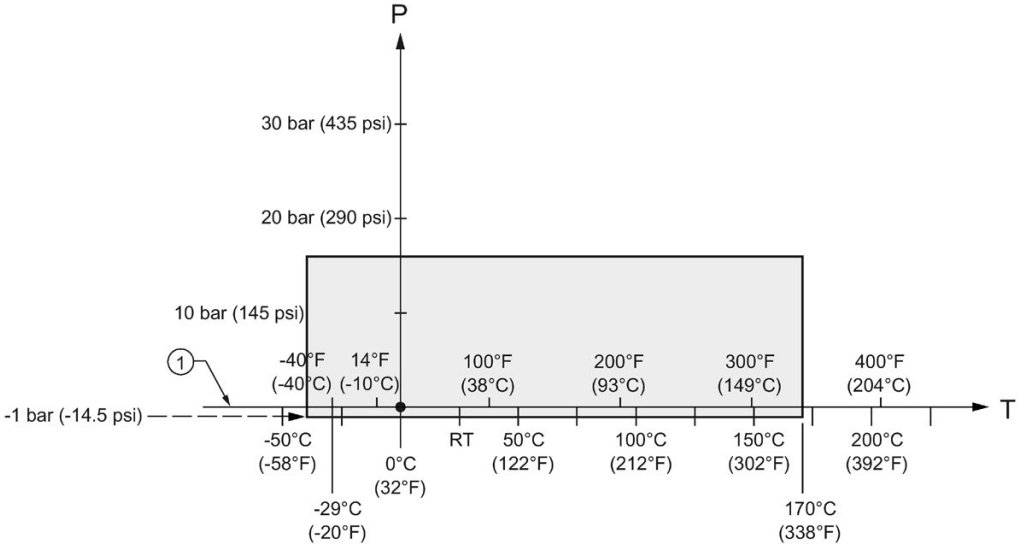

① Atmospheric

P Allowable operating pressures

T Allowable operating temperatures

DIN 11864-2 Aseptic/Hygienic flanged: DN50, DN80, and DN100

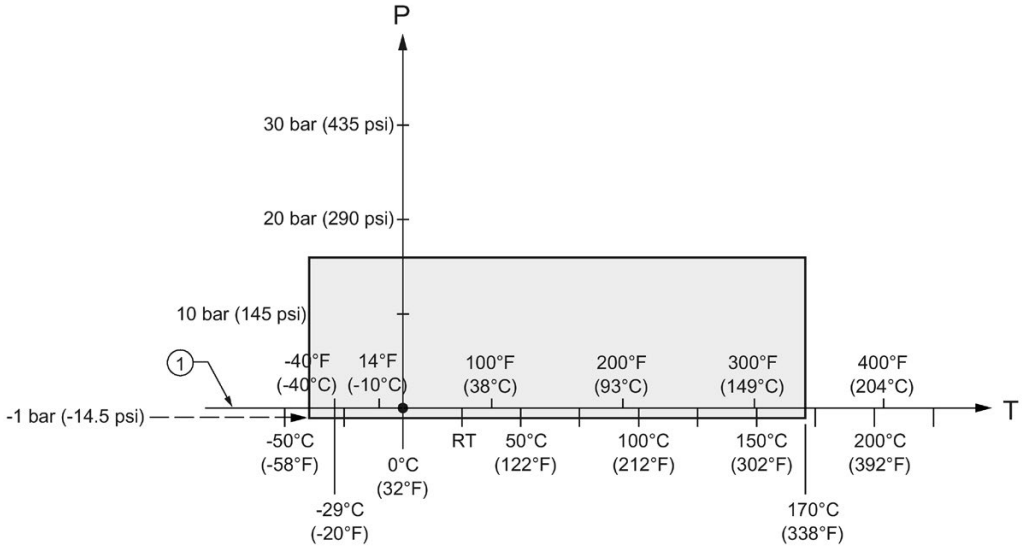

① Atmospheric

P Allowable operating pressures

T Allowable operating temperatures

Note

For pressure applications, all attachment hardware must be suitably rated.

DIN 11864-3 Aseptic/Hygienic clamp: DN50, DN80, and DN100

IS0 2852 Sanitary/Hygienic clamp: 2", 3", and 4"

Tuchenhagen Varivent face seal clamp: Type N (68 mm) and Type F (50 mm)

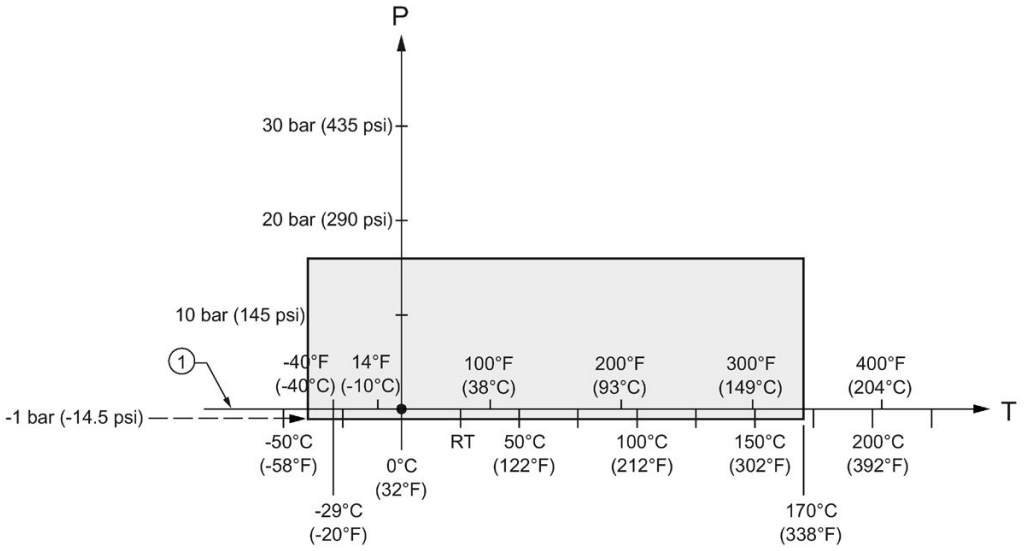

① Atmospheric

P Allowable operating pressures

T Allowable operating temperatures

Note

For pressure applications, all clamps must be rated accordingly.

Appendix B: Communications via Foundation Fieldbus

B

SITRANS LR250 (Foundation Fieldbus) is an FF (H1) device of Class 31PS, and 32L. It supports publish and subscribe functionality as well as Backup LAS functionality. The full range of SITRANS LR250 functions is available only over an FF network.

Foundation Fieldbus (FF) is an open industrial protocol. Full details about FF can be obtained from:
Foundation Fieldbus (http://www.fieldbus.org/)

For details on the use of Foundation Fieldbus protocol with Siemens FF level instruments, see manual *Foundation Fieldbus for Level Instruments* (7ML19985MP01). The manual is available on the CD of Siemens manuals, included in the box with your Siemens level instrument, or for other Siemens level measurement manuals, go to:

Siemens level (http://www.siemens.com/level)

Look under **Level Measurement**.

B.1 Field Communicator 375 (F375)

This device supports Field Communicator 375 (FC375). The FC375 menu structure is very similar to the menu structure for AMS Device Manager [see AMS Menu Structure (Page 69).]

Appendix C: Certificates and support

C

C.1 Technical support

Technical Support

If this documentation does not provide complete answers to any technical questions you may have, contact Technical Support at:

- Support request (http://www.siemens.com/automation/support-request)
- More information about our Technical Support is available at Technical Support (http://www.siemens.com/automation/csi/service)

Internet Service & Support

In addition to our documentation, Siemens provides a comprehensive support solution at:

- Services & Support (http://www.siemens.com/automation/service&support)

Personal contact

If you have additional questions about the device, please contact your Siemens personal contact at:

- Partner (http://www.automation.siemens.com/partner)

To find the personal contact for your product, go to "All Products and Branches" and select "Products & Services > Industrial Automation > Process Instrumentation".

Documentation

You can find documentation on various products and systems at:

- Instructions and manuals (http://www.siemens.com/processinstrumentation/documentation)

C.2 Certificates

You can find certificates on the Internet at Product page (http://www.siemens.com/LR250) or on an included DVD.

List of abbreviations

13

Short form	Long form	Description	Units
3-A	3-A Sanitary Standards, Inc.		
AIFB	Analog Input Function Block		
CE / FM / CSA	Conformité Européene / Factory Mutual / Canadian Standards Association	safety approval	
C_i	Internal capacitance		F
D/A	Dialog to analog		
DCS	Distributed Control System	control room apparatus	
dK	dielectric constant		
EDD	Electronic Device Description		
EHEDG	European Hygienic Engineering Design Group		
FEA	Flanged encapsulated antenna		
FDA	Food and Drug Administration		
HEA	Hygienic encapsulated antenna		
I_i	Input current		mA
I_o	Output current		mA
IS	Intrinsically Safe	safety approval	
L_i	Internal inductance		mH
mH	milliHenry	10^{-3}	H
µF	microFarad	10^{-6}	F
µs	microsecond	10^{-6}	s
PED	Pressure Equipment Directive	safety approval	
pF	pico Farads	10^{-12}	F
ppm	parts per million		
PV	Primary Variable	measured value	
PVDF	Polyvinylidene fluoride		
SELV	Safety extra low voltage		
SV	Secondary Variable	equivalent value	
TB	Transducer Block		
TVT	Time Varying Threshold	sensitivity threshold	
TFM1600 PTFE	Modified PTFE	polytetrafluoroethylene with perfluoropropyl vinyl ether (PPVE) modifier	
U_i	Input voltage		V
U_o	Output voltage		V

LCD menu structure

14

Note

- In Navigation mode, **ARROW keys (◄ ▲ ► ▼)** navigate the menu in the direction of the arrow. See Parameter Reference (Page 125) for detailed information and instructions.

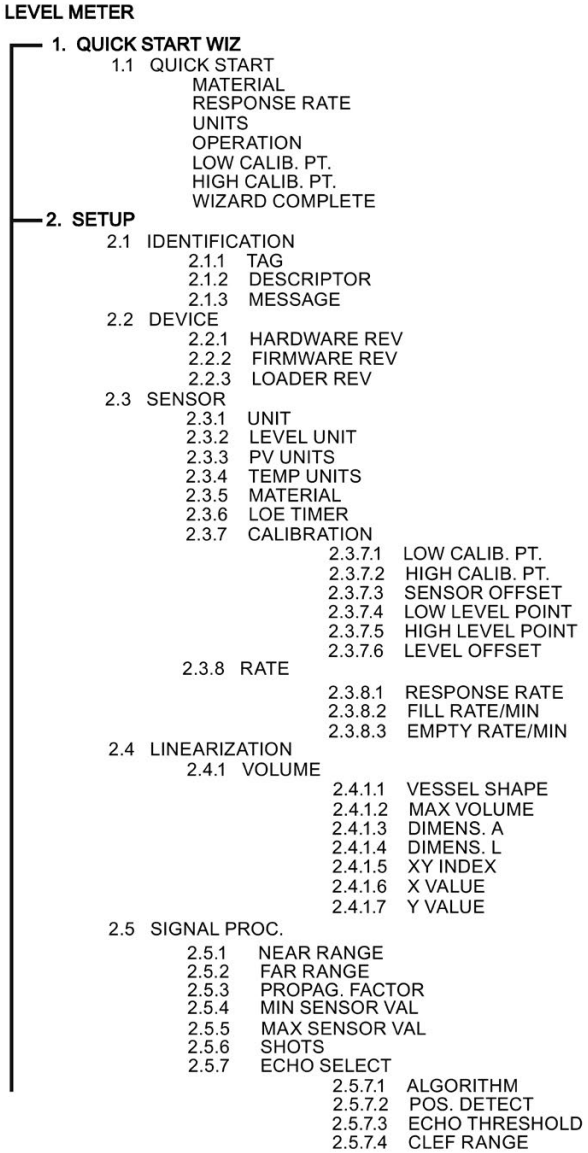

- **2. SETUP (cont'd)**
  - 2.5.8 SAMPLING
    - 2.5.8.1 ECHO LOCK
    - 2.5.8.2 UP SAMP.
    - 2.5.8.3 DOWN SAMP.
  - 2.5.9 ECHO QUALITY
    - 2.5.9.1 CONFIDENCE
    - 2.5.9.2 ECHO STRENGTH
  - 2.5.10 TVT SETUP
    - 2.5.10.1 AUTO ECHO SUPP
    - 2.5.10.2 AUTO SUPP RANGE
    - 2.5.10.3 HOVER LEVEL
    - 2.5.10.4 SHAPER MODE
  - 2.5.11 TVT SHAPER
    - 2.5.11.1 BRKPT. 1-9
    - 2.5.11.2 BRKPT. 10-18
    - 2.5.11.3 BRKPT. 19-27
    - 2.5.11.4 BRKPT. 28-36
    - 2.5.11.5 BRKPT. 37-40
- 2.6 AIFB 1
  - 2.6.1 STATIC REV. NO.
  - 2.6.2 MODE
  - 2.6.3 CHANNEL
  - 2.6.4 INPUT SCALING
    - 2.6.4.1 LOWER VALUE
    - 2.6.4.2 UPPER VALUE
    - 2.6.4.3 UNIT
    - 2.6.4.4 DECIMAL POINT
  - 2.6.5 OUTPUT SCALING
    - 2.6.5.1 LOWER VALUE
    - 2.6.5.2 UPPER VALUE
    - 2.6.5.3 UNIT
    - 2.6.5.4 DECIMAL POINT
  - 2.6.6 ALARMS & WARNI..
    - 2.6.6.1 HI LIMIT ALARM
    - 2.6.6.2 HI LIMIT WARN
    - 2.6.6.3 LO LIMIT WARN
    - 2.6.6.4 LO LIMIT ALARM
    - 2.6.6.5 LIMIT HYSTERESI..
  - 2.6.6 DISPLAY
    - 2.6.7.1 FILTER TIME CONS..
- 2.7 AIFB 2
  - 2.7.1 STATIC REV. NO.
  - 2.7.2 MODE
  - 2.7.3 CHANNEL
  - 2.7.4 INPUT SCALING
    - 2.7.4.1 LOWER VALUE
    - 2.7.4.2 UPPER VALUE
    - 2.7.4.3 UNIT
    - 2.7.4.4 DECIMAL POINT
  - 2.7.5 OUTPUT SCALING
    - 2.7.5.1 LOWER VALUE
    - 2.7.5.2 UPPER VALUE
    - 2.7.5.3 UNIT
    - 2.7.5.4 DECIMAL POINT
  - 2.7.6 ALARMS & WARNI..
    - 2.7.6.1 HI LIMIT ALARM
    - 2.7.6.2 HI LIMIT WARN
    - 2.7.6.3 LO LIMIT WARN
    - 2.7.6.4 LO LIMIT ALARM
    - 2.7.6.5 LIMIT HYSTERESI..
  - 2.7.7 DISPLAY
    - 2.7.7.1 FILTER TIME CONS..
- 2.8 DISPLAY
  - 2.8.1 MAIN OUTPUT
  - 2.8.2 O/P NO LINEAR
  - 2.8.3 O/P NO OFFSETS

- **3. DIAGNOSTICS**
  - 3.1 ECHO PROFILE
  - 3.2 FAULT RESET
  - 3.2 ELECT. TEMP.
    - 3.3.1 MIN. VALUE
    - 3.3.2 MAX. VALUE
  - 3.4 PEAK VALUES
    - 3.4.1 MIN MEAS. VALUE
    - 3.4.2 MAX MEAS. VALUE
- **4. SERVICE**
  - 4.1 MASTER RESET
  - 4.2 REMAIN. DEV. LIFE
    - 4.2.1 LIFETIME EXPECT..
    - 4.2.2 TIME IN OPER..
    - 4.2.3 REMAIN. LIFETIM..
    - 4.2.4 REMINDER ACTIV.
    - 4.2.5 REMIND. 1 (REQ.)
    - 4.2.6 REMIND. 2 (DEM.)
    - 4.2.7 MAINT STAT
    - 4.2.8 ACK STATUS
    - 4.2.9 ACK
  - 4.3 REMAIN. SENS. LIFE
    - 4.3.1 LIFETIME EXPECT..
    - 4.3.2 TIME IN OPER.
    - 4.3.3 REMAIN. LIFETIM..
    - 4.3.4 REMINDER ACTIV.
    - 4.3.5 REMIND. 1 (REQ.)
    - 4.3.6 REMIND. 2 (DEM.)
    - 4.3.7 MAINT STAT
    - 4.3.8 ACK STATUS
    - 4.3.9 ACK
  - 4.4 SERVICE SCHED.
    - 4.4.1 SERV. INTERVAL
    - 4.4.2 TIME LAST SERV.
    - 4.4.3 TIME NEXT SERVI..
    - 4.4.4 REMINDER ACTIV.
    - 4.4.5 REMIND. 1 (REQ.)
    - 4.4.6 REMIND. 2 (DEM.)
    - 4.4.7 MAINT STAT
    - 4.4.8 ACK STATUS
    - 4.4.9 ACK
  - 4.5 CALIB SCHED.
    - 4.5.1 CALIB. INTERNAL
    - 4.5.2 TIME LAST CALIB.
    - 4.5.3 TIME NEXT CALIB.
    - 4.5.4 REMINDER ACTIV.
    - 4.5.5 REMIND. 1 (REQ.)
    - 4.5.6 REMIND. 2 (DEM.)
    - 4.5.7 MAINT STAT
    - 4.5.8 ACK STATUS
    - 4.5.9 ACK
  - 4.6 MANUF. DATE
  - 4.7 POWERED HOURS
  - 4.8 POWERON RESETS
  - 4.9 LCD FAST MODE
  - 4.10 LCD CONTRAST
  - 4.11 SECONDARY VALUE
  - 4.12 SIMULATE ENABLE
- **5. COMMUNICATION**
  - 5.1 DEVICE ADDRESS
- **6. SECURITY**
  - 6.1 REMOTE ACCESS
    - 6.1.1 ACCESS CONTROL
  - 6.2 LOCAL ACCESS
    - 6.2.1 WRITE PROTECT
    - 6.2.2 PIN TO UNLOCK
- **7. LANGUAGE**

Glossary

accuracy

degree of conformity of a measure to a standard or a true value.

algorithm

a prescribed set of well-defined rules or processes for the solution of a problem in a finite number of steps.

ambient temperature

the temperature of the surrounding air that comes in contact with the enclosure of the device.

antenna

an aerial which sends out and receives a signal in a specific direction. There are four basic types of antenna in radar level measurement, horn, parabolic, rod, and waveguide.

Auto False-Echo Suppression

a technique used to adjust the level of a TVT to avoid the reading of false echoes. (See TVT.)

Auto-False Echo Suppression Range

defines the endpoint of the learned TVT distance. (See TVT.) This is used in conjunction with auto false echo suppression.

beam angle

the angle diametrically subtended by the one-half power limits (-3 dB) of the microwave beam.

blanking

a blind zone extending away from the reference point plus any additional shield length.The device is programmed to ignore this zone.

capacitance

the property of a system of conductors and dielectrics that permits the storage of electricity when potential differences exist between the conductors. Its value is expressed as the ratio of a quantity of electricity to a potential difference, and the unit is a Farad.

confidence

see Echo Confidence.

damping

term applied to the performance of a device to denote the manner in which the measurement settles to its steady indication after a change in the value of the level.

dB (decibel)

a unit used to measure the amplitude of signals.

derating

to decrease a rating suitable for normal conditions according to guidelines specified for different conditions.

dielectric

a nonconductor of direct electric current. Many conductive liquids/electrolytes exhibit dielectric properties; the relative dielectric constant of water is 80.

dielectric constant (dK)

the ability of a dielectric to store electrical potential energy under the influence of an electric field. Also known as Relative Permittivity. An increase in the
dielectric constant is directly proportional to an increase in signal amplitude. The value is usually given relative to a vacuum /dry air: the dielectric constant of air is 1. Many conductive liquids/electrolytes exhibit dielectric properties; the relative dielectric constant of water is 80.

echo

a signal that has been reflected with sufficient magnitude and delay to be perceived in some manner as a signal distinct from that directly transmitted. Echoes are frequently measured in decibels relative to the directly transmitted signal.

Echo Confidence

describes the quality of an echo. Higher values represent higher quality. Echo Threshold defines the minimum value required for an echo to be accepted as valid and evaluated.

Echo Lock Window

a window centered on an echo in order to locate and display the echo’s position and true reading. Echoes outside the window are not immediately processed.

Echo Marker

a marker that points to the processed echo.

Echo Processing

the process by which the radar unit determines echoes.

Echo Profile

a graphical display of a processed echo.

Echo Strength

describes the strength of the selected echo in dB referred to 1 µV rms.

false echo

any echo which is not the echo from the desired target. Generally, false echoes are created by vessel obstructions.

frequency

the number of periods occurring per unit time. Frequency may be stated in cycles per second.

hertz (Hz):

unit of frequency, one cycle per second. 1 Gigahertz (GHz) is equal to 10^9 Hz.

horn antenna

a conical, horn-shaped antenna which focuses microwave signals. The larger the horn diameter, the more focused the radar beam.

inductance

the property of an electric circuit by virtue of which a varying current induces an electromotive force in that circuit or in a neighboring circuit. The unit is a Henry.

multiple echoes

secondary echoes that appear as double, triple, or quadruple echoes in the distance from the target echo.

Near Blanking

see Blanking.

nozzle

a length of pipe mounted onto a vessel that supports the flange.

parameters

in programming, variables that are given constant values for specific purposes or processes.

polarization

the property of a radiated electromagnetic wave describing the time-varying direction and amplitude of the electric field vector.

propagation factor (pf)

where the maximum velocity is 1.0, pf is a value that represents a reduction in propagation velocity as a result of the wave travelling through a pipe or medium.

pulse radar

a radar type that directly measures distance using short microwave pulses. Distance is determined by the return transit time.

radar

radar is an acronym for RAdio Detection And Ranging. A device that radiates electromagnetic waves and utilizes the reflection of such waves from distant objects to determine their existence or position.

range

distance between a transmitter and a target.

range extension

the distance below the zero percent or empty point in a vessel.

relative humidity

the ratio of the actual amount of moisture in the atmosphere to the maximum amount of moisture the atmosphere could hold (which varies depending on the air temperature).

repeatability

the closeness of agreement among repeated measurements of the same variable under the same conditions.

shot

one transmit pulse or measurement.

stilling-well

see stillpipe.

stillpipe

a pipe that is mounted inside a vessel parallel to the vessel wall, and is open to the vessel at the bottom.

TVT (Time Varying Threshold)

a time-varying curve that determines the threshold level above which echoes are determined to be valid.

Index

A

Abbreviations and identifications list, 267
access control
  local access, 163
  remote access, 163
activating LR250, 50
agitator blade detection
  avoiding, 140
AMS Device Manager
  features, 71
antenna
  replacement, 173
antenna types
  flanged encapsulated antenna, 204, 206
  flanged horn antenna, 201
  flanged horn antenna with extension, 203
  threaded horn, 195
  threaded PVDF antenna, 226
Auto False Echo Suppression
  explanation, 245
  setup, 141

B

beam angle
  flanged encapsulated antenna, 204, 206
  flanged horn, 201, 203
  threaded horn, 197, 199
  threaded PVDF antenna, 226
blanking (see Near Range), 246
bolting instructions, 34
bypass pipe
  see stillpipe, 30

C

cables
  requirements, 38
Calibration Interval, 159
Certificates, 265
channel
  transducer block outputs, 145
cleaning
  instructions, 171
CLEF (Constrained Leading Edge Fit)
  explanation, 242
CLEF range
  setup, 139
Compact Operating Instructions, 265
conduits
  requirements, 38
configuration
  new device via AMS, 75
  Quick Start via LUI, 58
Customer Support, (Refer to Technical Support)

D

damping
  Filter Time Constant setup, 149
Damping
  explanation, 247
Device Address, 162
device nameplate
  FM/CSA Class 1 Div. 2, 45
  Intrinsically Safe (ATEX/IECEx), 42
  Intrinsically Safe (FM/CSA), 43
Device Reset
  see Master Reset, 151
Device Status
  icons, 178
Diagnostics
  maintenance settings, 150
dimensions
  flanged encapsulated antenna, 204, 206
  flanged horn, 201, 203
  flat face flange, 233
  raised face flange, 228, 228, 231
  threaded horn with extension, 197, 199
  threaded PVDF antenna, 226
Disassembly, 36
Disposal, 175
Documentation, 265

E

echo confidence
  parameter setup, 141
echo processing
  Process Intelligence, 240

Echo Profile
view via LUI, 61
echo selection
Algorithm, 241
CLEF (Constrained Leading Edge Fit), 242
Position algorithm, 241
time varying threshold (TVT), 240
edit mode
handheld programmer, 54
key functions, 57
Empty rate
setup, 131
enable/disable remote operation, 163
enclosure
opening, 38

F

factory defaults
Master Reset, 151
false echo
see Auto False Echo Suppression, 245
Far Range
explanation, 247
setup, 136
fault codes
general fault codes, 179
Fill Rate
setup, 131
Filter Time Constant
explanation, 247
flange
bolting instructions, 34
flange markings
flat face, 233
raised face, 229, 231
flange sizes
flat face, 233
raised face, 228, 228, 231
flanged encapsulated antenna
dimensions, 206
flanged horn
dimensions, 201, 203

H

handheld programmer
edit mode, 55
navigation, 55
Hazardous area
Qualified personnel, 16
hazardous area installations
instructions, 46
wiring requirements, 40
Hotlline, (Refer to Support request)
hysteresis
setup, 149

I

Identifications and abbreviations
list, 267
installation
hazardous area requirements, 40
requirements, 31
warnings and notes, 31
Instuctions and manuals, 265
internal temperature
monitoring, 248

K

key functions
edit mode, 57
navigation mode, 55

L

Language, 164
LCD display
contrast adjustment, 161
echo profile viewing, 61
fast mode, 161
measurement mode, 51
lens
replacement, 173
lid-lock set screw, 38
Limit Hysteresis
setup, 149
Lithium batteries
Safety, 49
Local User Interface (LUI), 51
LOE Timer
explanation, 248
setup, 128
loop voltage vs. loop resistance
power supply requirements, 42
loss of echo (LOE)
explanation, 247
Loss of Echo (LOE)
explanation, 248

LUI (Local User Interface)
contrast adjustment, 51

M

maintenance
repairs, 171
replacing antenna, 173
replacing lens, 173
Maintenance, 172
maintenance settings
Calibration Interval, 159
see Diagnostics, 150
see Remaining Sensor Lifetime, 155
Service Interval, 157
Manuals, 265
Master Reset
factory defaults, 151
measurement range
blanking via Near Range, 246
extension via Far Range, 247
Measurement Response
explanation, 244
Modifications
correct usage, 16
improper, 16
mounting
bypass requirements, 30
handheld programmer access, 29
housing construction, 24, 29
nozzle design, 26
nozzle location, 27
on vessel with obstructions, 29
sunshield recommended, 29

N

nameplate
Intrinsically Safe (ATEX/IECEx), 42
Intrinsically Safe (FM/CSA), 43
Near Range
explanation, 246
setup, 136

O

Operating Instructions, 265
operating principles
cleaning, 239
Output limits
setup, 148
Output Scale
setup, 147
overview, 19

P

password protection
via AMS, 112
PED (Pressure Equipment Directive), 23, 250
performance
specifications, 187
pipe sizes, 228
flange mounting, 228, 231
polarization reference point, 29
power source
requirements, 37
power supply requirements
loop voltage vs. loop resistance, 42
pressure applications, 23
Pressure Equipment Directive, 23, 250
Process Intelligence, 240
process temperature
maximum, 248
programmer
handheld, 52
programming
via the handheld programmer, 53
propogation factor
values, 136

Q

Qualified personnel, 16
Quick Start Wizard
via LUI, 58

R

raised face flange markings, 227, 230
reading erratic
troubleshooting, 184
reading incorrect
troubleshooting, 185
reading response slow, 185
Remote Lockout, 163
repair
cautions, 173
excluded liability, 173
reset
see Master Reset, 151

Response Rate
explanation, 244
setup, 130
Return procedure, 175

S

safety notes, 13
Scope of delivery, 10
security
local access unlock value, 164
password protection via AMS, 112
sensor reference point
flanged encapsulated antenna, 204, 206
flanged horn, 201, 203
flat faced flange, 233
raised face flange, 227, 230
threaded horn, 197, 199
threaded PVDF horn, 226
Service, 265
Service & Support, 265
Internet, 265
sidepipe
see bypass pipe, 30
SITRANS LR250
operating principles, 239
startup
transition screen, 50
stillpipe
mounting requirements, 30, 30
Support, 265
Support request, 265

T

technical data
ambient temperature, 191
antenna, 190
enclosure, 190
environmental, 191
performance, 187
power, 187
pressure, 192
process connections, 189
process temperature, 192
weight, 190
Technical data, 187
Technical support
Partner, 265
Technical Support, 265
Personal contact, 265
threaded connection markings, 226
threaded horn antenna
dimensions, 197, 199
threaded PVDF antenna
dimensions, 226
transducer block outputs
channel, 145
troubleshooting
communication, 177
operation, 184
TVT (time varying threshold)
explanation, 240

V

vessel shape
selection, 132

W

Warranty, 11
wiring
cables, 38
hazardous areas, 40
Write Protection, 163

For more information

Level measurement:
www.siemens.com/level

Weighing and batching systems:
www.siemens.com/weighing

Siemens AG
Process Industries and Drives
Process Automation
76181 Karlsruhe
Germany

© Siemens AG 2018
Subject to change without prior notice
Printed in Canada
A5E32221411-AF