© Siemens AG 2016

2/2 Introduction

2/4 Transponders (ISO mode)
2/4 Introduction
2/8 MDS D165
2/8 MDS D261
2/10 MDS D100
2/12 MDS D200
2/14 MDS D400
2/16 MDS D421
2/18 MDS D521
2/20 MDS D422
2/22 MDS D522
2/24 MDS D423
2/26 MDS D124
2/28 MDS D324
2/30 MDS D424
2/32 MDS D524
2/34 MDS D425
2/36 MDS D525
2/38 MDS D126
2/40 MDS D426
2/42 MDS D526
2/44 MDS D117
2/46 MDS D127
2/48 MDS D428
2/50 MDS D528
2/52 MDS D139
2/54 MDS D339
2/56 MDS D160
2/58 MDS D460

2/60 Transponders (RF300 mode)
2/60 Introduction
2/61 RF320T
2/63 RF330T
2/65 RF340T
2/67 RF350T
2/69 RF360T
2/71 RF370T
2/73 RF380T

2/76 RF200
2/78 RF200 readers
2/79 RF210R
2/82 RF210M mobile handheld terminal
2/83 RF220R
2/86 RF240R
2/90 RF250R
2/95 RF260R
2/99 RF290R
2/117 RF350M mobile handheld terminal

2/102 RF300
2/104 RF300 readers
2/105 RF310R
2/107 RF340R
2/109 RF350R
2/112 RF380R
2/115 RF382R
2/117 RF350M mobile handheld terminal

2/120 MOBY D
2/122 MOBY D readers
2/123 SLG D11 / SLG D11S basic units
2/126 SLG D12 / SLG D12S
2/129 MOBY D Configuring instructions

2/130 HF antennas
2/130 Introduction
2/131 ANT 1 for RF350R
2/132 ANT 3 for RF250R, RF350R and RF350M
2/133 ANT 3S for RF250R, RF350R and RF350M
2/134 ANT 8 for RF250R and RF350M
2/136 ANT 12 for RF250R, RF350R and RF350M
2/137 ANT 18 for RF250R, RF350R and RF350M
2/138 ANT 30 for RF250R, RF350R and RF350M
2/139 ANT D1 for RF290R
2/140 ANT D2 for SLG D11 / SLG D11S
2/141 ANT D5 for RF290R and SLG D11 / D11S
2/143 ANT D6 for RF290R
2/145 ANT D10 for RF290R

© Siemens AG 2016

Overview

As the world's leading supplier of identification systems, with SIMATIC Ident Siemens offers a unique integrated and scalable range of RFID and optical identification systems for flexible and cost-effective identification solutions.

RFID systems are offered for the most diverse requirements on performance, range, frequency range as well as HF and UHF. This section provides you an overview of our RFID systems in the HF range.

Easy integration of the RFID systems via communication modules and pre-configured software blocks in the world of Totally Integrated Automation (TIA) significantly reduces the work and costs necessary for commissioning, diagnostics and maintenance. Thanks to many years of experience in the area of RFID, Siemens is a competent partner for implementation of the most diverse solutions in all sectors, but especially in the areas of production and logistics.

RFID systems for the HF frequency range

Siemens offers the following two RFID systems for the HF range:

- SIMATIC RF200:
  The compact and economical RFID system according to ISO 15693. Readers with an IO-Link interface are provided for particularly simple and open identification solutions.
- SIMATIC RF300:
  For the most demanding requirements in terms of speed, data volume and diagnostics functionality, the RF300 mode with separate transponders is available. The high-performance RFID system can be operated with ISO 15693 transponders to meet average performance requirements.

Meaningful data from the outset

The RFID systems ensure that meaningful data accompanies a product or object from the very beginning. The transponders are attached to the product, product carrier, object or its transport or packing unit and are recorded, read and written by non-contact methods. This means that all the application-specific data is located on the transponder. This is true whether you are dealing with vehicle body parts in the automotive industry or order picking boxes. Up to 64 KB of data can be stored and individually read and supplemented when required at the various workstations or manufacturing stations. This all means that the flow of material and data is synchronized optimally.

Contactless data transfer and a high degree of industrial compatibility

Powerful readers (write/read devices) in various rugged designs ensure fast and reliable data transfer between the transponders and the higher-level systems (e.g. PLC, PC).

The data and power are transmitted inductively by an electromagnetic alternating field. This principle of contactless data transfer also works in the presence of contamination or through numerous non-metallic materials.

Perfectly matched components

The RFID systems consist of perfectly matched individual components:

- Transponder
- Readers
- Antennas
- Communication modules for connection to the automation system (e.g. PROFIBUS, PROFINET)
- Software for system integration

For a wide range of applications in all sectors

- Production control
- Asset management
- Tracking & tracing

Wide range of transponders

A wide range of different transponders is available using a variety of storage technologies and geometric designs. Their strength is not only their high level of data security but also the excellent high degree of protection against ambient conditions such as contamination, temperature fluctuations, washing water or shock load.

Benefits

get Designed for Industry

- Flexible and economic solutions thanks to the complete and scalable portfolio for the field of industrial identification.
- Simplified engineering, commissioning, diagnostics and maintenance through seamless integration into Totally Integrated Automation:
  - Integrated bus connection to an automation system, such as SIMATIC, SIMOTION or SINUMERIK via communication modules with PROFIBUS and PROFINET.
  - Simple S7 software integration via ready-to-use function blocks.
  - Extensive status and diagnostic functions.
- High degree of investment protection thanks to:
  - Open standards (e.g. ISO 15693).
  - Software compatibility between the RFID and optical reading systems of Siemens.
  - Standardized communication interfaces.
- Openness through connection possibilities to different bus systems from different manufacturers and PC environments via communication modules.
- Worldwide Service and Support.

© Siemens AG 2016

Integration

A wide range of communication modules, function blocks, as well as high-performance drivers and function libraries permits easy and quick integration into the application. And best of all: SIMATIC RF is part of Totally Integrated Automation (TIA) and can be integrated easily and cost-effectively into the SIMATIC world. For more details on the connection possibilities, see the section "Communication Modules".

SIMATIC Ident Configuration Guide

Here is a compact configuration tool for setting up RFID systems:

http://support.automation.siemens.com/WW/view/en/67384964

© Siemens AG 2016

2

Overview

The following transponders can be used with the SIMATIC RF200, RF300 or MOBY D RFID systems:

Transponder	Features	Page
MDS D165	SmartLabel, (PET) similar to credit card format. Applications range from simple identification such as electronic barcode substitution or supplementation, to storage and distribution logistics, right up to product identification.. Usable for RFID systems: • RF200 • RF300 • MOBY D	2/8
MDS D261	SmartLabel, (PET) in compact design. Applications range from simple identification such as electronic barcode substitution or supplementation, to storage and distribution logistics, right up to product identification. Usable for RFID systems: • RF200 • RF300 • MOBY D	2/8
MDS D100	Universal transponder in credit card format with 112 bytes EEPROM, suitable for the identification of transport units in production-related logistics. Usable for RFID systems: • RF200 • RF300 • MOBY D	2/10
MDS D200	Universal transponder in credit card format with 256 bytes EEPROM, suitable for the identification of transport units in production-related logistics. Usable for RFID systems: • RF200 • RF300 • MOBY D	2/12
MDS D400	Universal transponder in credit card format with 2 000 bytes FRAM, suitable for the identification of transport units in production-related logistics. Usable for RFID systems: • RF200 • RF300 • MOBY D	2/14

Transponder	Features	Page
MDS D421	Transponder for the tool coding according to DIN 69873. It can be used wherever very small data media and exact positioning are required (e.g. for tool identification). Usable for RFID systems: • RF200 • RF300 • MOBY D	2/16
MDS D521	The MDS D521 is designed for tool coding according to DIN 69873. Usable for RFID systems: • RF200	2/18
MDS D422	Transponder for the identification of metallic workpiece holders, workpieces or containers. Usable for RFID systems: • RF200 • RF300	2/20
MDS D522	Transponder for the identification of metallic workpiece holders, workpieces or containers. Usable for RFID systems: • RF200	2/22
MDS D423	Rugged transponder for use in production and distribution logistics as well as in assembly and production lines. Usable for RFID systems: • RF200 • RF300	2/24

© Siemens AG 2016

Transponder	Features	Page
MDS D124	Heat-resistant transponder for use in applications with high thermal stress. Usable for RFID systems: • RF200 • RF300 • MOBY D	2/26
MDS D324	Rugged transponder for use in harsh industrial environments and under extreme environmental conditions. Usable for RFID systems: • RF200 • RF300 • MOBY D	2/28
MDS D424	Rugged transponder for use in production and distribution logistics as well as in assembly and production lines. Usable for RFID systems: • RF200 • RF300 • MOBY D	2/30
MDS D524	The transponder is designed for use in production and distribution logistics as well as in assembly and production lines. Usable for RFID systems: • RF200	2/32
MDS D425	Compact and rugged transponder suitable for screw mounting. For use in assembly and production lines in the powertrain sector. Usable for RFID systems: • RF200 • RF300	2/34
MDS D525 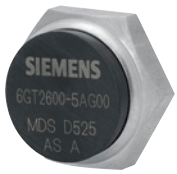	It is designed for use in assembly and production lines as well as in the powertrain sector. Usable for RFID systems: • RF200	2/36
MDS D126	Compact and rugged transponder for identification of transport units in production-related logistics. The transponder can also be used in harsh environments. Usable for RFID systems: • RF200 • RF300 • MOBY D	2/38
MDS D426	Compact and rugged transponder for identification of transport units in production-related logistics. The transponder can also be used in harsh environments. Usable for RFID systems: • RF200 • RF300 • MOBY D	2/40
MDS D526	It is designed for the identification of transport units in production-related logistics. Usable for RFID systems: • RF200	2/42
MDS D117	Extremely small, ISO-15693-compatible transponder that can be flush-mounted on metal with adhesive. Transponder for direct identification of metallic workpiece holders, small workpieces, or containers. Usable for RFID systems: • RF200 • RF300	2/44

© Siemens AG 2016

Introduction

Transponder	Features	Page
MDS D127	Extremely small, ISO 15693-compatible transponder that can be screwed flush into metal. Transponder for direct identification of metallic workpiece holders, small workpieces, or containers Usable for RFID systems: • RF200 • RF300	2/46
MDS D428	Compact and rugged transponder for screw mounting; for use in assembly and production lines in the powertrain area. Usable for RFID systems: • RF200 • RF300 • MOBY D	2/48
MDS D528	It is designed for use in assembly and production lines as well as in the powertrain sector. Usable for RFID systems: • RF200	2/50
MDS D139	Heat-resistant transponder for use in paint shops or applications with high thermal stress. Usable for RFID systems: • RF200 • RF300 • MOBY D	2/52
MDS D339	Heat-resistant transponder for use in paint shops or applications with high thermal stress.. Usable for RFID systems: • RF200 • RF300 • MOBY D	2/54

Transponder	Features	Page
MDS D160	Special transponder for harsh environments in the laundry and cleaning industry. Usable for RFID systems: • RF200 • RF300 • MOBY D	2/56
MDS D460	Rugged transponder for use in assembly lines. Usable for RFID systems: • RF200 • RF300 • MOBY D	2/58

Customer-specific transponders

Customer-specific transponders (packaging, temperature range, geometry, etc.) on request.

© Siemens AG 2016

Benefits

get Designed for Industry

The comprehensive portfolio of ISO 15693 transponders offers the right solution for every requirement in production and production logistics:

- Large memory of up to 8 192 bytes (FRAM)
- Low-cost transponders can, if necessary, be mounted on metal with a spacer.
- Extremely rugged transponder for high temperature ranges up to 220 °C with ATEX approval for use in paint shops.
- Extremely small transponder for exact positioning, e.g. for tool identification.
- Screw-fit transponders for automatic attachment by means of robots.
- Screw-fit transponders for flush-mounting in metal for identifying workpieces or workpiece holders.
- Customized solutions for SmartLabels and transponders on request.

Technical specifications

Field data (operating/limit distance) of transponders and readers (all specifications in mm)

The the field data (unaffected by metal) for all ISO transponders (MDS Dxxx) in connection with RF200 readers is listed in the technical specifications of the RFID overview. The listed technical data are typical values and are valid for a room temperature of +25 °C.

© Siemens AG 2016

2

Overview

The SmartLabels MDS D165 and MDS D261 can be used for the RFID system MOBY D as well as for SIMATIC RF200 and SIMATIC RF300 (ISO mode).

SmartLabels permit numerous flexible constructions to ensure optimum dimensioning for many different applications.

Thanks to their very reasonable price, the SmartLabels can be used universally as "electronic barcode substitutes or supplements" or "delivery notes".

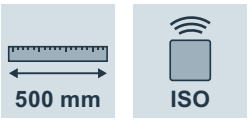

6GT2600-1AB00-0AX0[1)]

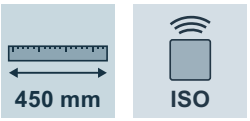

6GT2600-1AA01-0AX0

Technical specifications

Article number	**6GT2600-1AB00-0AX0**	**6GT2600-1AA01-0AX0**
Product type designation	MDS D165 SmartLabel	MDS D261 SmartLabel
Suitability for operation	RF200, RF300, MOBY D	RF200, RF300, MOBY D
Wireless frequencies		
Operating frequency Rated value	13.56 MHz	13.56 MHz
Electrical data		
Range maximum	500 mm	450 mm
	range is reader dependent: observe http://support.automation.siemens.com/WW/view/en/67384964	
Protocol with radio transmission	ISO 15693	ISO 15693
Transfer rate with radio transmission maximum	26.5 kbit/s	26.5 kbit/s
Product feature multitag-capable	Yes	Yes
Product component Backup battery	No	No
Memory		
Type of memory	EEPROM	EEPROM
Storage capacity of the user memory	112 byte	256 byte
Type of memory organization	UID (fixed code) 8 bytes, user memory 112 bytes, configuration memory 8 bytes	UID (fixed code) 8 bytes, user memory 256 bytes, configuration memory 8 bytes
Number of read cycles at ambient temperature < 40 °C maximum	100 000 000 000 000	100 000 000 000 000
Number of write cycles at ambient temperature < 40 °C maximum	1 000 000	1 000 000
Data retention time at ambient temperature < 40 °C not less than	10 y	10 y
Property of memory	Block-by-block write protection of the user memory	Block-by-block write protection of the user memory
Type of transponder chip used	NXP I-Code SLI	STM LRI2K
Mechanical data		
Material	Top side + inlay: PET, antenna aluminum	Top side + inlay: PET, antenna aluminum
Color	white	white
Mounting distance relating to metal surfaces recommended minimum	25 mm	25 mm

[1)] Explanation of symbols: See page 1/8.

© Siemens AG 2016

Article number	**6GT2600-1AB00-0AX0**	**6GT2600-1AA01-0AX0**
Product type designation	MDS D165 SmartLabel	MDS D261 SmartLabel
Suitability for operation	RF200, RF300, MOBY D	RF200, RF300, MOBY D
Permitted ambient conditions		
Ambient temperature		
• during read/write access	-25 ... +85 °C	-25 ... +85 °C
• outside the read/write area	-25 ... +85 °C	-25 ... +85 °C
• during storage	20 ... 30 °C	20 ... 30 °C
Protection class IP	IP65	IP65
Resistance to mechanical stress	Maximum storage period: 2 years (determined by durability of the adhesive)	Maximum storage period: 2 years (determined by durability of the adhesive)
Design, dimensions and weight		
Width	54 mm	55 mm
Height	0.3 mm	0.3 mm
Depth	86 mm	55 mm
Net weight	1 g	1 g
Mounting type	one-side adhesible	one-side adhesible
Product properties, functions, components general		
Product feature		
• printable	Yes	Yes
Printing process	Thermal transfer process	Thermal transfer process

Selection and ordering data

	Article No.
MDS D165 SmartLabel 112 bytes EEPROM Ordering quantity 1 000 units or a multiple thereof.	**6GT2600-1AB00-0AX0**
MDS D261 SmartLabel 256 bytes EEPROM Ordering quantity 1 000 units or a multiple thereof.	**6GT2600-1AA01-0AX0**

© Siemens AG 2016

Overview

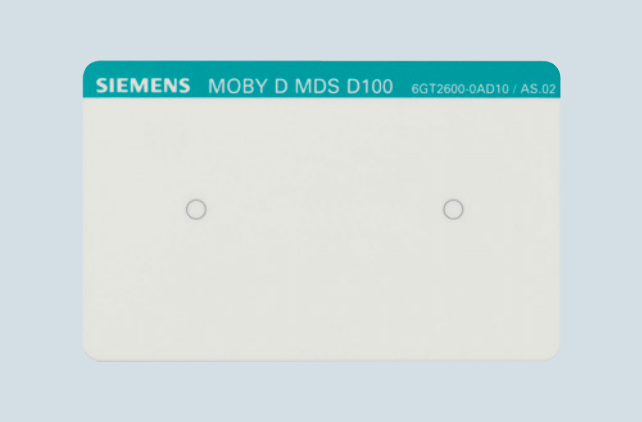

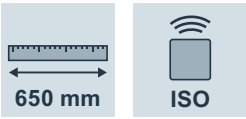

The transponder in credit card format can be used for the RFID system MOBY D as well as for SIMATIC RF200 and SIMATIC RF300 (ISO mode).

Application

Applications range from simple identification such as electronic bar code substitution or supplementation, to storage and distribution logistics, up to product identification.

This transponder can even be used problem-free under extreme environmental conditions (e.g. when subjected to temperatures up to +80 °C).

Technical specifications

Article number	**6GT2600-0AD10**
Product type designation	MDS D100 transponder
Suitability for operation	RF200, RF300, MOBY D
Wireless frequencies	
Operating frequency Rated value	13.56 MHz
Electrical data	
Range maximum	650 mm; range is reader dependent: observe
http://support.automation.siemens.com/WW/view/en/67384964	
Protocol with radio transmission	ISO 15693
Transfer rate with radio transmission maximum	26.5 kbit/s
Product feature multitag-capable	Yes
Product component Backup battery	No
Memory	
Type of memory	EEPROM
Storage capacity of the user memory	112 byte
Type of memory organization	UID (fixed code) 8 bytes, user memory 112 bytes, configuration memory 8 bytes
Number of read cycles at ambient temperature < 40 °C maximum	100 000 000 000 000
Number of write cycles at ambient temperature < 40 °C maximum	1 000 000
Data retention time at ambient temperature < 40 °C not less than	10 y
Property of memory	Block-by-block write protection of the user memory
Type of transponder chip used	NXP I-Code SLI
Mechanical data	
Material	PC laminated plastic
Color	white / petrol
Mounting distance relating to metal surfaces recommended minimum	20 mm
Permitted ambient conditions	
Ambient temperature	
• during read/write access	-25 ... +80 °C
• outside the read/write area	-25 ... +80 °C
• during storage	-25 ... +80 °C
Protection class IP	IP68
Shock resistance	According to DIN EN 60721-3-7 Class 7 M3
Resistance to mechanical stress	Shock and vibration according to ISO 10373 / ISO 7810, torsion and twisting according to ISO 10373 / ISO 7816-3
Design, dimensions and weight	
Width	54 mm
Height	0.9 mm
Depth	85.6 mm
Net weight	5 g
Mounting type	Gluing, mounting bag (see accessories)
Product properties, functions, components general	
Product feature	
• printable	Yes
Printing process	Printable on both sides
Standards, specifications, approvals	
MTBF	228 y
Accessories	
Accessories	Fixing strap, holder, spacer

© Siemens AG 2016

Selection and ordering data

	Article No.
MDS D100 transponder 112 bytes EEPROM Ordering quantity 50 units or a multiple thereof.	**6GT2600-0AD10**
Accessories	
Fixing pocket For MDS D100, usable together with spacer 6GT2190-0AA00. Ordering quantity 50 units or a multiple thereof. 	**6GT2190-0AB00**
Spacer For fixing pocket (6GT2190-0AB00), thickness 20 mm The purpose of the spacer is to maintain the recommended distance to the metal when installing the transponder. Ordering quantity 50 units or a multiple thereof. 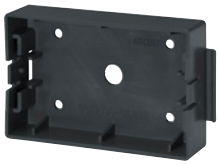	**6GT2190-0AA00**
Holder For MDS D100. Ordering quantity 50 units or a multiple thereof. 	**6GT2390-0AA00**

Dimensional drawings

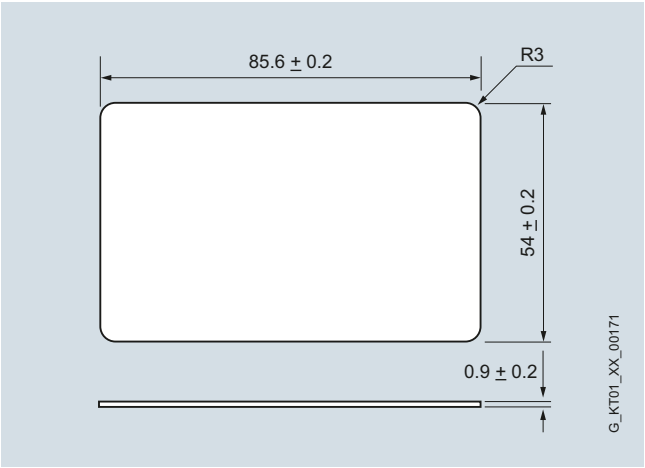

MDS D100 transponder

© Siemens AG 2016

2

Overview

The MDS D200 is a mobile, passive, maintenance-free transponder based on ISO 15693.

The MDS D200 can be used for the RFID system MOBY D as well as for SIMATIC RF200 and SIMATIC RF300 (ISO mode).

Application

From simple identification, e.g. as electronic barcode replacement or supplementation, through warehouse and distribution logistics, up to product identification.

Technical specifications

Article number	**6GT2600-1AD00-0AX0**
Product type designation	MDS D200 transponder
Suitability for operation	RF200, RF300, MOBY D
Wireless frequencies	
Operating frequency Rated value	13.56 MHz
Electrical data	
Range maximum	600 mm; range is reader dependent: observe
http://support.automation.siemens.com/WW/view/en/67384964	
Protocol with radio transmission	ISO 15693
Transfer rate with radio transmission maximum	26.5 kbit/s
Product feature multitag-capable	Yes
Product component Backup battery	No

Article number	**6GT2600-1AD00-0AX0**
Product type designation	MDS D200 transponder
Suitability for operation	RF200, RF300, MOBY D
Memory	
Type of memory	EEPROM
Storage capacity of the user memory	256 byte
Type of memory organization	UID (fixed code) 8 bytes, u ser memory 256 bytes, configuration memory 8 bytes
Number of read cycles at ambient temperature < 40 °C maximum	100 000 000 000 000
Number of write cycles at ambient temperature < 40 °C maximum	1 000 000
Data retention time at ambient temperature < 40 °C not less than	10 y
Property of memory	Block-by-block write protection of the user memory
Type of transponder chip used	TI Tag-it HFI
Mechanical data	
Material	PVC laminated plastic
Color	white
Mounting distance relating to metal surfaces recommended minimum	25 mm
Permitted ambient conditions	
Ambient temperature	
• during read/write access	-20 ... +60 °C
• outside the read/write area	-20 ... +60 °C
• during storage	-20 ... +60 °C
Protection class IP	IP67
Shock resistance	According to DIN EN 60721-3-7 Class 7 M3
Resistance to mechanical stress	Shock and vibration according to ISO 10373 / ISO 7810, torsion and twisting according to ISO 10373 / ISO 7816-3
Design, dimensions and weight	
Width	54 mm
Height	0.8 mm
Depth	85 mm
Net weight	5 g
Mounting type	Gluing, mounting bag (see accessories)
Product properties, functions, components general	
Product feature	
• printable	Yes
Printing process	Printable on both sides
Standards, specifications, approvals	
MTBF	228 y
Accessories	
Accessories	Fixing strap, holder, spacer

© Siemens AG 2016

Selection and ordering data

	Article No.
MDS D200 transponder 256 bytes EEPROM Ordering quantity 250 units or a multiple thereof.	**6GT2600-1AD00-0AX0**
Accessories	
Fixing pocket For MDS D200, usable together with spacer 6GT2190-0AA00. Ordering quantity 50 units or a multiple thereof. 	**6GT2190-0AB00**
Spacer For fixing pocket (6GT2190-0AB00), thickness 20 mm The purpose of the spacer is to maintain the recommended distance to the metal when installing the transponder. Ordering quantity 50 units or a multiple thereof. 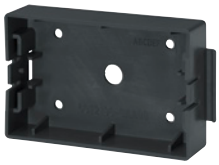	**6GT2190-0AA00**
Holder For MDS D200. Ordering quantity 50 units or a multiple thereof. 	**6GT2390-0AA00**

Dimensional drawings

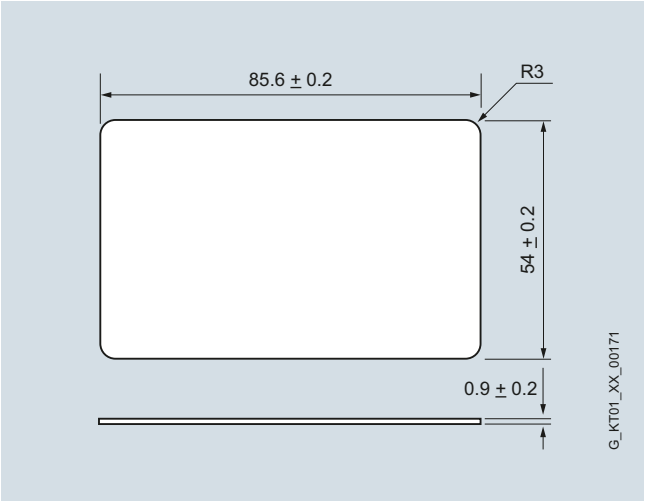

MDS D200 transponder

© Siemens AG 2016

Overview

The MDS D400 is a passive, maintenance-free transponder based on the ISO standard 15693 with FRAM technology.

The MDS D400 transponder can be used for the RFID system MOBY D as well as for SIMATIC RF300 (ISO mode) and SIMATIC RF200.

Application

ISO transponder, suitable for the identification of transport units in production-related logistics.

Technical specifications

Article number	**6GT2600-4AD00**
Product type designation	MDS D400 transponder
Suitability for operation	RF200, RF300, MOBY D
Wireless frequencies	
Operating frequency Rated value	13.56 MHz
Electrical data	
Range maximum	650 mm; range is reader dependent: observe
http://support.automation.siemens.com/WW/view/en/67384964	
Protocol with radio transmission	ISO 15693
Transfer rate with radio transmission maximum	26.5 kbit/s
Product feature multitag-capable	Yes
Product component Backup battery	No
Memory	
Type of memory	FRAM
Storage capacity of the user memory	2 000 byte
Type of memory organization	UID (fixed code) 8 bytes, user memory 2 000 bytes, configuration memory 40 bytes
Number of read cycles at ambient temperature < 40 °C maximum	1 000 000 000 000
Number of write cycles at ambient temperature < 40 °C maximum	1 000 000 000 000
Data retention time at ambient temperature < 40 °C not less than	10 y
Property of memory	Block-by-block write protection of the user memory
Type of transponder chip used	Fujitsu MB89R118
Mechanical data	
Material	PVC laminated plastic
Color	white
Mounting distance relating to metal surfaces recommended minimum	20 mm
Permitted ambient conditions	
Ambient temperature	
• during read/write access	-20 ... +60 °C
• outside the read/write area	-20 ... +60 °C
• during storage	-20 ... +60 °C
Protection class IP	IP67
Shock resistance	According to DIN EN 60721-3-7 Class 7 M3
Resistance to mechanical stress	acc. to ISO 10373/ ISO 7816-1
Design, dimensions and weight	
Width	54 mm
Height	0.8 mm
Depth	85.6 mm
Net weight	5 g
Mounting type	gluing, mounting bag (see accessories)
Product properties, functions, components general	
Product feature	
• printable	Yes
Printing process	Printable on both sides
Standards, specifications, approvals	
MTBF	228 y
Accessories	
Accessories	Fixing strap, holder, spacer

© Siemens AG 2016

Selection and ordering data

	Article No.
MDS D400 transponder 2 000 bytes EEPROM.	**6GT2600-4AD00**
Accessories	
Fixing pocket For MDS D400, usable together with spacer 6GT2190-0AA00. Ordering quantity 50 units or a multiple thereof. 	**6GT2190-0AB00**
Spacer For fixing pocket (6GT2190-0AB00), thickness 20 mm The purpose of the spacer is to maintain the recommended distance to the metal when installing the transponder. Ordering quantity 50 units or a multiple thereof. 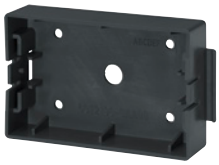	**6GT2190-0AA00**
Holder For MDS D400. Ordering quantity 50 units or a multiple thereof. 	**6GT2390-0AA00**

Dimensional drawings

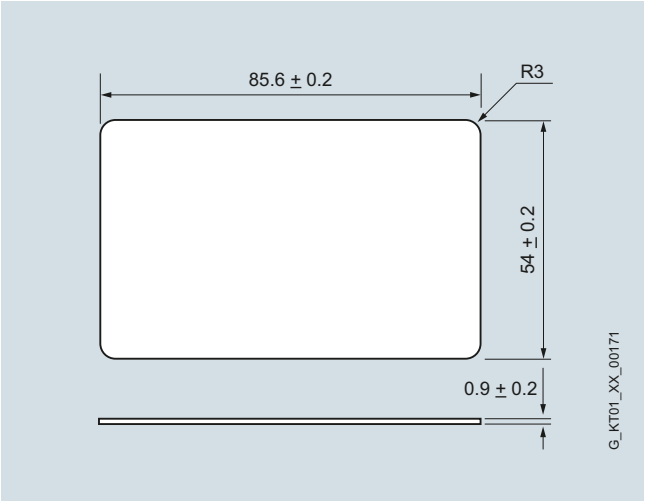

MDS D400 transponder

© Siemens AG 2016

Overview

The MDS D421 is a passive (maintenance-free) transponder based on ISO 15693, with FRAM technology.

Note

This transponder is used exclusively with the following readers/antennas:

- RF210R
- RF250R with ANT 8, ANT 12 or ANT 18
- RF350R with ANT 12 or ANT 18
- RF350M with external antenna

Application

The MDS D421 is designed for tool coding according to DIN 69873.

It can be used wherever small transponders and exact positioning are required, for example, for tool identification or on workpiece holders.

Technical specifications

Article number	**6GT2600-4AE00**
Product type designation	MDS D421 transponder
Suitability for operation	RF200, RF300
Wireless frequencies	
Operating frequency Rated value	13.56 MHz
Electrical data	
Range maximum	8 mm; range is reader dependent: observe
http://support.automation.siemens.com/WW/view/en/67384964	
Protocol with radio transmission	ISO 15693
Transfer rate with radio transmission maximum	26.5 kbit/s
Product feature multitag-capable	Yes
Product component Backup battery	No
Memory	
Type of memory	FRAM
Storage capacity of the user memory	2 000 byte
Type of memory organization	UID (fixed code) 8 bytes, user memory 2 000 bytes, configuration memory 40 bytes
Number of read cycles at ambient temperature < 40 °C maximum	1 000 000 000 000
Number of write cycles at ambient temperature < 40 °C maximum	1 000 000 000 000
Data retention time at ambient temperature < 40 °C not less than	10 y
Property of memory	Block-by-block write protection of the user memory
Type of transponder chip used	Fujitsu MB89R118
Mechanical data	
Material	Epoxy resin
Color	black
Mounting distance relating to metal surfaces recommended minimum	0 mm
Permitted ambient conditions	
Ambient temperature	
• during read/write access	-25 ... +85 °C
• outside the read/write area	-40 ... +100 °C
• during storage	-40 ... +100 °C
Protection class IP	IP67 / IPx9K
Shock resistance	According to DIN EN 60721-3-7 Class 7 M3
Shock acceleration	1 000 m/s²
Vibrational acceleration	200 m/s²
Design, dimensions and weight	
Height	4.5 mm
Diameter	10 mm
Net weight	1 g
Mounting type	gluing
Product properties, functions, components general	
Product feature	
• silicon-free	Yes
• printable	No

© Siemens AG 2016

Selection and ordering data

	Article No.
MDS D421 transponder 2 000 bytes FRAM Ordering quantity 10 units or a multiple thereof.	**6GT2600-4AE00**

Dimensional drawings

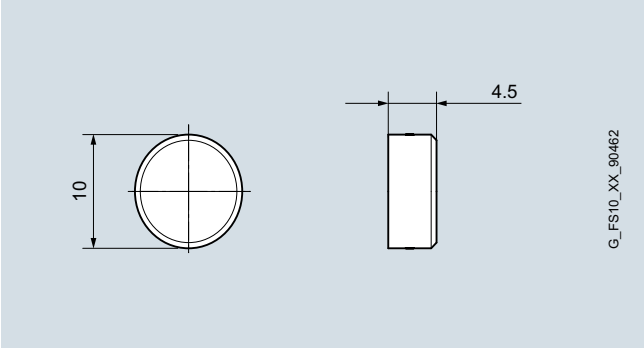

MDS D421 transponder

© Siemens AG 2016

2

Overview

The MDS D521 is a passive (maintenance-free) transponder based on ISO 15693, with FRAM technology.

The transponder can only be operated with the SIMATIC RF200 RFID system.

Application

The MDS D521 is designed for tool coding according to DIN 69873.

It can be used wherever small transponders and exact positioning are required, for example, for tool identification or on workpiece holders.

Technical specifications

Article number	**6GT2600-5AE00**
Product type designation	MDS D521 transponder
Suitability for operation	RF200
Wireless frequencies	
Operating frequency Rated value	13.56 MHz
Electrical data	
Range maximum	5 mm; range is reader dependent: observe
http://support.automation.siemens.com/WW/view/en/67384964	
Protocol with radio transmission	ISO 15693
Transfer rate with radio transmission maximum	26.5 kbit/s
Product feature multitag-capable	Yes
Product component Backup battery	No
Memory	
Type of memory	FRAM
Storage capacity of the user memory	8 192 byte
Type of memory organization	UID (fixed code) 8 bytes, user memory 8 192 bytes, configuration memory 40 bytes
Number of read cycles at ambient temperature < 40 °C maximum	1 000 000 000 000
Number of write cycles at ambient temperature < 40 °C maximum	1 000 000 000 000
Data retention time at ambient temperature < 40 °C not less than	10 y
Property of memory	Block-by-block write protection of the user memory
Type of transponder chip used	Fujitsu MB89R112
Mechanical data	
Material	Epoxy resin
Color	black
Mounting distance relating to metal surfaces recommended minimum	0 mm
Permitted ambient conditions	
Ambient temperature	
• during read/write access	-25 ... +85 °C
• outside the read/write area	-40 ... +100 °C
• during storage	-40 ... +100 °C
Protection class IP	IP67 / IPx9K
Shock resistance	According to DIN EN 60721-3-7 Class 7 M3
Shock acceleration	1 000 m/s²
Vibrational acceleration	200 m/s²
Design, dimensions and weight	
Height	4.5 mm
Diameter	10 mm
Net weight	1 g
Mounting type	gluing
Product properties, functions, components general	
Product feature	
• silicon-free	Yes
• printable	No

© Siemens AG 2016

Selection and ordering data

	Article No.
MDS D521 transponder 8 192 byte FRAM Ordering quantity 10 units or a multiple thereof.	**6GT2600-5AE00**

Dimensional drawings

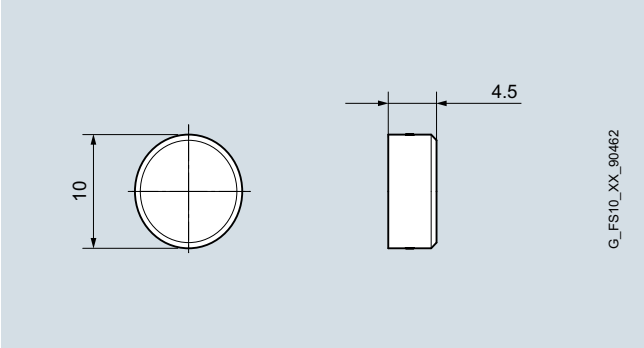

MDS D521 transponder

© Siemens AG 2016

Overview

The MDS D422 is a passive (maintenance-free) transponder based on ISO 15693, with FRAM technology.

The transponder can be operated with the SIMATIC RF200 and SIMATIC RF300 (ISO mode) RFID systems.

When operated with a mobile reader, the RF350M must be used with an external antenna.

Application

Identification of metallic workpiece holders, workpieces or containers.

Technical specifications

Article number	**6GT2600-4AF00**
Product type designation	MDS D422 transponder
Suitability for operation	RF200, RF300
Wireless frequencies	
Operating frequency Rated value	13.56 MHz
Electrical data	
Range maximum	19 mm; range is reader dependent: observe
http://support.automation.siemens.com/WW/view/en/67384964	
Protocol with radio transmission	ISO 15693
Transfer rate with radio transmission maximum	26.5 kbit/s
Product feature multitag-capable	Yes
Product component Backup battery	No
Memory	
Type of memory	FRAM
Storage capacity of the user memory	2 000 byte
Type of memory organization	UID (fixed code) 8 bytes, user memory 2 000 bytes, configuration memory 40 bytes
Number of read cycles at ambient temperature < 40 °C maximum	1 000 000 000 000
Number of write cycles at ambient temperature < 40 °C maximum	1 000 000 000 000
Data retention time at ambient temperature < 40 °C not less than	10 y
Property of memory	Block-by-block write protection of the user memory
Type of transponder chip used	Fujitsu MB89R118
Mechanical data	
Material	PA6.6 GF / brass, nickel-plated
Color	black / silver
Tightening torque of the screw for securing the equipment maximum	1 Nm
Mounting distance relating to metal surfaces recommended minimum	0 mm
Permitted ambient conditions	
Ambient temperature	
• during read/write access	-25 ... +85 °C
• outside the read/write area	-40 ... +100 °C
• during storage	-40 ... +100 °C
Protection class IP	IP68
Shock resistance	According to DIN EN 60721-3-7 Class 7 M3
Shock acceleration	500 m/s²
Vibrational acceleration	200 m/s²
Design, dimensions and weight	
Height	6 mm
Diameter	20 mm
Net weight	13 g
Mounting type	gluing, screwing
Product properties, functions, components general	
Product feature	
• silicon-free	Yes
• printable	No
Standards, specifications, approvals	
MTBF	228 y

© Siemens AG 2016

Selection and ordering data

	Article No.
MDS D422 transponder 2 000 bytes FRAM One installation tool is included in each packing unit. Ordering quantity 5 units or a multiple thereof.	**6GT2600-4AF00**

Dimensional drawings

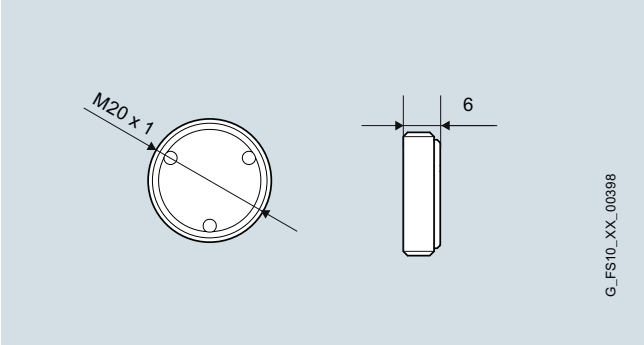

MDS D422 transponder

© Siemens AG 2016

2

Overview

The MDS D522 is a passive (maintenance-free) transponder based on ISO 15693, with FRAM technology.

The transponder can only be operated with the RFID system SIMATIC RF200.

Operation with a mobile reader is currently only possible with RF210M.

Application

Identification of metallic workpiece holders, workpieces or containers.

Technical specifications

Article number	**6GT2600-5AF00**	**6GT2600-5AF00-0AX0**
Product type designation	MDS D522 transponder	MDS D522 transponder
	For gluing or screwing	For clipping
Suitability for operation	RF200	RF200
Wireless frequencies		
Operating frequency Rated value	13.56 MHz	13.56 MHz
Electrical data		
Range maximum	35 mm; range is reader dependent: observe	35 mm; range is reader dependent: observe
http://support.automation.siemens.com/WW/view/en/67384964		
Protocol with radio transmission	ISO 15693	ISO 15693
Transfer rate with radio transmission maximum	26.5 kbit/s	26.5 kbit/s
Product feature multitag-capable	Yes	Yes
Product component Backup battery	No	No
Memory		
Type of memory	FRAM	FRAM
Storage capacity of the user memory	8 192 byte	8 192 byte
Type of memory organization	UID (fixed code) 8 bytes, user memory 8 192 bytes, configuration memory 40 bytes	UID (fixed code) 8 bytes, user memory 8 192 bytes, configuration memory 48 bytes
Number of read cycles at ambient temperature < 40 °C maximum	1 000 000 000 000	1 000 000 000 000
Number of write cycles at ambient temperature < 40 °C maximum	1 000 000 000 000	1 000 000 000 000
Data retention time at ambient temperature < 40 °C not less than	10 y	10 y
Property of memory	Block-by-block write protection of the user memory	Block-by-block write protection of the user memory
Type of transponder chip used	Fujitsu MB89R112	Fujitsu MB89R112
Mechanical data		
Material	PA6.6 GF / brass, nickel-plated	PA6.6 GF
Color	black / silver	black
Tightening torque of the screw for securing the equipment maximum	1 Nm	-
Mounting distance relating to metal surfaces recommended minimum	0 mm	0 mm
Permitted ambient conditions		
Ambient temperature		
• during read/write access	-25 ... +85 °C	-25 ... +85 °C
• outside the read/write area	-40 ... +100 °C	-40 ... +100 °C
• during storage	-40 ... +100 °C	-40 ... +100 °C
Protection class IP	IP68	IP68
Shock resistance	According to DIN EN 60721-3-7 Class 7 M3	According to DIN EN 60721-3-7 Class 7 M3
Shock acceleration	500 m/s²	500 m/s²
Vibrational acceleration	200 m/s²	200 m/s²

© Siemens AG 2016

Article number	**6GT2600-5AF00**	**6GT2600-5AF00-0AX0**
Product type designation	MDS D522 transponder	MDS D522 transponder
	For gluing or screwing	For clipping
Suitability for operation	RF200	RF200
Design, dimensions and weight		
Height	6 mm	5.2 mm
Diameter	20 mm	18 mm
Net weight	13 g	1.2 g
Mounting type	gluing, screwing	Clip into the pre-milled contour according to the operating instructions
Product properties, functions, components general		
Product feature		
• silicon-free	Yes	Yes
• printable	No	No
Standards, specifications, approvals		
MTBF	228 y	200 y

Selection and ordering data

	Article No.
MDS D522 transponder	
For SIMATIC RF200	
8 192 byte FRAM	
Ordering quantity 10 units or a multiple thereof.	
• For attachment with glue or screws onto metal. One screw-in aid is included in each packing unit.	**6GT2600-5AF00**
• for clipping onto metal	**6GT2600-5AF00-0AX0**

Dimensional drawings

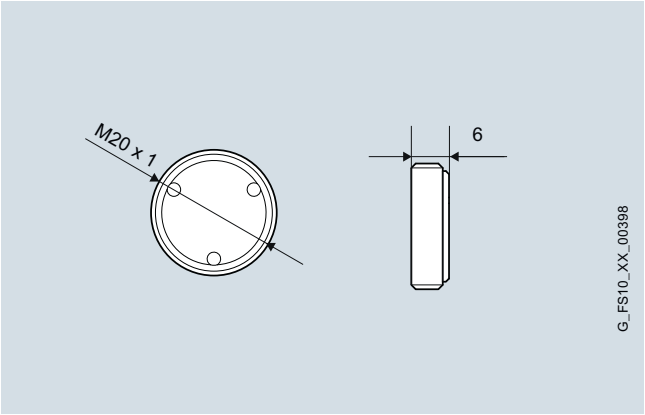

MDS D522 transponder for gluing or screwing (6GT2600-5AF00)

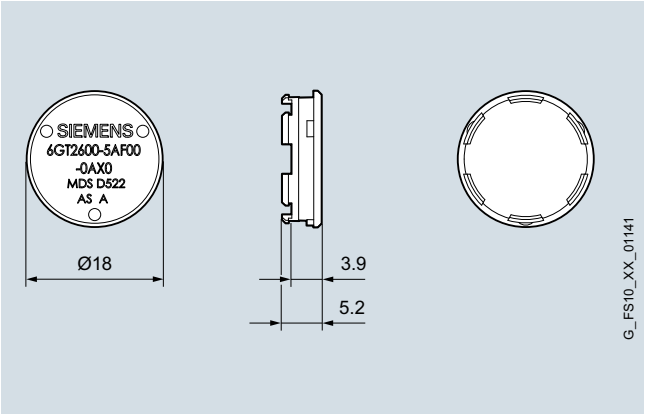

MDS D522 transponder for clip attachment (6GT2600-5AF00-0AX0)

© Siemens AG 2016

Overview

The MDS D423 is a passive (maintenance-free) transponder based on ISO 15693, with FRAM technology.

The transponder can be operated with the SIMATIC RF200 and SIMATIC RF300 (ISO mode) RFID systems.

Application

The particularly compact transponder of small design can be flush-mounted in metal and is thus suitable for identifying metallic workpiece holders, workpieces or containers.

As a result of its high IP68 / IPx9K degree of protection, it is suitable for use in particularly harsh environments such as the passage through washers.

Technical specifications

Article number	**6GT2600-4AA00**
Product type designation	MDS D423 transponder
Suitability for operation	RF200, RF300
Wireless frequencies	
Operating frequency Rated value	13.56 MHz
Electrical data	
Range maximum	80 mm; range is reader dependent: observe
http://support.automation.siemens.com/WW/view/en/67384964	
Protocol with radio transmission	ISO 15693
Transfer rate with radio transmission maximum	26.5 kbit/s
Product feature multitag-capable	Yes
Product component Backup battery	No
Memory	
Type of memory	FRAM
Storage capacity of the user memory	2 000 byte
Type of memory organization	UID (fixed code) 8 bytes, user memory 2 000 bytes, configuration memory 40 bytes
Number of read cycles at ambient temperature < 40 °C maximum	1 000 000 000 000
Number of write cycles at ambient temperature < 40 °C maximum	1 000 000 000 000
Data retention time at ambient temperature < 40 °C not less than	10 y
Property of memory	Block-by-block write protection of the user memory
Type of transponder chip used	Fujitsu MB89R118
Mechanical data	
Material	PPS
Color	black
Tightening torque of the screw for securing the equipment maximum	1 Nm
Mounting distance relating to metal surfaces recommended minimum	0 mm
Permitted ambient conditions	
Ambient temperature	
• during read/write access	-25 ... +85 °C
• outside the read/write area	-40 ... +100 °C
• during storage	-40 ... +100 °C
Protection class IP	IP68 / IPx9K
Shock resistance	According to DIN EN 60721-3-7 Class 7 M3
Shock acceleration	500 m/s²
Vibrational acceleration	200 m/s²
Design, dimensions and weight	
Height	8 mm
Diameter	30 mm
Net weight	15 g
Mounting type	M4 countersunk screw
Product properties, functions, components general	
Product feature	
• silicon-free	Yes
• printable	No
Standards, specifications, approvals	
MTBF	228 y
Accessories	
Accessories	mounting hood

© Siemens AG 2016

Selection and ordering data

	Article No.
MDS D423 transponder 2 000 bytes FRAM Ordering quantity 10 units or a multiple thereof.	**6GT2600-4AA00**
Accessories	
Mounting cover Length = 50 mm, height = 10 mm, temperature range up to 100 °C, ordering quantity 10 units or a multiple thereof.	**6GT2690-0AE00**

Dimensional drawings

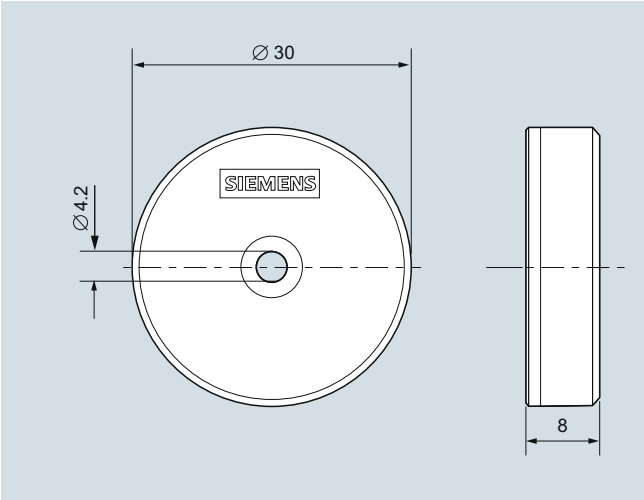

MDS D423 transponder

© Siemens AG 2016

2

Overview

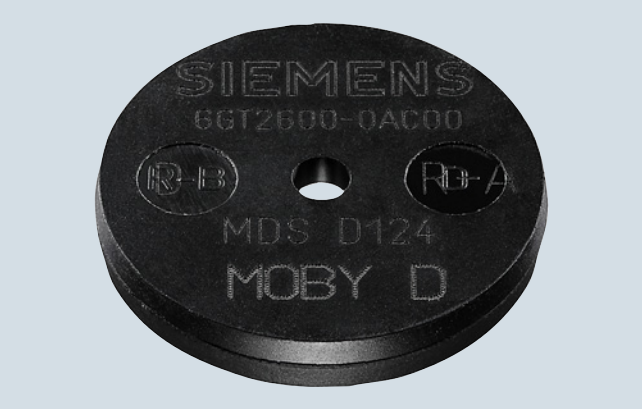

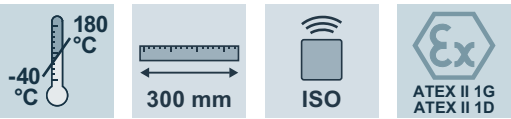

The MDS D124 is a mobile, passive, maintenance-free transponder based on the ISO 15693 standard.

The MDS D124 can be used for the RFID system MOBY D as well as for SIMATIC RF200 and SIMATIC RF300 (ISO mode).

Application

This transponder can even be used problem-free under extreme environmental conditions (e.g. when subjected to temperatures up to +180 °C).

Technical specifications

Article number	**6GT2600-0AC10**
Product type designation	MDS D124 transponder
Suitability for operation	RF200, RF300, MOBY D
Wireless frequencies	
Operating frequency Rated value	13.56 MHz
Electrical data	
Range maximum	300 mm; range is reader dependent: observe
http://support.automation.siemens.com/WW/view/en/67384964	
Protocol with radio transmission	ISO 15693
Transfer rate with radio transmission maximum	26.5 kbit/s
Product feature multitag-capable	Yes
Product component Backup battery	No

Article number	**6GT2600-0AC10**
Product type designation	MDS D124 transponder
Suitability for operation	RF200, RF300, MOBY D
Memory	
Type of memory	EEPROM
Storage capacity of the user memory	112 byte
Type of memory organization	UID (fixed code) 8 bytes, user memory 112 bytes, configuration memory 8 bytes
Number of read cycles at ambient temperature < 40 °C maximum	100 000 000 000 000
Number of write cycles at ambient temperature < 40 °C maximum	1 000 000
Data retention time at ambient temperature < 40 °C not less than	10 y
Property of memory	Block-by-block write protection of the user memory
Type of transponder chip used	NXP I-Code SLI
Mechanical data	
Material	PPS
Color	black
Tightening torque of the screw for securing the equipment maximum	1 Nm
Mounting distance relating to metal surfaces recommended minimum	15 mm
Permitted ambient conditions	
Ambient temperature	
• during read/write access	-25 ... +125 °C
• outside the read/write area	-40 ... +180 °C
• during storage	-40 ... +125 °C
Ambient condition for operation	Operating temperature permanent up to 100 °C, at 180 °C: up to 5 000 hours or 3 000 temperature cycles
Protection class IP	IP68 / IPx9K
Shock resistance	According to DIN EN 60721-3-7 Class 7 M3
Shock acceleration	1 000 m/s²
Vibrational acceleration	200 m/s²
Design, dimensions and weight	
Height	4 mm
Diameter	27 mm
Net weight	5 g
Mounting type	M3 screw, gluing
Product properties, functions, components general	
Product feature	
• silicon-free	Yes
• printable	No
Standards, specifications, approvals	
Certificate of suitability	Ex: II 1 G Ex ia IIC T3/T6 Ga / II 1 D Ex ia IIIC T80°C/T180°C
MTBF	171 y
Accessories	
Accessories	Mounting support and spacer

© Siemens AG 2016

Selection and ordering data

	Article No.
MDS D124 transponder 112 bytes EEPROM Ordering quantity 20 units or a multiple thereof.	**6GT2600-0AC10**
Accessories	
Mounting support and spacer For MDS D124, MDS D324, MDS D424, MDS D524 and RF320T. Necessary for mounting onto metal surfaces. Diameter = 35 mm, height = 15 mm Ordering quantity 20 units or a multiple thereof.	**6GT2690-0AK00**

Dimensional drawings

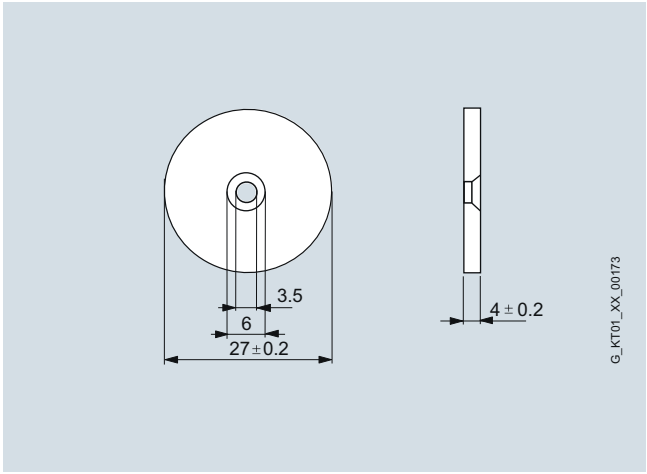

MDS D124 transponder

© Siemens AG 2016

2

Overview

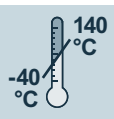

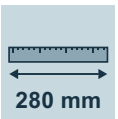

The MDS D324 is a passive (maintenance-free) transponder based on ISO 15693.

The MDS D324 can be used for the RFID system MOBY D as well as for SIMATIC RF200 and SIMATIC RF300 (ISO mode).

Application

The MDS D324 was developed for applications in production and distribution logistics as well as product identification.

For the user, the usable application memory amounts to 992 byte.

This transponder can also be easily used in harsh environments under extreme environmental conditions (e.g. with higher thermal stress).

Technical specifications

Article number	**6GT2600-3AC00**
Product type designation	MDS D324 transponder
Suitability for operation	RF200, RF300, MOBY D
Wireless frequencies	
Operating frequency Rated value	13.56 MHz
Electrical data	
Range maximum	280 mm; range is reader dependent: observe
http://support.automation.siemens.com/WW/view/en/67384964	
Protocol with radio transmission	ISO 15693
Transfer rate with radio transmission maximum	26.5 kbit/s
Product feature multitag-capable	Yes
Product component Backup battery	No
Memory	
Type of memory	EEPROM
Storage capacity of the user memory	992 byte
Type of memory organization	UID (fixed code) 8 bytes, user memory 992 bytes, configuration memory 24 bytes
Number of read cycles at ambient temperature < 40 °C maximum	100 000 000 000 000
Number of write cycles at ambient temperature < 40 °C maximum	1 000 000
Data retention time at ambient temperature < 40 °C not less than	10 y
Property of memory	Block-by-block write protection of the user memory
Type of transponder chip used	Infineon My-D SRF 55V10P
Mechanical data	
Material	Epoxy resin
Color	black
Tightening torque of the screw for securing the equipment maximum	1 Nm
Mounting distance relating to metal surfaces recommended minimum	15 mm
Permitted ambient conditions	
Ambient temperature	
• during read/write access	-25 ... +125 °C
• outside the read/write area	-40 ... +140 °C
• during storage	-40 ... +140 °C
Protection class IP	IP67
Shock resistance	According to DIN EN 60721-3-7 Class 7 M3
Shock acceleration	1 000 m/s²
Vibrational acceleration	200 m/s²
Design, dimensions and weight	
Height	4 mm
Diameter	27 mm
Net weight	5 g
Mounting type	M3 screw, gluing
Product properties, functions, components general	
Product feature	
• silicon-free	Yes
• printable	No
Standards, specifications, approvals	
MTBF	171 y
Accessories	
Accessories	Mounting support and spacer

© Siemens AG 2016

Selection and ordering data

	Article No.
MDS D324 transponder 992 bytes EEPROM Ordering quantity 20 units or a multiple thereof.	**6GT2600-3AC00**
Accessories	
Mounting support and spacer For MDS D124, MDS D324, MDS D424, MDS D524 and RF320T. Necessary for mounting onto metal surfaces. Diameter = 35 mm, height = 15 mm Ordering quantity 20 units or a multiple thereof.	**6GT2690-0AK00**

Dimensional drawings

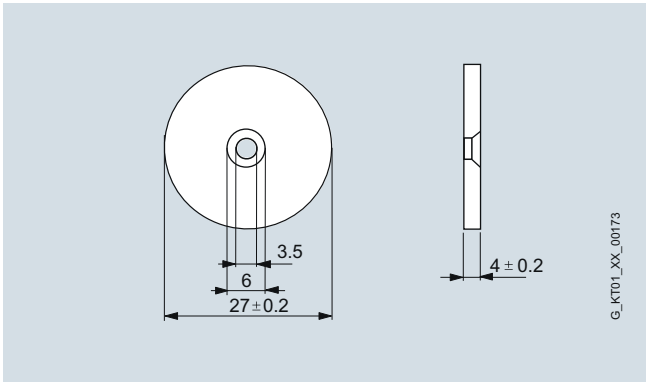

MDS D324 transponder

© Siemens AG 2016

2

Overview

The MDS D424 is a passive (maintenance-free) transponder based on ISO 15693, with FRAM technology.

The MDS D424 can be used for the RFID system MOBY D as well as for SIMATIC RF200 and SIMATIC RF300 (ISO mode).

Application

The MDS D424 was developed for applications in production and distribution logistics as well as for use in assembly and production lines.

Technical specifications

Article number	**6GT2600-4AC00**
Product type designation	MDS D424 transponder
Suitability for operation	RF200, RF300, MOBY D
Wireless frequencies	
Operating frequency Rated value	13.56 MHz
Electrical data	
Range maximum	300 mm; range is reader dependent: observe
http://support.automation.siemens.com/WW/view/en/67384964	
Protocol with radio transmission	ISO 15693
Transfer rate with radio transmission maximum	26.5 kbit/s
Product feature multitag-capable	Yes
Product component Backup battery	No
Memory	
Type of memory	FRAM
Storage capacity of the user memory	2 000 byte
Type of memory organization	UID (fixed code) 8 bytes, user memory 2 000 bytes, configuration memory 40 bytes
Number of read cycles at ambient temperature < 40 °C maximum	1 000 000 000 000
Number of write cycles at ambient temperature < 40 °C maximum	1 000 000 000 000
Data retention time at ambient temperature < 40 °C not less than	10 y
Property of memory	Block-by-block write protection of the user memory
Type of transponder chip used	Fujitsu MB89R118
Mechanical data	
Material	Epoxy resin
Color	black
Tightening torque of the screw for securing the equipment maximum	1 Nm
Mounting distance relating to metal surfaces recommended minimum	15 mm
Permitted ambient conditions	
Ambient temperature	
• during read/write access	-25 ... +85 °C
• outside the read/write area	-40 ... +100 °C
• during storage	-40 ... +100 °C
Protection class IP	IP67 / IPx9K
Shock resistance	According to DIN EN 60721-3-7 Class 7 M3
Shock acceleration	1 000 m/s²
Vibrational acceleration	200 m/s²
Design, dimensions and weight	
Height	4 mm
Diameter	27 mm
Net weight	5 g
Mounting type	M3 screw, gluing
Product properties, functions, components general	
Product feature	
• silicon-free	Yes
• printable	No
Standards, specifications, approvals	
MTBF	171 y
Accessories	
Accessories	Mounting support and spacer

© Siemens AG 2016

Selection and ordering data

	Article No.
MDS D424 transponder 2 000 bytes FRAM Ordering quantity 20 units or a multiple thereof.	**6GT2600-4AC00**
Accessories	
Mounting support and spacer For MDS D124, MDS D324, MDS D424, MDS D524 and RF320T. Necessary for mounting onto metal surfaces. Diameter = 35 mm, height = 15 mm Ordering quantity 20 units or a multiple thereof.	**6GT2690-0AK00**

Dimensional drawings

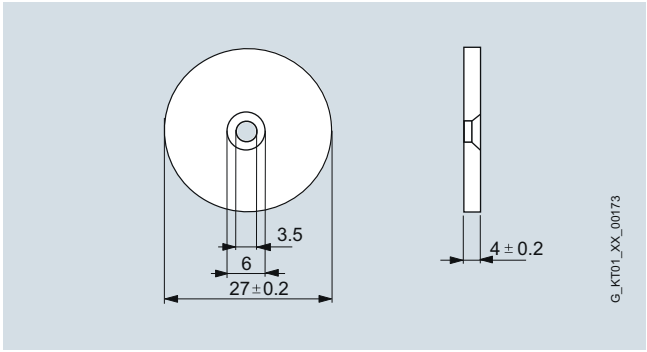

MDS D424 transponder

© Siemens AG 2016

2

Overview

The MDS D524 is a passive (maintenance-free) transponder based on ISO 15693, with FRAM technology.

The transponder can only be operated with the SIMATIC RF200 RFID system.

Application

The transponder is designed for use in production and distribution logistics as well as in assembly and production lines.

Technical specifications

Article number	**6GT2600-5AC00**
Product type designation	MDS D524 transponder
Suitability for operation	RF200
Wireless frequencies	
Operating frequency Rated value	13.56 MHz
Electrical data	
Range maximum	300 mm; range is reader dependent: observe
http://support.automation.siemens.com/WW/view/en/67384964	
Protocol with radio transmission	ISO 15693
Transfer rate with radio transmission maximum	26.5 kbit/s
Product feature multitag-capable	Yes
Product component Backup battery	No
Memory	
Type of memory	FRAM
Storage capacity of the user memory	8 192 byte
Type of memory organization	UID (fixed code) 8 bytes, user memory 8 192 bytes, configuration memory 40 bytes
Number of read cycles at ambient temperature < 40 °C maximum	1 000 000 000 000
Number of write cycles at ambient temperature < 40 °C maximum	1 000 000 000 000
Data retention time at ambient temperature < 40 °C not less than	10 y
Property of memory	Block-by-block write protection of the user memory
Type of transponder chip used	Fujitsu MB89R112
Mechanical data	
Material	Epoxy resin
Color	black
Tightening torque of the screw for securing the equipment maximum	1 Nm
Mounting distance relating to metal surfaces recommended minimum	15 mm
Permitted ambient conditions	
Ambient temperature	
• during read/write access	-25 ... +85 °C
• outside the read/write area	-40 ... +100 °C
• during storage	-40 ... +100 °C
Protection class IP	IP67 / IPx9K
Shock resistance	According to DIN EN 60721-3-7 Class 7 M3
Shock acceleration	1 000 m/s²
Vibrational acceleration	200 m/s²
Design, dimensions and weight	
Height	4 mm
Diameter	27 mm
Net weight	5 g
Mounting type	M3 screw, gluing
Product properties, functions, components general	
Product feature	
• silicon-free	Yes
• printable	No
Standards, specifications, approvals	
MTBF	171 y
Accessories	
Accessories	Mounting support and spacer

© Siemens AG 2016

Selection and ordering data

	Article No.
MDS D524 transponder 8 192 byte FRAM Ordering quantity 20 units or a multiple thereof.	**6GT2600-5AC00**
Accessories	
Mounting support and spacer For MDS D124, MDS D324, MDS D424, MDS D524 and RF320T. Necessary for mounting onto metal surfaces. Diameter = 35 mm, height = 15 mm Ordering quantity 20 units or a multiple thereof.	**6GT2690-0AK00**

Dimensional drawings

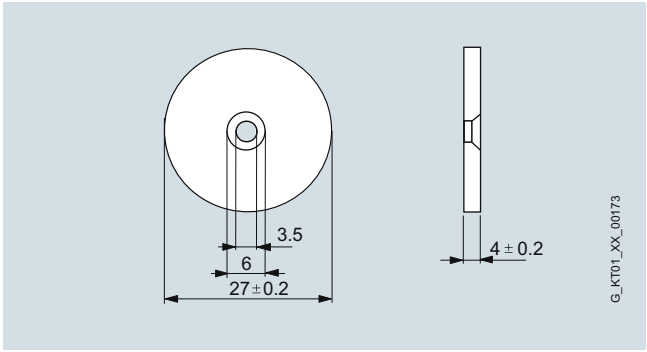

MDS D524 transponder

© Siemens AG 2016

Overview

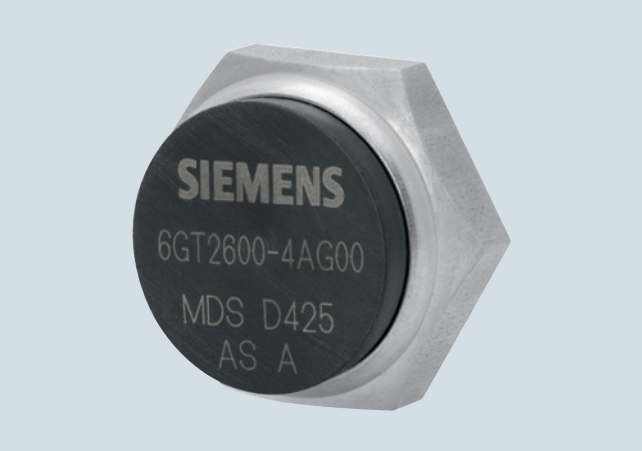

The MDS D425 is a passive (maintenance-free) transponder based on ISO 15693, with FRAM technology.

The MDS D425 can be operated with the SIMATIC RF200 and SIMATIC RF300 (ISO mode) RFID systems.

Application

The MDS D425 is a compact and rugged ISO transponder suitable for screw mounting.

It has been designed for applications in assembly and production lines in the powertrain sector.

Technical specifications

Article number	**6GT2600-4AG00**
Product type designation	MDS D425 transponder
Suitability for operation	RF200, RF300
Wireless frequencies	
Operating frequency Rated value	13.56 MHz
Electrical data	
Range maximum	45 mm; range is reader dependent: observe
http://support.automation.siemens.com/WW/view/en/67384964	
Protocol with radio transmission	ISO 15693
Transfer rate with radio transmission maximum	26.5 kbit/s
Product feature multitag-capable	Yes
Product component Backup battery	No
Memory	
Type of memory	FRAM
Storage capacity of the user memory	2 000 byte
Type of memory organization	UID (fixed code) 8 bytes, user memory 2 000 bytes, configuration memory 40 bytes
Number of read cycles at ambient temperature < 40 °C maximum	1 000 000 000 000
Number of write cycles at ambient temperature < 40 °C maximum	1 000 000 000 000
Data retention time at ambient temperature < 40 °C not less than	10 y
Property of memory	Block-by-block write protection of the user memory
Type of transponder chip used	Fujitsu MB89R118
Mechanical data	
Material	PA6.6 GF / stainless steel
Color	black / silver
Tightening torque of the screw for securing the equipment maximum	6 Nm
Mounting distance relating to metal surfaces recommended minimum	0 mm
Permitted ambient conditions	
Ambient temperature	
• during read/write access	-25 ... +85 °C
• outside the read/write area	-40 ... +125 °C
• during storage	-40 ... +125 °C
Protection class IP	IP68 / IPx9K
Shock resistance	According to DIN EN 60721-3-7 Class 7 M3
Shock acceleration	500 m/s²
Vibrational acceleration	200 m/s²
Design, dimensions and weight	
Height	10 mm
Diameter	24 mm
Net weight	35 g
Mounting type	screwing (M6)
Product properties, functions, components general	
Product feature	
• silicon-free	Yes
• printable	No
Standards, specifications, approvals	
MTBF	228 y

© Siemens AG 2016

Selection and ordering data

	Article No.
MDS D425 transponder 2 000 bytes FRAM Ordering quantity 5 units or a multiple thereof.	**6GT2600-4AG00**

Dimensional drawings

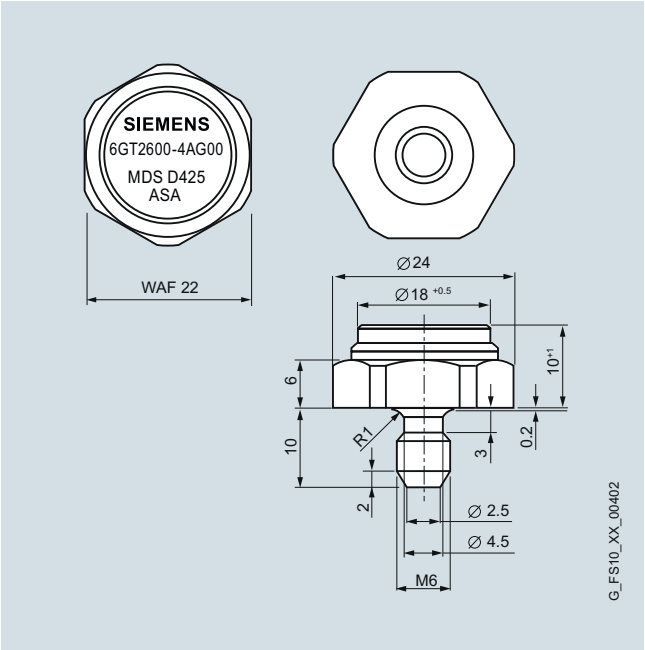

MDS D425 transponder

© Siemens AG 2016

Overview

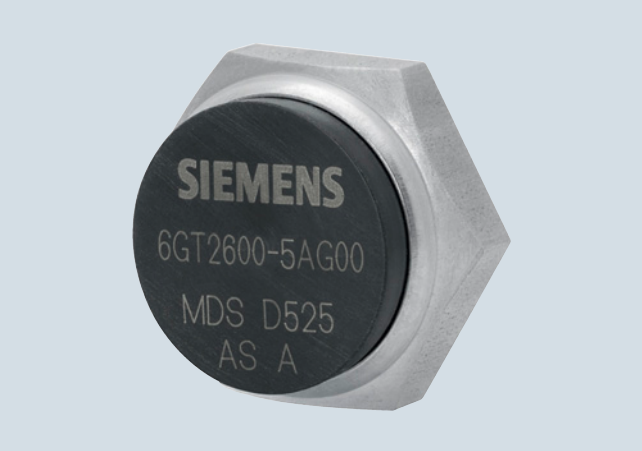

The MDS D525 is a passive (maintenance-free) transponder based on ISO 15693, with FRAM technology.

The transponder can only be operated with the SIMATIC RF200 RFID system.

Application

The MDS D525 is a compact and rugged ISO transponder suitable for screw mounting.

It is designed for use in assembly and production lines as well as in the powertrain sector.

Technical specifications

Article number	**6GT2600-5AG00**
Product type designation	MDS D525 transponder
Suitability for operation	RF200
Wireless frequencies	
Operating frequency Rated value	13.56 MHz
Electrical data	
Range maximum	50 mm; range is reader dependent: observe
http://support.automation.siemens.com/WW/view/en/67384964	
Protocol with radio transmission	ISO 15693
Transfer rate with radio transmission maximum	26.5 kbit/s
Product feature multitag-capable	Yes
Product component Backup battery	No
Memory	
Type of memory	FRAM
Storage capacity of the user memory	8 192 byte
Type of memory organization	UID (fixed code) 8 bytes, user memory 8 192 bytes, configuration memory 40 bytes
Number of read cycles at ambient temperature < 40 °C maximum	1 000 000 000 000
Number of write cycles at ambient temperature < 40 °C maximum	1 000 000 000 000
Data retention time at ambient temperature < 40 °C not less than	10 y
Property of memory	Block-by-block write protection of the user memory
Type of transponder chip used	Fujitsu MB89R112
Mechanical data	
Material	PA6.6 GF / stainless steel
Color	black / silver
Tightening torque of the screw for securing the equipment maximum	6 Nm
Mounting distance relating to metal surfaces recommended minimum	0 mm
Permitted ambient conditions	
Ambient temperature	
• during read/write access	-25 ... +85 °C
• outside the read/write area	-40 ... +125 °C
• during storage	-40 ... +125 °C
Protection class IP	IP68 / IPx9K
Shock resistance	According to DIN EN 60721-3-7 Class 7 M3
Shock acceleration	500 m/s²
Vibrational acceleration	200 m/s²
Design, dimensions and weight	
Height	10 mm
Diameter	24 mm
Net weight	35 g
Mounting type	screwing (M6)
Product properties, functions, components general	
Product feature	
• silicon-free	Yes
• printable	No
Standards, specifications, approvals	
MTBF	228 y

© Siemens AG 2016

Selection and ordering data

	Article No.
MDS D525 transponder 8 192 byte FRAM Order quantity 5 units or a multiple thereof.	**6GT2600-5AG00**

Dimensional drawings

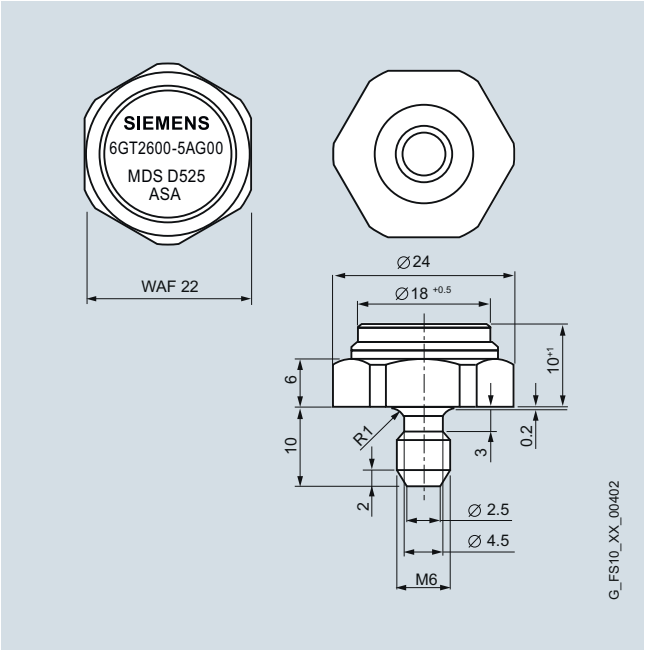

MDS D525 transponder

© Siemens AG 2016

2

Overview

The MDS D126 is a passive (maintenance-free) transponder based on ISO 15693.

The MDS D126 can be used for the RFID system MOBY D as well as for SIMATIC RF200 and SIMATIC RF300 (ISO mode).

Application

The MDS D126 is a compact and rugged ISO transponder suitable for the identification of transport units in production-related logistics.

The transponder can also be used in harsh environments.

Technical specifications

Article number	**6GT2600-0AE00**
Product type designation	MDS D126 transponder
Suitability for operation	RF200, RF300, MOBY D
Wireless frequencies	
Operating frequency Rated value	13.56 MHz
Electrical data	
Range maximum	500 mm; range is reader dependent: observe
http://support.automation.siemens.com/WW/view/en/67384964	
Protocol with radio transmission	ISO 15693
Transfer rate with radio transmission maximum	26.5 kbit/s
Product feature multitag-capable	Yes
Product component Backup battery	No
Memory	
Type of memory	EEPROM
Storage capacity of the user memory	112 byte
Type of memory organization	UID (fixed code) 8 bytes, user memory 112 bytes, configuration memory 8 bytes
Number of read cycles at ambient temperature < 40 °C maximum	100 000 000 000 000
Number of write cycles at ambient temperature < 40 °C maximum	1 000 000
Data retention time at ambient temperature < 40 °C not less than	10 y
Property of memory	Block-by-block write protection of the user memory
Type of transponder chip used	NXP I-Code SLI
Mechanical data	
Material	PA6.6 GF
Color	black
Tightening torque of the screw for securing the equipment maximum	1 Nm
Mounting distance relating to metal surfaces recommended minimum	25 mm
Permitted ambient conditions	
Ambient temperature	
• during read/write access	-25 ... +85 °C
• outside the read/write area	-40 ... +100 °C
• during storage	-40 ... +100 °C
Protection class IP	IP68
Shock resistance	According to DIN EN 60721-3-7 Class 7 M3
Shock acceleration	500 m/s²
Vibrational acceleration	200 m/s²
Design, dimensions and weight	
Height	3.6 mm
Diameter	50 mm
Net weight	13 g
Mounting type	M4 screw
Product properties, functions, components general	
Product feature	
• printable	No
Standards, specifications, approvals	
MTBF	171 y
Accessories	
Accessories	Mounting support and spacer

© Siemens AG 2016

Selection and ordering data

	Article No.
MDS D126 transponder 112 bytes EEPROM Ordering quantity 250 units or a multiple thereof.	**6GT2600-0AE00**
Accessories	
Mounting support and spacer For MDS D126, necessary for mounting onto metal surfaces. Diameter = 60 mm, height = 30 mm. Ordering quantity 50 units or a multiple thereof.	**6GT2690-0AL00**

Dimensional drawings

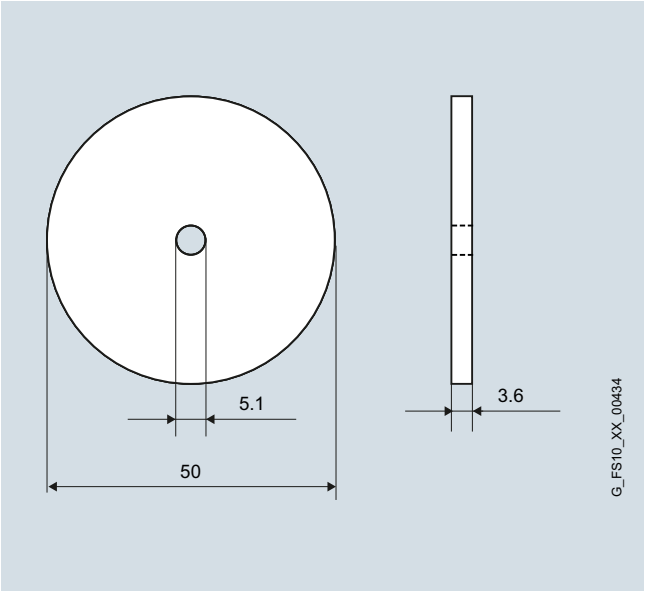

MDS D126 transponder

© Siemens AG 2016

Overview

The MDS D426 is a passive (maintenance-free) transponder based on ISO 15693, with FRAM technology.

The MDS D426 can be used for the RFID system MOBY D as well as for SIMATIC RF200 and SIMATIC RF300 (ISO mode).

Application

The MDS D426 is a compact and rugged ISO transponder suitable for the identification of transport units in production-related logistics.

The transponder can also be used in harsh environments.

Technical specifications

Article number	**6GT2600-4AH00**
Product type designation	MDS D426 transponder
Suitability for operation	RF200, RF300, MOBY D
Wireless frequencies	
Operating frequency Rated value	13.56 MHz
Electrical data	
Range maximum	400 mm; range is reader dependent: observe
http://support.automation.siemens.com/WW/view/en/67384964	
Protocol with radio transmission	ISO 15693
Transfer rate with radio transmission maximum	26.5 kbit/s
Product feature multitag-capable	Yes
Product component Backup battery	No
Memory	
Type of memory	FRAM
Storage capacity of the user memory	2 000 byte
Type of memory organization	UID (fixed code) 8 bytes, user memory 2 000 bytes, configuration memory 40 bytes
Number of read cycles at ambient temperature < 40 °C maximum	1 000 000 000 000
Number of write cycles at ambient temperature < 40 °C maximum	1 000 000 000 000
Data retention time at ambient temperature < 40 °C not less than	10 y
Property of memory	Block-by-block write protection of the user memory
Type of transponder chip used	Fujitsu MB89R118
Mechanical data	
Material	PA6.6 GF
Color	black
Tightening torque of the screw for securing the equipment maximum	1 Nm
Mounting distance relating to metal surfaces recommended minimum	25 mm
Permitted ambient conditions	
Ambient temperature	
• during read/write access	-25 ... +85 °C
• outside the read/write area	-40 ... +100 °C
• during storage	-40 ... +100 °C
Protection class IP	IP68
Shock resistance	According to DIN EN 60721-3-7 Class 7 M3
Shock acceleration	500 m/s²
Vibrational acceleration	200 m/s²
Design, dimensions and weight	
Height	3.6 mm
Diameter	50 mm
Net weight	13 g
Mounting type	M4 screw
Product properties, functions, components general	
Product feature	
• printable	No
Standards, specifications, approvals	
MTBF	228 y
Accessories	
Accessories	Mounting support and spacer

© Siemens AG 2016

Selection and ordering data

	Article No.
MDS D426 transponder 2 000 bytes FRAM Ordering quantity 50 units or a multiple thereof.	**6GT2600-4AH00**
Accessories	
Mounting support and spacer For MDS D426, necessary for mounting onto metal surfaces. Diameter = 60 mm, height = 30 mm Ordering quantity 50 units or a multiple thereof.	**6GT2690-0AL00**

Dimensional drawings

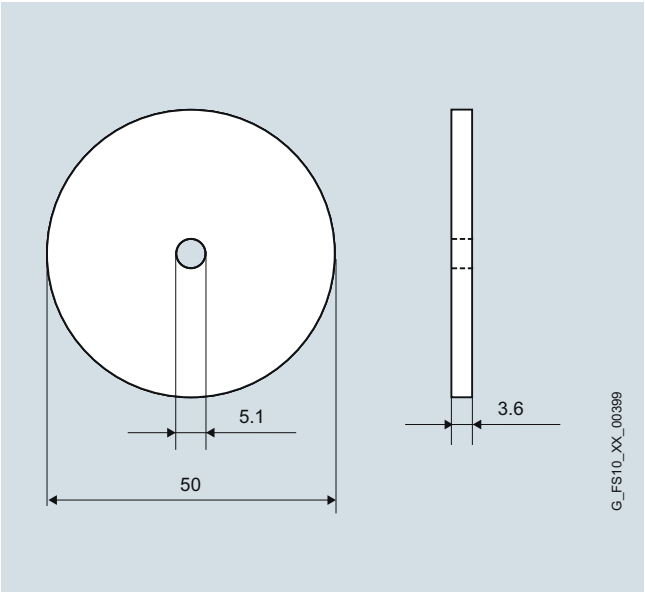

MDS D426 transponder

© Siemens AG 2016

Overview

The MDS D526 is a passive (maintenance-free) transponder based on ISO 15693, with FRAM technology.

The transponder can only be operated with the SIMATIC RF200 RFID system.

Application

The MDS D526 is a compact and rugged ISO transponder which can also be used under harsh environmental conditions.

It is designed for the identification of transport units in production-related logistics.

Technical specifications

Article number	**6GT2600-5AH00**
Product type designation	MDS D526 transponder
Suitability for operation	RF200
Wireless frequencies	
Operating frequency Rated value	13.56 MHz
Electrical data	
Range maximum	400 mm; range is reader dependent: observe
http://support.automation.siemens.com/WW/view/en/67384964	
Protocol with radio transmission	ISO 15693
Transfer rate with radio transmission maximum	26.5 kbit/s
Product feature multitag-capable	Yes
Product component Backup battery	No
Memory	
Type of memory	FRAM
Storage capacity of the user memory	8 192 byte
Type of memory organization	UID (fixed code) 8 bytes, user memory 8 192 bytes, configuration memory 40 bytes
Number of read cycles at ambient temperature < 40 °C maximum	1 000 000 000 000
Number of write cycles at ambient temperature < 40 °C maximum	1 000 000 000 000
Data retention time at ambient temperature < 40 °C not less than	10 y
Property of memory	Block-by-block write protection of the user memory
Type of transponder chip used	Fujitsu MB89R112
Mechanical data	
Material	PA6.6 GF
Color	black
Tightening torque of the screw for securing the equipment maximum	1 Nm
Mounting distance relating to metal surfaces recommended minimum	25 mm
Permitted ambient conditions	
Ambient temperature	
• during read/write access	-25 ... +85 °C
• outside the read/write area	-40 ... +100 °C
• during storage	-40 ... +100 °C
Protection class IP	IP68
Shock resistance	According to DIN EN 60721-3-7 Class 7 M3
Shock acceleration	500 m/s²
Vibrational acceleration	200 m/s²
Design, dimensions and weight	
Height	3.6 mm
Diameter	50 mm
Net weight	13 g
Mounting type	M4 screw
Product properties, functions, components general	
Product feature	
• printable	No
Standards, specifications, approvals	
MTBF	228 y
Accessories	
Accessories	Mounting support and spacer

© Siemens AG 2016

Selection and ordering data

	Article No.
MDS D526 transponder 8 192 byte FRAM Ordering quantity 50 units or a multiple thereof.	**6GT2600-5AH00**
Accessories	
Mounting support and spacer For MDS D526, necessary for mounting onto metal surfaces. Diameter = 60 mm, height = 30 mm Ordering quantity 50 units or a multiple thereof.	**6GT2690-0AL00**

Dimensional drawings

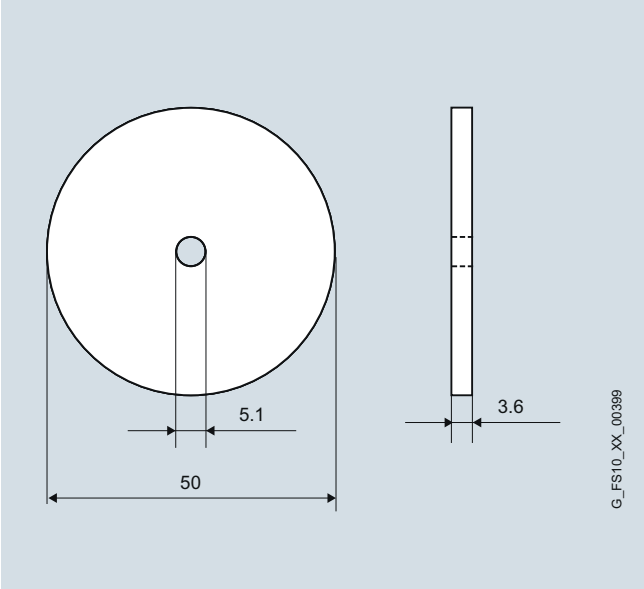

MDS D526 transponder

© Siemens AG 2016

2

Overview

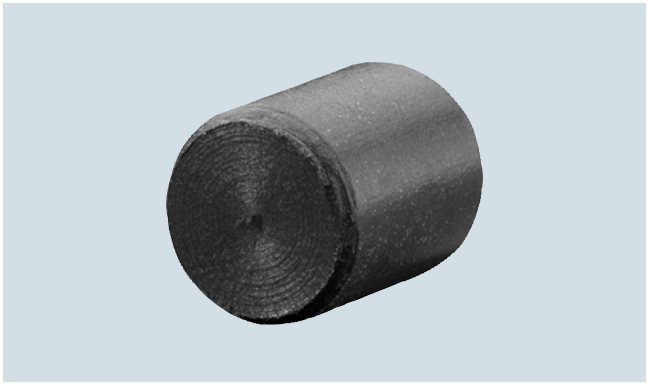

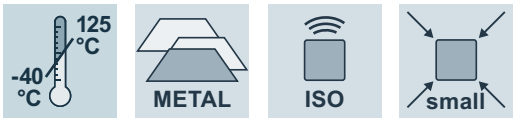

The MDS D117 is a passive, maintenance-free transponder based on ISO 15693. It is small and compact and can be mounted on metal using adhesive.

The mobile data memory can be operated with the SIMATIC RF300 (ISO mode) and SIMATIC RF200 RFID systems. When operated with the RF350M mobile handheld terminal, an external antenna must be used.

Application

For direct identification of small metallic workpieces and workpiece holders.

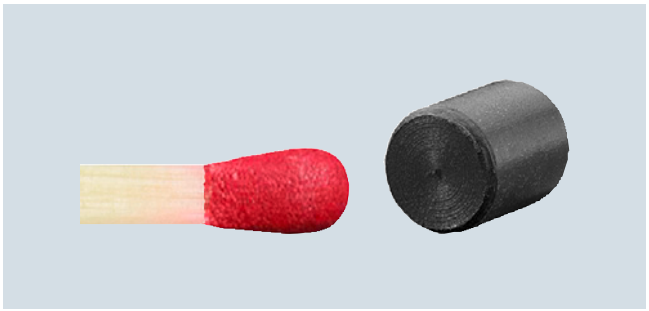

Size comparison of match to MDS D117

Technical specifications

Article number	**6GT2600-0AG00**
Product type designation	MDS D117 transponder
Suitability for operation	RF200, RF300
Wireless frequencies	
Operating frequency Rated value	13.56 MHz
Electrical data	
Range maximum	4 mm; range is reader dependent: observe
http://support.automation.siemens.com/WW/view/en/67384964	
Protocol with radio transmission	ISO 15693
Transfer rate with radio transmission maximum	26.5 kbit/s
Product feature multitag-capable	Yes
Product component Backup battery	No
Memory	
Type of memory	EEPROM
Storage capacity of the user memory	112 byte
Type of memory organization	UID (fixed code) 8 bytes, user memory 112 bytes, configuration memory 8 bytes
Number of read cycles at ambient temperature < 40 °C maximum	100 000 000 000 000
Number of write cycles at ambient temperature < 40 °C maximum	1 000 000
Data retention time at ambient temperature < 40 °C not less than	10 y
Property of memory	Block-by-block write protection of the user memory
Type of transponder chip used	NXP I-Code SLI
Mechanical data	
Material	PPS
Color	black
Mounting distance relating to metal surfaces recommended minimum	0 mm
Permitted ambient conditions	
Ambient temperature	
• during read/write access	-25 ... +85 °C
• outside the read/write area	-40 ... +125 °C
• during storage	-40 ... +125 °C
Protection class IP	IP68 / IPx9K
Shock resistance	According to DIN EN 60721-3-7 Class 7 M3
Shock acceleration	1 000 m/s²
Vibrational acceleration	200 m/s²
Design, dimensions and weight	
Height	5.2 mm
Diameter	4 mm
Net weight	1 g
Mounting type	gluing
Product properties, functions, components general	
Product feature	
• printable	No
Standards, specifications, approvals	
MTBF	228 y

© Siemens AG 2016

Selection and ordering data

	Article No.
MDS D117 transponder 112 bytes EEPROM Ordering quantity 10 units or a multiple thereof.	**6GT2600-0AG00**

Dimensional drawings

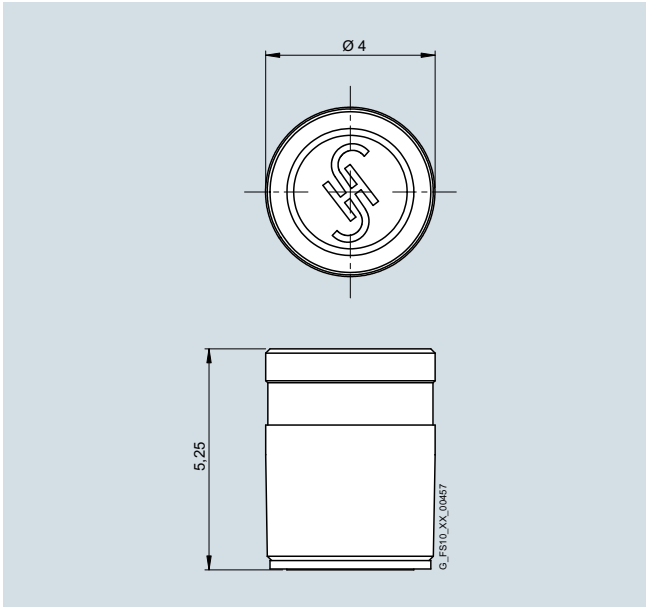

MDS D117 transponder

© Siemens AG 2016

2

Overview

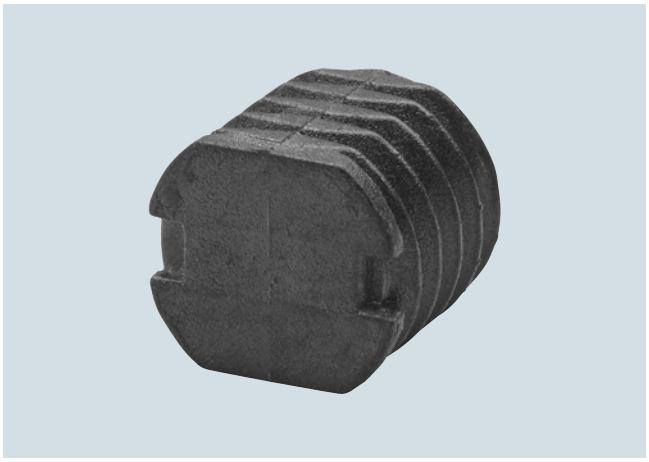

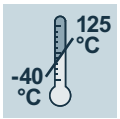

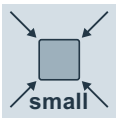

The MDS D127 is a passive, maintenance-free transponder based on ISO 15693. It is small and compact and can be screwed into metal.

The mobile data memory can only be operated with the SIMATIC RF300 (ISO mode) and SIMATIC RF200 RFID systems. When operated with the RF350M mobile handheld terminal, an external antenna must be used.

Application

For direct identification of small metallic workpieces, workpiece holders, or containers.

Technical specifications

Article number	**6GT2600-0AF00**
Product type designation	MDS D127 transponder
Suitability for operation	RF200, RF300
Wireless frequencies	
Operating frequency Rated value	13.56 MHz
Electrical data	
Range maximum	5 mm; range is reader dependent: observe
http://support.automation.siemens.com/WW/view/en/67384964	
Protocol with radio transmission	ISO 15693
Transfer rate with radio transmission maximum	26.5 kbit/s
Product feature multitag-capable	Yes
Product component Backup battery	No
Memory	
Type of memory	EEPROM
Storage capacity of the user memory	112 byte
Type of memory organization	UID (fixed code) 8 bytes, user memory 112 bytes, configuration memory 8 bytes
Number of read cycles at ambient temperature < 40 °C maximum	100 000 000 000 000
Number of write cycles at ambient temperature < 40 °C maximum	1 000 000
Data retention time at ambient temperature < 40 °C not less than	10 y
Property of memory	Block-by-block write protection of the user memory
Type of transponder chip used	NXP I-Code SLI
Mechanical data	
Material	PA6
Color	black
Mounting distance relating to metal surfaces recommended minimum	0 mm
Permitted ambient conditions	
Ambient temperature	
• during read/write access	-25 ... +100 °C
• outside the read/write area	-40 ... +125 °C
• during storage	-40 ... +125 °C
Protection class IP	IP68 / IPx9K
Shock resistance	According to DIN EN 60721-3-7 Class 7 M3
Shock acceleration	1 000 m/s²
Vibrational acceleration	200 m/s²
Design, dimensions and weight	
Height	5.8 mm
Diameter	6 mm
Net weight	1 g
Mounting type	gluing, screwing
Product properties, functions, components general	
Product feature	
• printable	No
Standards, specifications, approvals	
MTBF	228 y

© Siemens AG 2016

Selection and ordering data

	Article No.
MDS 127 transponder 112 bytes EEPROM Ordering quantity 10 units or a multiple thereof.	**6GT2600-0AF00**

Dimensional drawings

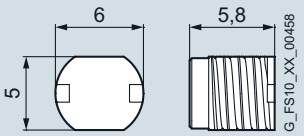

MDS D127 transponder

© Siemens AG 2016

2

Overview

The MDS D428 is a passive (maintenance-free) transponder based on ISO 15693, with FRAM technology.

The MDS D428 can be used for the RFID system MOBY D as well as for SIMATIC RF200 and SIMATIC RF300 (ISO mode).

Application

The MDS D428 is a compact and rugged ISO transponder suitable for screw mounting.

It has been designed for applications in assembly and production lines in the powertrain sector.

Technical specifications

Article number	**6GT2600-4AK00-0AX0**
Product type designation	MDS D428 transponder
Suitability for operation	RF200, RF300, MOBY D
Wireless frequencies	
Operating frequency Rated value	13.56 MHz
Electrical data	
Range maximum	160 mm; range is reader dependent: observe
http://support.automation.siemens.com/WW/view/en/67384964	
Protocol with radio transmission	ISO 15693
Transfer rate with radio transmission maximum	26.5 kbit/s
Product feature multitag-capable	Yes
Product component Backup battery	No
Memory	
Type of memory	FRAM
Storage capacity of the user memory	2 000 byte
Type of memory organization	UID (fixed code) 8 bytes, user memory 2 000 bytes, configuration memory 40 bytes
Number of read cycles at ambient temperature < 40 °C maximum	1 000 000 000 000
Number of write cycles at ambient temperature < 40 °C maximum	1 000 000 000 000
Data retention time at ambient temperature < 40 °C not less than	10 y
Property of memory	Block-by-block write protection of the user memory
Type of transponder chip used	Fujitsu MB89R118
Mechanical data	
Material	PA6.6 GF / stainless steel
Color	black / silver
Tightening torque of the screw for securing the equipment maximum	6 Nm
Mounting distance relating to metal surfaces recommended minimum	0 mm
Permitted ambient conditions	
Ambient temperature	
• during read/write access	-25 ... +85 °C
• outside the read/write area	-40 ... +125 °C
• during storage	-40 ... +125 °C
Protection class IP	IP68 / IPx9K
Shock resistance	According to DIN EN 60721-3-7 Class 7 M3
Shock acceleration	500 m/s²
Vibrational acceleration	200 m/s²
Design, dimensions and weight	
Height	20 mm
Diameter	24 mm
Net weight	35 g
Mounting type	screwing (M8)
Product properties, functions, components general	
Product feature	
• silicon-free	Yes
• printable	No

© Siemens AG 2016

Selection and ordering data

	Article No.
MDS D428 transponder 2 000 bytes FRAM With surface protection plate to prevent scratching of the screw-in surface. Ordering quantity 5 units or a multiple thereof.	**6GT2600-4AK00-0AX0**

Dimensional drawings

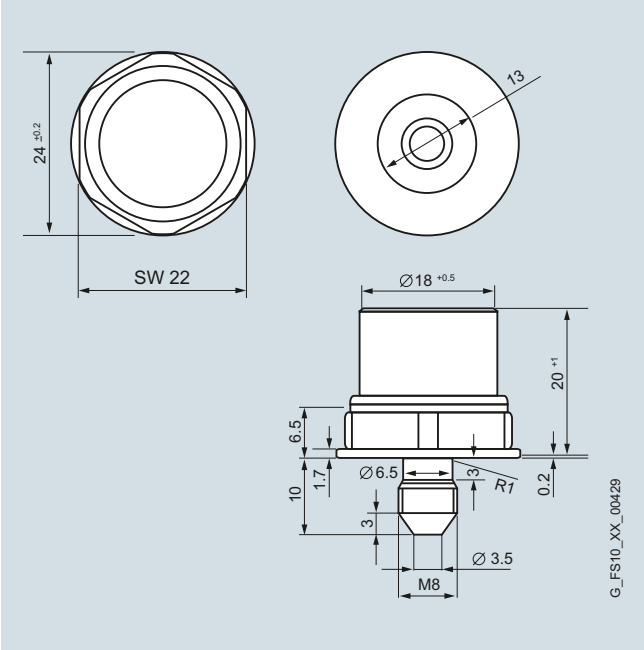

MDS D428 transponder

© Siemens AG 2016

2

Overview

The MDS D528 is a passive (maintenance-free) transponder based on ISO 15693, with FRAM technology.

The transponder can only be operated with the SIMATIC RF200 RFID system.

Application

The MDS D528 is a compact and rugged ISO transponder suitable for screw mounting.

It is designed for use in assembly and production lines as well as in the powertrain sector.

Technical specifications

Article number	**6GT2600-5AK00**
Product type designation	MDS D528 transponder
Suitability for operation	RF200
Wireless frequencies	
Operating frequency Rated value	13.56 MHz
Electrical data	
Range maximum	160 mm; range is reader dependent: observe
http://support.automation.siemens.com/WW/view/en/67384964	
Protocol with radio transmission	ISO 15693
Transfer rate with radio transmission maximum	26.5 kbit/s
Product feature multitag-capable	Yes
Product component Backup battery	No
Memory	
Type of memory	FRAM
Storage capacity of the user memory	8 192 byte
Type of memory organization	UID (fixed code) 8 bytes, user memory 8 192 bytes, configuration memory 40 bytes
Number of read cycles at ambient temperature < 40 °C maximum	1 000 000 000 000
Number of write cycles at ambient temperature < 40 °C maximum	1 000 000 000 000
Data retention time at ambient temperature < 40 °C not less than	10 y
Property of memory	Block-by-block write protection of the user memory
Type of transponder chip used	Fujitsu MB89R112
Mechanical data	
Material	PA6.6 GF / stainless steel
Color	black / silver
Tightening torque of the screw for securing the equipment maximum	6 Nm
Mounting distance relating to metal surfaces recommended minimum	0 mm
Permitted ambient conditions	
Ambient temperature	
• during read/write access	-25 ... +85 °C
• outside the read/write area	-40 ... +125 °C
• during storage	-40 ... +125 °C
Protection class IP	IP68 / IPx9K
Shock resistance	According to DIN EN 60721-3-7 Class 7 M3
Shock acceleration	500 m/s²
Vibrational acceleration	200 m/s²
Design, dimensions and weight	
Height	20 mm
Diameter	18 mm
Net weight	35 g
Mounting type	screwing (M8)
Product properties, functions, components general	
Product feature	
• silicon-free	Yes
• printable	No

© Siemens AG 2016

Selection and ordering data

	Article No.
MDS D528 transponder 8 192 bytes of FRAM user memory With surface protection plate to prevent scratching of the screw-in surface. Ordering quantity 5 units or a multiple thereof.	**6GT2600-5AK00**

Dimensional drawings

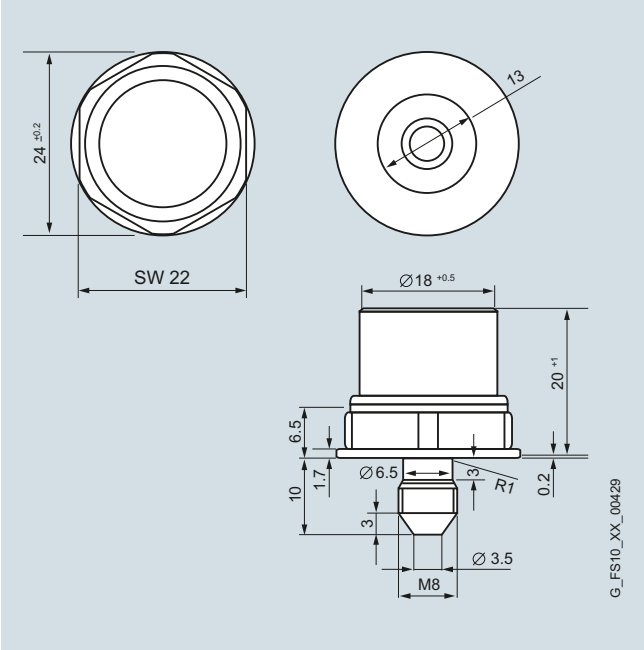

MDS D528 transponder

© Siemens AG 2016

MDS D139

2

Overview

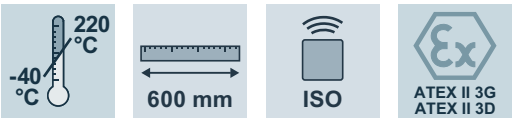

The MDS D139 is a passive (maintenance-free), heat-resistant transponder based on the ISO 15693 standard.

The MDS D139 can be used both for the MOBY D RFID system as well as for SIMATIC RF200 and SIMATIC RF300 (ISO mode).

Application

Applications in production logistics and in assembly lines subject to high temperatures (up to +200 °C, e.g. in a paint shop).

Technical specifications

Article number	**6GT2600-0AA10**
Product type designation	MDS D139 transponder
Suitability for operation	RF200, RF300, MOBY D
Wireless frequencies	
Operating frequency Rated value	13.56 MHz
Electrical data	
Range maximum	600 mm; range is reader dependent: observe
http://support.automation.siemens.com/WW/view/en/67384964	
Protocol with radio transmission	ISO 15693
Transfer rate with radio transmission maximum	26.5 kbit/s
Product feature multitag-capable	Yes
Product component Backup battery	No

Article number	**6GT2600-0AA10**
Product type designation	MDS D139 transponder
Suitability for operation	RF200, RF300, MOBY D
Memory	
Type of memory	EEPROM
Storage capacity of the user memory	112 byte
Type of memory organization	UID (fixed code) 8 bytes, user memory 112 bytes, configuration memory 8 bytes
Number of read cycles at ambient temperature < 40 °C maximum	100 000 000 000 000
Number of write cycles at ambient temperature < 40 °C maximum	1 000 000
Data retention time at ambient temperature < 40 °C not less than	10 y
Property of memory	Block-by-block write protection of the user memory
Type of transponder chip used	NXP I-Code SLI
Mechanical data	
Material	PPS
Color	black
Tightening torque of the screw for securing the equipment maximum	1.5 Nm
Mounting distance relating to metal surfaces recommended minimum	30 mm
Permitted ambient conditions	
Ambient temperature	
• during read/write access	-25 ... +100 °C
• outside the read/write area	-40 ... +220 °C
• during storage	-40 ... +100 °C
Ambient condition for operation	Operating temperature permanent up to 100 °C, at 220 °C: up to 2 000 hours or 1 500 temperature cycles, at 200 °C: up to 5 000 hours or 3 000 temperature cycles
Protection class IP	IP68 / IPx9K
Shock resistance	According to DIN EN 60721-3-7 Class 7 M3
Shock acceleration	500 m/s²
Vibrational acceleration	200 m/s²
Design, dimensions and weight	
Height	15 mm
Diameter	85 mm
Net weight	50 g
Mounting type	M5 screw
Product properties, functions, components general	
Product feature	
• silicon-free	Yes
• printable	No
Standards, specifications, approvals	
Certificate of suitability	Ex: II 3 G Ex nA II T2, II 3 D Ex tD A22 IP68 T 210°C
MTBF	228 y
Accessories	
Accessories	Spacer, quick-change holder

© Siemens AG 2016

Selection and ordering data

	Article No.
MDS D139 transponder 112 bytes EEPROM Ordering quantity 10 units or a multiple thereof.	**6GT2600-0AA10**
Accessories	
Spacer Necessary for mounting onto metal surfaces. Ordering quantity 10 units or a multiple thereof. 	**6GT2690-0AA00**
Quick change holder For MDS D139, stainless steel, diameter = 22 mm, height = 48 mm. Fixing with M8 nut. Ordering quantity 10 units or a multiple thereof. 	**6GT2690-0AH00**
Quick change holder For MDS D139, stainless steel, diameter = 22 mm, height = 48 mm. With M10 female thread Ordering quantity 10 units or a multiple thereof. 	**6GT2690-0AH10**

Dimensional drawings

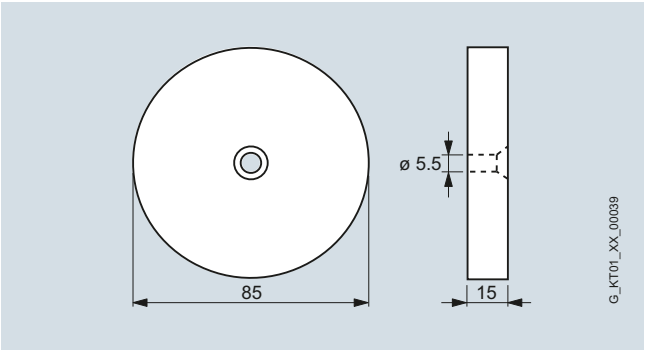

MDS D139 transponder

© Siemens AG 2016

MDS D339

2

Overview

The MDS D339 is a passive (maintenance-free), heat-resistant transponder based on ISO 15693.

The MDS D339 can be used for the RFID system MOBY D as well as for SIMATIC RF200 and SIMATIC RF300 (ISO mode).

Application

Applications in production logistics and in assembly lines subject to high temperatures (up to +220 °C, e.g. in a paint shop).

Technical specifications

Article number	**6GT2600-3AA10**
Product type designation	MDS D339 transponder
Suitability for operation	RF200, RF300, MOBY D
Wireless frequencies	
Operating frequency Rated value	13.56 MHz
Electrical data	
Range maximum	480 mm; range is reader dependent: observe
http://support.automation.siemens.com/WW/view/en/67384964	
Protocol with radio transmission	ISO 15693
Transfer rate with radio transmission maximum	26.5 kbit/s
Product feature multitag-capable	Yes
Product component Backup battery	No

Article number	**6GT2600-3AA10**
Product type designation	MDS D339 transponder
Suitability for operation	RF200, RF300, MOBY D
Memory	
Type of memory	EEPROM
Storage capacity of the user memory	992 byte
Type of memory organization	UID (fixed code) 8 bytes, user memory 992 bytes, configuration memory 24 bytes
Number of read cycles at ambient temperature < 40 °C maximum	100 000 000 000 000
Number of write cycles at ambient temperature < 40 °C maximum	1 000 000
Data retention time at ambient temperature < 40 °C not less than	10 y
Property of memory	Block-by-block write protection of the user memory
Type of transponder chip used	Infineon My-D SRF 55V10P
Mechanical data	
Material	PPS
Color	black
Tightening torque of the screw for securing the equipment maximum	1.5 Nm
Mounting distance relating to metal surfaces recommended minimum	30 mm
Permitted ambient conditions	
Ambient temperature	
• during read/write access	-25 ... +100 °C
• outside the read/write area	-40 ... +220 °C
• during storage	-40 ... +100 °C
Ambient condition for operation	Operating temperature permanent up to 100 °C, at 220 °C: up to 2 000 hours or 1 500 temperature cycles, at 200 °C: up to 5 000 hours or 3 000 temperature cycles
Protection class IP	IP68 / IPx9K
Shock resistance	According to DIN EN 60721-3-7 Class 7 M3
Shock acceleration	500 m/s²
Vibrational acceleration	200 m/s²
Design, dimensions and weight	
Height	15 mm
Diameter	85 mm
Net weight	50 g
Mounting type	M5 screw
Product properties, functions, components general	
Product feature	
• silicon-free	Yes
• printable	No
Standards, specifications, approvals	
Certificate of suitability	Ex: II 3 G Ex nA II T2, II 3 D Ex tD A22 IP68 T 210°C
MTBF	228 y
Accessories	
Accessories	Spacer, quick-change holder

© Siemens AG 2016

Selection and ordering data

	Article No.
MDS D339 transponder 992 bytes EEPROM Ordering quantity 10 units or a multiple thereof.	**6GT2600-3AA10**
Accessories	
Spacer Necessary for mounting onto metal surfaces. Ordering quantity 10 units or a multiple thereof. 	**6GT2690-0AA00**
Quick change holder For MDS D339, stainless steel, diameter = 22 mm, height = 48 mm. Fixing with M8 nut. Ordering quantity 10 units or a multiple thereof. 	**6GT2690-0AH00**
Quick change holder For MDS D339, stainless steel, diameter = 22 mm, height = 48 mm. With M10 female thread Ordering quantity 10 units or a multiple thereof 	**6GT2690-0AH10**

Dimensional drawings

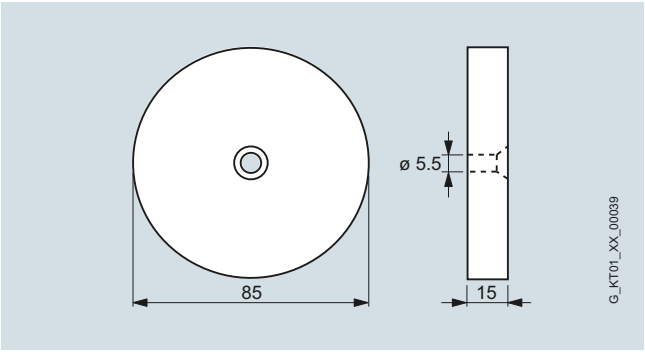

MDS D339 transponder

© Siemens AG 2016

MDS D160

Overview

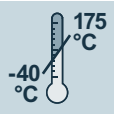

The MDS D160 is a passive, maintenance-free and rugged transponder based on the ISO 15693 standard.

The MDS D160 can be used for the RFID system MOBY D as well as for SIMATIC RF200 and SIMATIC RF300 (ISO mode).

Application

Typical applications are, for example:

- Rented work clothing
- Hotel laundry
- Surgical textiles
- Hospital clothing
- Dirt collection mats
- Clothing for nursing homes/hostels

Technical specifications

Article number	**6GT2600-0AB10**
Product type designation	MDS D160 transponder
Suitability for operation	RF200, RF300, MOBY D
Wireless frequencies	
Operating frequency Rated value	13.56 MHz
Electrical data	
Range maximum	180 mm; range is reader dependent: observe
http://support.automation.siemens.com/WW/view/en/67384964	
Protocol with radio transmission	ISO 15693
Transfer rate with radio transmission maximum	26.5 kbit/s
Product feature multitag-capable	Yes
Product component Backup battery	No
Article number	**6GT2600-0AB10**
Product type designation	MDS D160 transponder
Suitability for operation	RF200, RF300, MOBY D
Memory	
Type of memory	EEPROM
Storage capacity of the user memory	112 byte
Type of memory organization	UID (fixed code) 8 bytes, user memory 112 bytes, configuration memory 8 bytes
Number of read cycles at ambient temperature < 40 °C maximum	100 000 000 000 000
Number of write cycles at ambient temperature < 40 °C maximum	1 000 000
Data retention time at ambient temperature < 40 °C not less than	10 y
Property of memory	Block-by-block write protection of the user memory
Type of transponder chip used	NXP I-Code SLI
Mechanical data	
Material	PPS
Color	beige
Mounting distance relating to metal surfaces recommended minimum	10 mm
Permitted ambient conditions	
Ambient temperature	
• during read/write access	-25 ... +85 °C
• outside the read/write area	-40 ... +175 °C
• during storage	-25 ... +100 °C
Ambient condition for operation	Operating temperature permanent up to 100 °C, up to 175 °C min. 100 washing cycles, one time up to 220 °C for 30 s
Protection class IP	IP68 / IPx9K
Shock resistance	According to DIN EN 60721-3-7 Class 7 M3
Shock acceleration	400 m/s²
Vibrational acceleration	100 m/s²
Design, dimensions and weight	
Height	3 mm
Diameter	16 mm
Net weight	1.2 g
Mounting type	patch, sewing, gluing
Product properties, functions, components general	
Product feature	
• printable	No
Standards, specifications, approvals	
MTBF	228 y
Accessories	
Accessories	Mounting support and spacer

© Siemens AG 2016

Selection and ordering data

	Article No.
MDS D160 transponder 112 bytes EEPROM Ordering quantity 100 units or a multiple thereof.	**6GT2600-0AB10**
Accessories	
Spacer for MDS D160 For MDS D160, necessary for mounting onto metal surfaces. Diameter = 20 mm, height = 15 mm. Ordering quantity 50 units or a multiple thereof.	**6GT2690-0AG00**

Dimensional drawings

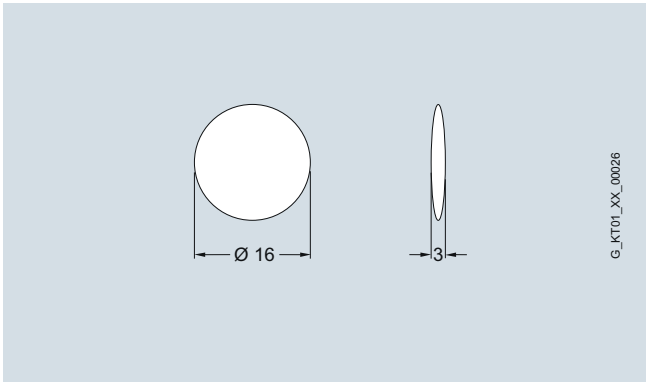

MDS D160 transponder

© Siemens AG 2016

2

Overview

The MDS D460 is a passive (maintenance-free) transponder based on ISO 15693, with FRAM technology.

The MDS D460 can be used for the RFID system MOBY D as well as for SIMATIC RF200 and SIMATIC RF300 (ISO mode).

Application

The MDS D460 has been designed for identification tasks in small assembly lines.

Technical specifications

Article number	**6GT2600-4AB00**
Product type designation	MDS D460 transponder
Suitability for operation	RF200, RF300, MOBY D
Wireless frequencies	
Operating frequency Rated value	13.56 MHz
Electrical data	
Range maximum	160 mm; range is reader dependent: observe
http://support.automation.siemens.com/WW/view/en/67384964	
Protocol with radio transmission	ISO 15693
Transfer rate with radio transmission maximum	26.5 kbit/s
Product feature multitag-capable	Yes
Product component Backup battery	No
Memory	
Type of memory	FRAM
Storage capacity of the user memory	2 000 byte
Type of memory organization	UID (fixed code) 8 bytes, user memory 2 000 bytes, configuration memory 40 bytes
Number of read cycles at ambient temperature < 40 °C maximum	1 000 000 000 000
Number of write cycles at ambient temperature < 40 °C maximum	1 000 000 000 000
Data retention time at ambient temperature < 40 °C not less than	10 y
Property of memory	Block-by-block write protection of the user memory
Type of transponder chip used	Fujitsu MB89R118
Mechanical data	
Material	Epoxy resin
Color	black
Mounting distance relating to metal surfaces recommended minimum	10 mm
Permitted ambient conditions	
Ambient temperature	
• during read/write access	-25 ... +85 °C
• outside the read/write area	-40 ... +100 °C
• during storage	-40 ... +100 °C
Protection class IP	IP67 / IPx9K
Shock resistance	According to DIN EN 60721-3-7 Class 7 M3
Shock acceleration	500 m/s²
Vibrational acceleration	200 m/s²
Design, dimensions and weight	
Height	3 mm
Diameter	16 mm
Net weight	3 g
Mounting type	patching, gluing
Product properties, functions, components general	
Product feature	
• printable	No
Standards, specifications, approvals	
MTBF	228 y
Accessories	
Accessories	Mounting support and spacer

© Siemens AG 2016

Selection and ordering data

	Article No.
MDS D460 transponder 2 000 bytes FRAM Ordering quantity 50 units or a multiple thereof.	**6GT2600-4AB00**
Accessories	
Spacer For MDS D460, necessary for mounting onto metal surfaces. Diameter = 20 mm, height = 15 mm Ordering quantity 50 units or a multiple thereof.	**6GT2690-0AG00**

Dimensional drawings

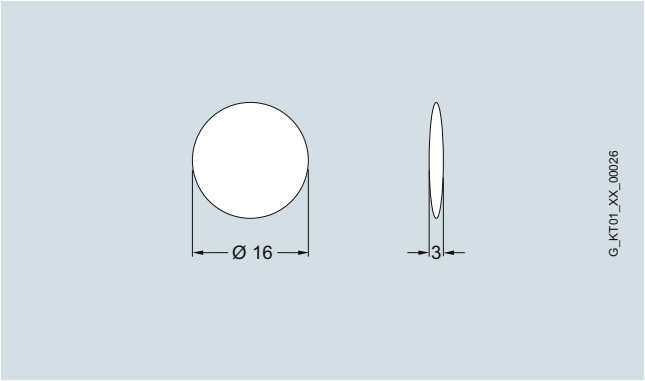

MDS D460 transponder

© Siemens AG 2016

2

Overview

The following RF300 mode transponders can be used with the SIMATIC RF300 RFID system:

Transponder	Features	Page
RF320T	Small, compact, universal transponder. 20 byte EEPROM	2/61
RF330T	Transponder, can be directly flush-mounted on metal. For directly identifying metallic workpieces or containers. 32 KB FRAM	2/63
RF340T	Universal transponder, for mounting directly on metal, e.g. workpiece holders. 8 or 32 KB FRAM	2/65
RF350T	Universal transponder, for mounting directly on metal, suitable for longer ranges. 32 KB FRAM	2/67
RF360T	Universal transponder in credit card format. For mounting onto metal with spacer. 8 or 32 KB FRAM	2/69

Transponder	Features	Page
RF370T	Universal transponder with 32 KB or 64 KB memory, for mounting directly on metal, suitable for longer ranges.	2/71
RF380T	Heat-resistant transponder, designed for skid identification in paint shops, for mounting directly on metal. Temperature range to +220 °C. 32 KB FRAM	2/73

Benefits

get Designed for Industry

The comprehensive portfolio of SIMATIC RF300 transponders offers the right solution for every requirement in production:

- For high-performance applications.
- Large memory up to 64 KB.
- IP68 / IPx9K degree of protection.
- Extremely rugged transponder for high temperature ranges up to 220 degrees with ATEX approval for use in paint shops.
- Customized solutions for SmartLabels and transponders on request.

Technical specifications

Field data (operating/limit distance) of transponders and readers (all specifications in mm)

The field data (unaffected by metal) of the RF300 transponders in connection with RF300 readers is listed in the technical specifications of the RFID overview. The listed technical data are typical values and are valid for a room temperature of +25 °C.

For detailed descriptions and ordering data of these RF300 transponders: Refer to the following product nodes.

© Siemens AG 2016

Overview

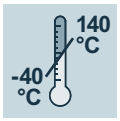

Universal, compact transponder (20 bytes EEPROM + 4 bytes serial number) in button format. Dimensions Ø x H (mm): 27 x 4.

Technical specifications

Article number	**6GT2800-1CA00**
Product type designation	RF320T transponder
Suitability for operation	RF300
Wireless frequencies	
Operating frequency Rated value	13.56 MHz
Electrical data	
Range maximum	60 mm; range is reader dependent: observe
http://support.automation.siemens.com/WW/view/en/67384964	
Protocol with radio transmission	RF300-specific
Transfer rate with radio transmission maximum	106 kbit/s
Product feature multitag-capable	Yes
Product component Backup battery	No
Memory	
Type of memory	EEPROM
Storage capacity of the user memory	20 byte
Type of memory organization	UID (fixed code) 4 bytes, user memory 20 bytes,
Number of read cycles at ambient temperature < 40 °C maximum	100 000 000 000 000
Number of write cycles at ambient temperature < 40 °C maximum	1 000 000
Data retention time at ambient temperature < 40 °C not less than	10 y
Property of memory	Block-by-block write protection of the user memory
Mechanical data	
Material	Epoxy resin
Color	black
Mounting distance relating to metal surfaces recommended minimum	20 mm

Article number	**6GT2800-1CA00**
Product type designation	RF320T transponder
Suitability for operation	RF300
Permitted ambient conditions	
Ambient temperature	
• during read/write access	-25 ... +125 °C
• outside the read/write area	-40 ... +140 °C
• during storage	-40 ... +140 °C
Protection class IP	IP67 / IPx9K
Shock resistance	According to DIN EN 60721-3-7 Class 7 M3
Shock acceleration	1 000 m/s²
Vibrational acceleration	200 m/s²
Design, dimensions and weight	
Height	4 mm
Diameter	27 mm
Net weight	5 g
Mounting type	M3 screw, gluing
Product properties, functions, components general	
Product feature	
• silicon-free	Yes
• printable	No
Standards, specifications, approvals	
MTBF	1 800 y
Accessories	
Accessories	Mounting support and spacer

© Siemens AG 2016

2

Selection and ordering data

	Article No.
SIMATIC RF320T transponder 20 bytes EEPROM Ordering quantity 20 units or a multiple thereof.	**6GT2800-1CA00**
Accessories	
Spacer For MDS D124, MDS D324, MDS D424, MDS D524 and RF320T. Necessary for mounting onto metal surfaces. Diameter = 35 mm, height = 15 mm. Ordering quantity 20 units or a multiple thereof.	**6GT2690-0AK00**

Dimensional drawings

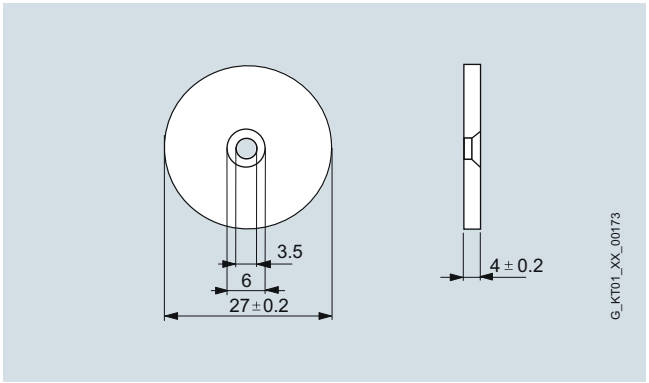

SIMATIC RF320T transponder

© Siemens AG 2016

Overview

The SIMATIC RF330T is a universal transponder. This compact transponder can be flush-mounted in and on metal. It is thus suitable for directly identifying metallic workpiece holders, workpieces or containers. Thanks to its high IP68/IPx9K degree of protection, it is suitable for use in particularly harsh environments such as the passage through washers.

Technical specifications

Article number	**6GT2800-5BA00**
Product type designation	RF330T transponder
Suitability for operation	RF300
Wireless frequencies	
Operating frequency Rated value	13.56 MHz
Electrical data	
Range maximum	52 mm; range is reader dependent: observe
http://support.automation.siemens.com/WW/view/en/67384964	
Protocol with radio transmission	RF300-specific
Transfer rate with radio transmission maximum	106 kbit/s
Product feature multitag-capable	Yes
Product component Backup battery	No
Memory	
Type of memory	FRAM/EEPROM
Storage capacity of the user memory	32 765 byte
Type of memory organization	UID (fixed code) 4 bytes, user memory 32 765 bytes, OTP memory 20 bytes
Number of read cycles at ambient temperature < 40 °C maximum	10 000 000 000
Number of write cycles at ambient temperature < 40 °C maximum	10 000 000 000
Data retention time at ambient temperature < 40 °C not less than	10 y
Property of memory	Block-by-block write protection of the OTP memory

Article number	**6GT2800-5BA00**
Product type designation	RF330T transponder
Suitability for operation	RF300
Mechanical data	
Material	PPS
Color	black
Tightening torque of the screw for securing the equipment maximum	1.2 Nm
Mounting distance relating to metal surfaces recommended minimum	0 mm
Permitted ambient conditions	
Ambient temperature	
• during read/write access	-25 ... +85 °C
• outside the read/write area	-40 ... +100 °C
• during storage	-40 ... +100 °C
Protection class IP	IP68 / IPx9K
Shock resistance	According to DIN EN 60721-3-7 Class 7 M3
Shock acceleration	500 m/s²
Vibrational acceleration	200 m/s²
Design, dimensions and weight	
Height	8 mm
Diameter	30 mm
Net weight	15 g
Mounting type	M4 countersunk screw
Product properties, functions, components general	
Product feature	
• silicon-free	Yes
• printable	No
Standards, specifications, approvals	
MTBF	1 200 y
Accessories	
Accessories	mounting hood

© Siemens AG 2016

Selection and ordering data

	Article No.
SIMATIC RF330T transponder 32 KB FRAM Ordering quantity 10 units or a multiple thereof.	**6GT2800-5BA00**
Accessories	
Mounting cover Length = 50 mm, height = 10 mm, temperature range up to 100 °C, ordering quantity 10 units or a multiple thereof.	**6GT2690-0AE00**

Dimensional drawings

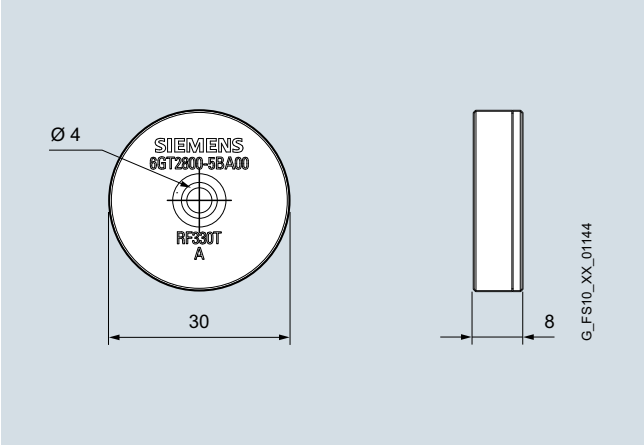

SIMATIC RF330T transponder

© Siemens AG 2016

Overview

Universal transponder, especially suitable for small workpiece holders. The transponder can be mounted directly onto metal surfaces.

6GT2800-4BB00

6GT2800-5BB00

Technical specifications

Article number	**6GT2800-4BB00**	**6GT2800-5BB00**
Product type designation	RF340T transponder	RF340T transponder
Suitability for operation	RF300	RF300
Wireless frequencies		
Operating frequency Rated value	13.56 MHz	13.56 MHz
Electrical data		
Range maximum	105 mm; range is reader dependent: observe http://support.automation.siemens.com/WW/view/en/67384964	
Protocol with radio transmission	RF300-specific	RF300-specific
Transfer rate with radio transmission maximum	106 kbit/s	106 kbit/s
Product feature multitag-capable	Yes	Yes
Product component Backup battery	No	No
Memory		
Type of memory	FRAM/EEPROM	FRAM/EEPROM
Storage capacity of the user memory	8 189 byte	32 765 byte
Type of memory organization	UID (fixed code) 4 bytes, user memory 8 189 bytes, OTP memory 20 bytes	UID (fixed code) 4 bytes, user memory 32 765 bytes, OTP memory 20 bytes
Number of read cycles at ambient temperature < 40 °C maximum	10 000 000 000	10 000 000 000
Number of write cycles at ambient temperature < 40 °C maximum	10 000 000 000	10 000 000 000
Data retention time at ambient temperature < 40 °C not less than	10 y	10 y
Property of memory	Block-by-block write protection of the OTP memory	Block-by-block write protection of the OTP memory

© Siemens AG 2016

RF340T

Article number	**6GT2800-4BB00**	**6GT2800-5BB00**
Product type designation	RF340T transponder	RF340T transponder
Suitability for operation	RF300	RF300
Mechanical data		
Material	PA12	PA12
Color	anthracite	anthracite
Mounting distance relating to metal surfaces recommended minimum	0 mm	0 mm
Permitted ambient conditions		
Ambient temperature		
• during read/write access	-25 ... +85 °C	-25 ... +85 °C
• outside the read/write area	-40 ... +85 °C	-40 ... +85 °C
• during storage	-40 ... +85 °C	-40 ... +85 °C
Protection class IP	IP67 / IPx9K	IP67 / IPx9K
Shock resistance	According to DIN EN 60721-3-7 Class 7 M3	According to DIN EN 60721-3-7 Class 7 M3
Shock acceleration	500 m/s^2	500 m/s^2
Vibrational acceleration	200 m/s^2	200 m/s^2
Design, dimensions and weight		
Width	25 mm	25 mm
Height	15 mm	15 mm
Depth	48 mm	48 mm
Net weight	25 g	25 g
Mounting type	2 x M3 screws	2 x M3 screws
Product properties, functions, components general		
Product feature		
• silicon-free	Yes	Yes
• printable	No	No
Standards, specifications, approvals		
MTBF	1 200 y	1 200 y

Selection and ordering data

	Article No.
SIMATIC RF340T transponder	
• 8 KB FRAM Ordering quantity 5 units or a multiple thereof.	**6GT2800-4BB00**
• 32 KB FRAM Order quantity 5 units or a multiple thereof.	**6GT2800-5BB00**

Dimensional drawings

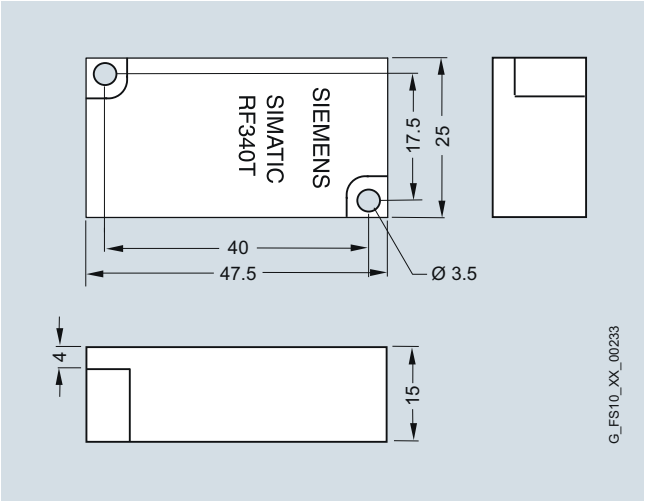

SIMATIC RF340T transponder

© Siemens AG 2016

Overview

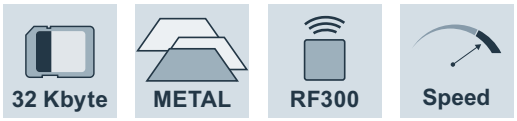

Universal transponder. The transponder can be mounted directly onto metal surfaces.

Technical specifications

Article number	**6GT2800-5BD00**
Product type designation	RF350T transponder
Suitability for operation	RF300
Wireless frequencies	
Operating frequency Rated value	13.56 MHz
Electrical data	
Range maximum	125 mm; range is reader dependent: observe
http://support.automation.siemens.com/WW/view/en/67384964	
Protocol with radio transmission	RF300-specific
Transfer rate with radio transmission maximum	106 kbit/s
Product feature multitag-capable	Yes
Product component Backup battery	No
Memory	
Type of memory	FRAM/EEPROM
Storage capacity of the user memory	32 765 byte
Type of memory organization	UID (fixed code) 4 bytes, user memory 32 765 bytes, OTP memory 20 bytes
Number of read cycles at ambient temperature < 40 °C maximum	10 000 000 000
Number of write cycles at ambient temperature < 40 °C maximum	10 000 000 000
Data retention time at ambient temperature < 40 °C not less than	10 y
Property of memory	Block-by-block write protection of the OTP memory

Article number	**6GT2800-5BD00**
Product type designation	RF350T transponder
Suitability for operation	RF300
Mechanical data	
Material	PA12
Color	anthracite
Mounting distance relating to metal surfaces recommended minimum	0 mm
Permitted ambient conditions	
Ambient temperature	
• during read/write access	-25 ... +85 °C
• outside the read/write area	-40 ... +85 °C
• during storage	-40 ... +85 °C
Protection class IP	IP68
Shock resistance	According to DIN EN 60721-3-7 Class 7 M3
Shock acceleration	500 m/s²
Vibrational acceleration	200 m/s²
Design, dimensions and weight	
Width	50 mm
Height	20 mm
Depth	50 mm
Net weight	25 g
Mounting type	2 x M4 screws
Product properties, functions, components general	
Product feature	
• silicon-free	Yes
• printable	No
Standards, specifications, approvals	
MTBF	1 200 y

Selection and ordering data

	Article No.
SIMATIC RF350T transponder	**6GT2800-5BD00**
32 Kbyte FRAM	

© Siemens AG 2016

2

Dimensional drawings

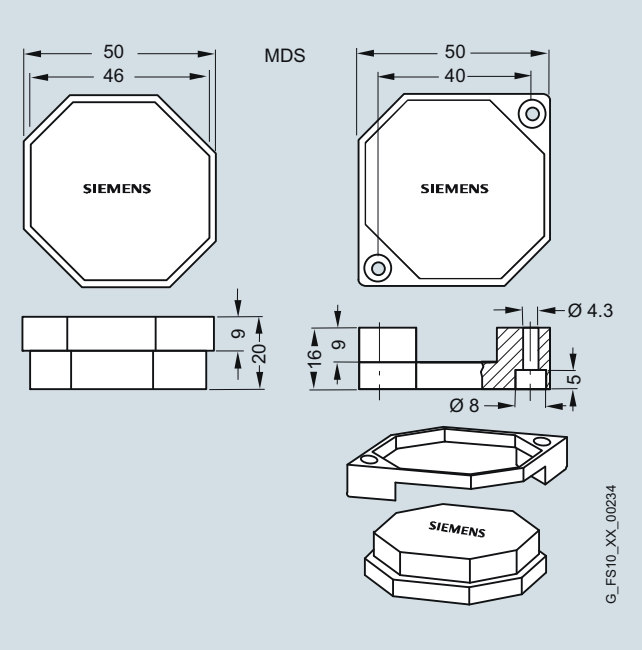

Left: Transponder SIMATIC RF350T.
Top right: Mounting frame.
Lower right: Installation diagram. The transponder can be mounted with the mounting frame as shown.

© Siemens AG 2016

Overview

Universal transponder in credit card format. The transponder can be mounted on metal with spacers.

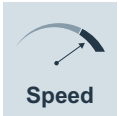

6GT2800-4AC00

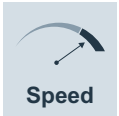

6GT2800-5AC00

Technical specifications

Article number	**6GT2800-4AC00**	**6GT2800-5AC00**
Product type designation	RF360T transponder	RF360T transponder
Suitability for operation	RF300	RF300
Wireless frequencies		
Operating frequency Rated value	13.56 MHz	13.56 MHz
Electrical data		
Range maximum	150 mm; range is reader dependent: observe http://support.automation.siemens.com/WW/view/en/67384964	
Protocol with radio transmission	RF300-specific	RF300-specific
Transfer rate with radio transmission maximum	106 kbit/s	106 kbit/s
Product feature multitag-capable	Yes	Yes
Product component Backup battery	No	No
Memory		
Type of memory	FRAM/EEPROM	FRAM/EEPROM
Storage capacity of the user memory	8 189 byte	32 765 byte
Type of memory organization	UID (fixed code) 4 bytes, user memory 8 189 bytes, OTP memory 20 bytes	UID (fixed code) 4 bytes, user memory 32 765 bytes, OTP memory 20 bytes
Number of read cycles at ambient temperature < 40 °C maximum	10 000 000 000	10 000 000 000
Number of write cycles at ambient temperature < 40 °C maximum	10 000 000 000	10 000 000 000
Data retention time at ambient temperature < 40 °C not less than	10 y	10 y
Property of memory	Block-by-block write protection of the OTP memory	Block-by-block write protection of the OTP memory
Mechanical data		
Material	Epoxy resin	Epoxy resin
Color	anthracite	anthracite
Mounting distance relating to metal surfaces recommended minimum	20 mm	20 mm

© Siemens AG 2016

RF360T

Article number	6GT2800-4AC00	6GT2800-5AC00
Product type designation	RF360T transponder	RF360T transponder
Suitability for operation	RF300	RF300
Permitted ambient conditions		
Ambient temperature		
• during read/write access	-25 ... +75 °C	-25 ... +75 °C
• outside the read/write area	-40 ... +85 °C	-40 ... +85 °C
• during storage	-40 ... +85 °C	-40 ... +85 °C
Protection class IP	IP67	IP67
Shock resistance	According to DIN EN 60721-3-7 Class 7 M3	According to DIN EN 60721-3-7 Class 7 M3
Shock acceleration	500 m/s²	500 m/s²
Vibrational acceleration	200 m/s²	200 m/s²
Resistance to mechanical stress	Continuous torsion and bending stress not permissible	Continuous torsion and bending stress not permissible
Design, dimensions and weight		
Width	55 mm	55 mm
Height	2.5 mm	2.5 mm
Depth	86 mm	86 mm
Net weight	25 g	25 g
Mounting type	2 x M3 screws, mounting bag (see accessories)	2 x M3 screws, mounting bag (see accessories)
Product properties, functions, components general		
Product feature		
• silicon-free	Yes	Yes
• printable	No	No
Standards, specifications, approvals		
MTBF	1 200 y	1 200 y
Accessories	Fixing strap, holder	Fixing strap, holder

Selection and ordering data

	Article No.
SIMATIC RF360T transponder	
• 8 Kbyte FRAM Ordering quantity 10 units or a multiple thereof..	**6GT2800-4AC00**
• 32 Kbyte FRAM Ordering quantity 10 units or a multiple thereof.	**6GT2800-5AC00**
Accessories	
Fixing pocket For SIMATIC RF360T, only usable together with spacer 6GT2190-0AA00. Ordering quantity 50 units or a multiple thereof.	**6GT2190-0AB00**
Spacer For fixing pocket (6GT2190-0AB00), thickness 20 mm. The purpose of the spacer is to maintain the recommended distance to the metal when installing the transponder. Ordering quantity 50 units or a multiple thereof.	**6GT2190-0AA00**

Dimensional drawings

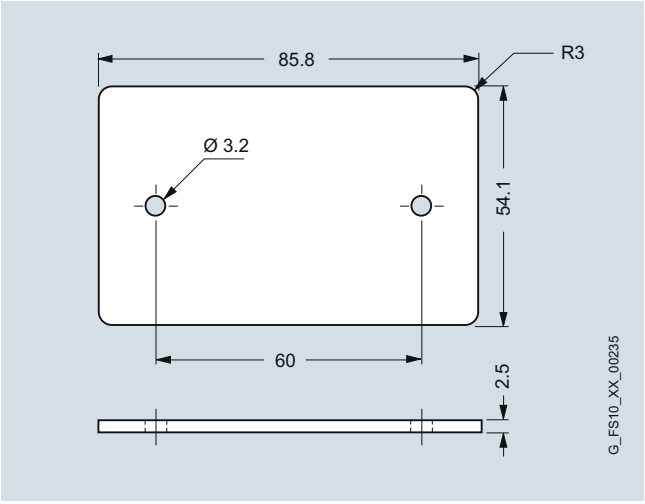

SIMATIC RF360T transponder

© Siemens AG 2016

Overview

Universal transponder in cuboid form The transponder can be mounted directly onto metal surfaces.

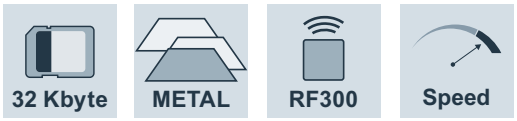

6GT2800-5BE00

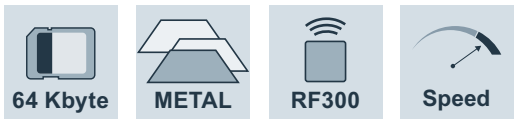

6GT2800-6BE00

Technical specifications

Article number	**6GT2800-5BE00**	**6GT2800-6BE00**
Product type designation	RF370T transponder	RF370T transponder
Suitability for operation	RF300	RF300
Wireless frequencies		
Operating frequency Rated value	13.56 MHz	13.56 MHz
Electrical data		
Range maximum	135 mm; range is reader dependent: observe http://support.automation.siemens.com/WW/view/en/67384964	
Protocol with radio transmission	RF300-specific	RF300-specific
Transfer rate with radio transmission maximum	106 kbit/s	106 kbit/s
Product feature multitag-capable	Yes	Yes
Product component Backup battery	No	No
Memory		
Type of memory	FRAM/EEPROM	FRAM/EEPROM
Storage capacity of the user memory	32 765 byte	65 277 byte
Type of memory organization	UID (fixed code) 4 bytes, user memory 32 765 bytes, OTP memory 20 bytes	UID (fixed code) 4 bytes, user memory 65 277 bytes, OTP memory 20 bytes
Number of read cycles at ambient temperature < 40 °C maximum	10 000 000 000	10 000 000 000
Number of write cycles at ambient temperature < 40 °C maximum	10 000 000 000	10 000 000 000
Data retention time at ambient temperature < 40 °C not less than	10 y	10 y
Property of memory	Block-by-block write protection of the OTP memory	Block-by-block write protection of the OTP memory

© Siemens AG 2016

RF370T

Article number	**6GT2800-5BE00**	**6GT2800-6BE00**
Product type designation	RF370T transponder	RF370T transponder
Suitability for operation	RF300	RF300
Mechanical data		
Material	PA12	PA12
Color	anthracite	anthracite
Tightening torque of the screw for securing the equipment maximum	1.2 Nm	1.2 Nm
Mounting distance relating to metal surfaces recommended minimum	0 mm	0 mm
Permitted ambient conditions		
Ambient temperature		
• during read/write access	-25 ... +85 °C	-25 ... +85 °C
• outside the read/write area	-40 ... +85 °C	-40 ... +85 °C
• during storage	-40 ... +85 °C	-40 ... +85 °C
Protection class IP	IP68	IP68
Shock resistance	According to DIN EN 60721-3-7 Class 7 M3	According to DIN EN 60721-3-7 Class 7 M3
Shock acceleration	500 m/s²	500 m/s²
Vibrational acceleration	200 m/s²	200 m/s²
Design, dimensions and weight		
Width	75 mm	75 mm
Height	41 mm	41 mm
Depth	75 mm	75 mm
Net weight	200 g	200 g
Mounting type	2 x M5 screws	2 x M5 screws
Product properties, functions, components general		
Product feature		
• silicon-free	Yes	Yes
• printable	No	No
Standards, specifications, approvals		
MTBF	1 200 y	1 200 y

Selection and ordering data

	Article No.
SIMATIC RF370T transponder	
• 32 KB FRAM	**6GT2800-5BE00**
• 64 KB FRAM	**6GT2800-6BE00**

Dimensional drawings

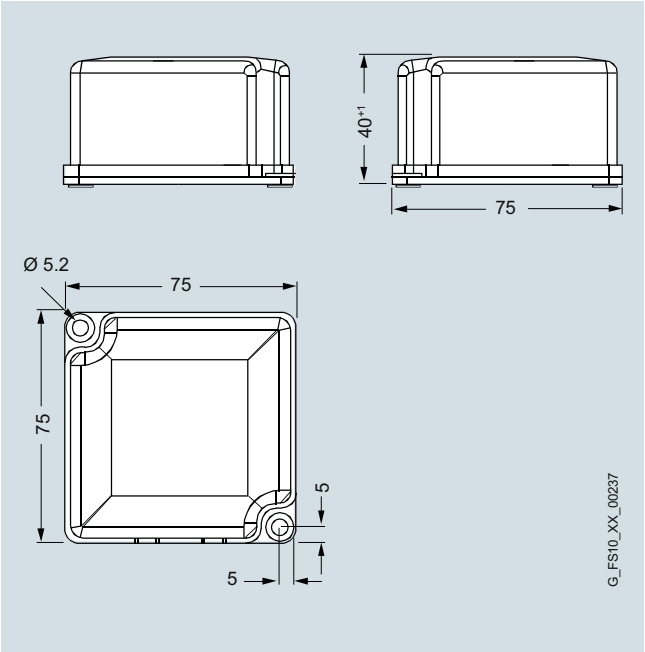

SIMATIC RF370T transponder

© Siemens AG 2016

Overview

Heat-resistant transponder, designed for skid identification in paint shops, temperature range up to +220 °C (cyclic).

Application

Typical applications are:

- Primer application, cataphoresis with the associated drying ovens
- Outer paint coating area with drying ovens
- Washing area with temperatures > +85°C

Mode of operation

Cyclic operation of the transponder at temperatures > 100 °C

At ambient temperatures between +110 °C and +220 °C, care must be taken to ensure that the internal temperature of the SIMATIC RF380T does not exceed the critical threshold of +110 °C. Each heating phase must therefore be followed by a cooling phase. Some limit cycles are listed in the table below.

Heating up		**Cooling down**	
Temperature	Time	Temperature	Time
200 °C	2 h	25 °C	> 8 h
200 °C	1 h	25 °C	> 2 h
190 °C	2 h	25 °C	> 7 h
190 °C	1 h	25 °C	> 1 h 45 min
180 °C	2 h	25 °C	> 5 h 30 min
180 °C	2 h	25 °C	> 4 h 30 min

A temperature calculation tool computes the temperature curve for the heat-proof SIMATIC RF380T transponder (see DVD "RFID Systems Software & Documentation", Article No. 6GT2080-2AA20).

© Siemens AG 2016

2

Technical specifications

Article number	**6GT2800-5DA00**
Product type designation	RF380T transponder
Suitability for operation	RF300
Wireless frequencies	
Operating frequency Rated value	13.56 MHz
Electrical data	
Range maximum	160 mm; range is reader dependent: observe
http://support.automation.siemens.com/WW/view/en/67384964	
Protocol with radio transmission	RF300-specific
Transfer rate with radio transmission maximum	106 kbit/s
Product feature multitag-capable	Yes
Product component Backup battery	No
Memory	
Type of memory	FRAM/EEPROM
Storage capacity of the user memory	32 765 byte
Type of memory organization	UID (fixed code) 4 bytes, memory 32 765 bytes, OTP memory 20 bytes
Number of read cycles at ambient temperature < 40 °C maximum	10 000 000 000
Number of write cycles at ambient temperature < 40 °C maximum	10 000 000 000
Data retention time at ambient temperature < 40 °C not less than	10 y
Property of memory	Block-by-block write protection of the OTP memory
Mechanical data	
Material	PPS
Color	brown
Mounting distance relating to metal surfaces recommended minimum	0 mm
Permitted ambient conditions	
Ambient temperature	
• during read/write access	-25 ... +110 °C
• outside the read/write area	-40 ... +220 °C
• during storage	-40 ... +110 °C
Ambient condition for operation	Cyclic operation at ambient temperature >110 °C
Protection class IP	IP68
Shock resistance	According to DIN EN 60721-3-7 Class 7 M3
Shock acceleration	500 m/s²
Vibrational acceleration	200 m/s²
Design, dimensions and weight	
Height	83 mm
Diameter	114 mm
Net weight	900 g
Mounting type	mount (see accessories)
Product properties, functions, components general	
Product feature	
• silicon-free	Yes
• printable	No
Standards, specifications, approvals	
Certificate of suitability	Ex: II 3G Ex nC IIB T5
MTBF	1 200 y
Accessories	
Accessories	Skid holder, shrouding cover, universal holder

Selection and ordering data

	Article No.
Transponder SIMATIC RF380T With 32 KB FRAM	**6GT2800-5DA00**
Accessories	
Skid support for SIMATIC RF380T Short type 	**6GT2090-0QA00**
Universal support For SIMATIC RF380T, e.g. for attaching to the body. 	**6GT2590-0QA00**
Shrouding cover For skid support. 	**6GT2090-0QB00**

© Siemens AG 2016

Dimensional drawings

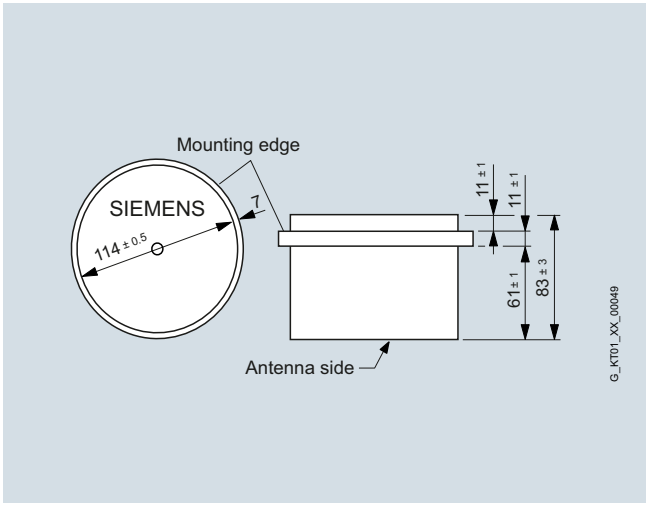

SIMATIC RF380T transponder

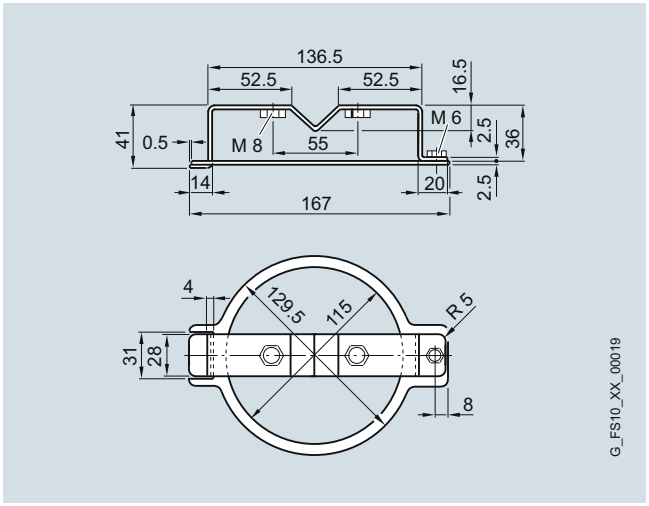

Universal holder for RF380T

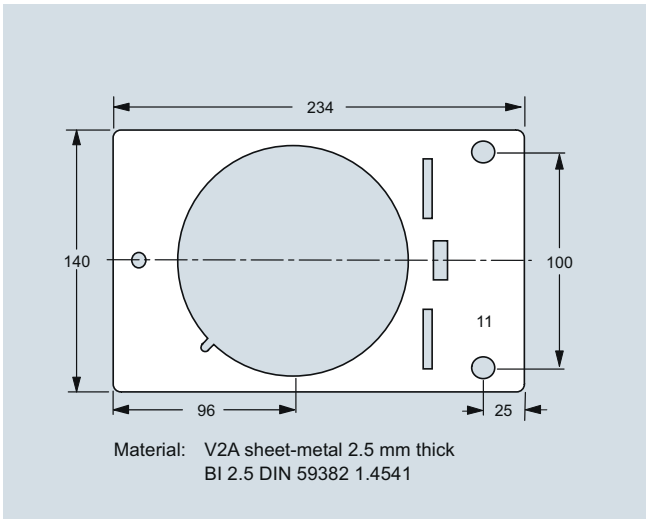

Skid holder for RF380T

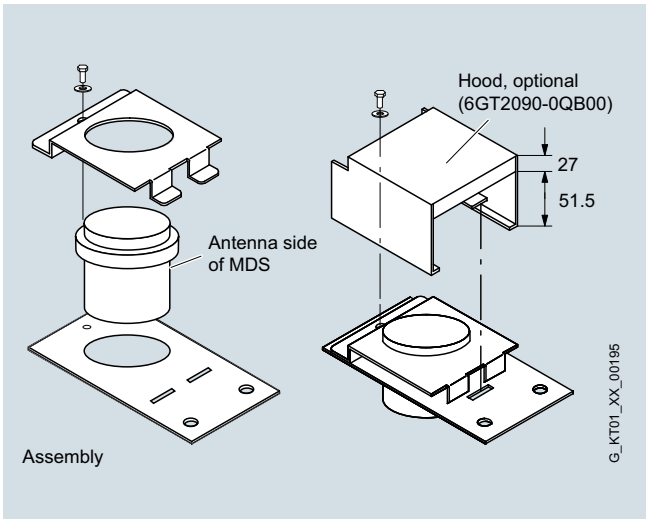

Skid holder, shrouding cover for RF380T

© Siemens AG 2016

2

Overview

The RFID system SIMATIC RF200 is, thanks to its compact and low-cost reader, particularly suitable for use in industrial production in the areas of small assembly lines and intralogistics.

With RF200, identification tasks of medium-performance in the RF range (13.56 MHz, ISO 15693) can be implemented extremely cost effectively. RF200 readers can be operated with all ISO transponders.

The communication modules that can be used for all MOBY and SIMATIC RF systems (ASM 456, ASM 475, SIMATIC RF1xxC) are available for connecting to SIMATIC S7, PROFIBUS, PROFINET, Ethernet/IP and TCP/IP (XML).

IO-Link

For simple identification tasks (e.g. reading an identification number) the RF210R/RF220R//RF240R/RF250R/RF260R readers are available in an interface version for IO-Link. With the help of this standardized interface it is extremely easy and economical to integrate the data automatically read by the reader into the automation level. The SIMATIC RF200 readers can be connected to the controllers of many well-known suppliers of automation solutions through an appropriate IO-Link master module.

Siemens offers IO-Link master modules for S7-1200, ET 200S, ET 200SP, ET 200AL and ET 200eco PN In this way, IO-Link is seamlessly integrated into the established PROFINET and PROFIBUS field buses and into the world of Totally Integrated Automation (TIA Portal).

The Siemens master modules allow up to four SIMATIC RF200 IO-Link readers to be connected.

The essential features of IO-Link are:

- Ease of use: No RFID-specific programming is necessary, ideal for RFID beginners.
- Particularly low channel costs per reading point (reader + IO-Link master interface).
- Openness through standardization: Many well-known manufacturers offer IO-Link masters.

The SIMATIC RF200 identification system offers the following features:

- 13.56 MHz operating frequency (operation according to ISO 15693).
- Passive (without battery), maintenance-free transponders (MDS Dxxx) with memory capacities up to 8 KB FRAM.
- Rugged, compact components with IP67 degree of protection.
- Easy integration into SIMATIC, PROFIBUS, PROFINET and TCP/IP.
- Reader versions with RS422, RS232 or IO-Link.

Benefits

get Designed for Industry

- Price-optimized and compact, space-saving components.
- Operation with the attractively priced and battery-free ISO 15693 transponders for low investment and operating costs.
- Flexible and economic solutions thanks to the complete and scalable portfolio for the field of industrial identification.
- Simplified engineering, commissioning, diagnostics and maintenance through seamless integration into Totally Integrated Automation:
  - Integrated bus connection to an automation system, such as SIMATIC, SIMOTION or SINUMERIK via communication modules with PROFIBUS and PROFINET.
  - Simple S7 software integration via ready-to-use function blocks.
- High investment security thanks to:
  - Open ISO 15693 standard.
  - Software compatibility between the RFID systems of Siemens.
  - Standardized communication interfaces.
- Openness through connection options to various bus systems from different manufacturers and PC environments via communication modules, RS232 or IO-Link.
- Worldwide Service and Support.
- tionsmodule, RS232 oder IO-Link.
- Weltweiter Service und Support.

Application

The RFID system SIMATIC RF200 is primarily used for non-contact identification of containers, pallets and workpiece holders where the demands on performance (data transmission rate, memory volume) satisfy the ISO 15693 standard.

The main application areas for SIMATIC RF200 are:

- Assembly and handling systems, assembly lines (identification of workpiece carriers), especially small assembly lines.
- Production logistics (material flow control, identification of containers and other vessels), intralogistics.
- Parts identification (the transponder is attached to the products or pallets).
- Conveyor systems (e.g. suspended monorail).

© Siemens AG 2016

Design

Due to their compact design and the integrated antenna, SIMATIC RF200 readers are suitable for mounting in confined spaces, e.g. in small assembly lines or in intralogistics.

The high IP67 degree of protection of the SIMATIC RF200 reader enables it to be used in harsh industrial environments.

Each SIMATIC RF200 reader has a multicolor LED which indicates the function and status of the reader on-site, as well as the presence of a transponder.

The interface to the automation level can be implemented by means of communication modules. For quick and easy cabling, pre-assembled cables with M12 plug-in connectors are available in various lengths.

Transponders compliant with ISO 15693 are used as mobile data carriers.

Transponders suitable for a wide variety of different requirements can be selected from an extensive range: For example, low-cost SmartLabels in rugged credit card format, or screw-fit transponders that can be attached by robots.

The transponders are attached to the object to be identified, e.g. by means of screws, adhesive or pre-assembled spacer.

Function

All of the SIMATIC RF200 readers are suitable for reliable reading and writing tasks in the HF range of 13.56 MHz. The SIMATIC RF200 IO-Link readers are designed for simple identification tasks.

The readers are connected (via an RS422 interface) to the automation level (e.g. SIMATIC S7) by means of communication modules over standard fieldbuses (e.g. PROFIBUS or PROFINET).

User-friendly function blocks are available for the S7 programming.

In the event of an error, the S7 application receives a detailed error message from the communication module via the function block.

In addition, there are the SIMATIC RF240R, RF250R and RF260R readers with an RS232 interface for connection to to the PC or to SIMATIC S7-1200.

The SIMATIC RF210R, RF220R, RF240R, RF250R and RF260R readers are available as versions with IO-Link interface.

Integration

A wide range of communication modules, function blocks, as well as high-performance drivers and function libraries permits easy and quick integration into the application.

And best of all: SIMATIC RF200 is part of Totally Integrated Automation (TIA) and can be integrated easily and cost-effectively into the SIMATIC world.

The IO-Link versions of the RF200 readers are integrated into the control level with the help of standardized IO-Link masters.

For more details on the connection possibilities, see Chapter 5 "Communication Modules".

SIMATIC Ident Configuration Guide

Here is a compact configuration tool for setting up RFID systems:

http://support.automation.siemens.com/WW/view/en/67384964

Technical specifications

RFID system	SIMATIC RF200
Transmission frequency	13.56 MHz
Maximum range	650 mm
Protocol (air interface)	• ISO 15693 • ISO 18000-3
Approvals[1)]	• EN 300330, 301489, CE • FCC Part 15 • UL/CSA
Memory capacity	max. 992 bytes (EEPROM) / 8 192 bytes (FRAM)
Data transfer rate, reader – transponder (not for IO-Link)	
• Read	Max. 1.5 kbyte/s
• Write	Max. 1.5 kbyte/s
Transmission time per byte for user data (IO-Link versions)	Typ. 40 ms
Multitag/Bulk capability	With RF290R reader only
Special features	• Particularly compact designs • For particularly low-cost RFID solutions • IO-Link for simple identification tasks

1) All current wireless approvals can be found on the Internet at: http://www.siemens.com/rfid-approvals

© Siemens AG 2016

2

Overview

Readers	Feature	Page
RF210R	M18 reader with integrated antenna.	2/79
RF210M	Handheld reader with integrated RF210R reader.	2/82
RF220R	M30 reader with integrated antenna.	2/83
RF240R	Very small compact reader with integrated antenna..	2/86

Readers	Feature	Page
RF250R	Extremely small compact reader for connecting external antennas (ANT 3, 8, 12, 18 and 30).	2/90
RF260R	Compact reader with integrated antenna.	2/95
RF290R	High-performance reader for connecting external antennas (ANT D5, D6, D10).	2/99
RF350M	Handheld terminal with integrated or external read/write antenna.	2/117

© Siemens AG 2016

Overview

SIMATIC RF210R is an M18 reader with integrated antenna. Its extremely compact design makes it ideal for use on small assembly lines.

This reader has either

- an RS422 interface with 3964R transmission procedure for connection to RFID communication modules (see Chapter 5),
- or a standardized IO-Link interface for connection to IO-Link master modules from Siemens or third parties.

Thanks to its high degree of protection and rugged design, the SIMATIC RF210R reader enables problem-free use even under the toughest industrial conditions. Connection is by means of either an 8-pin M12 plug-in connector (RS422 version) or a 4-pin M12 plug-in connector (IO-Link version).

The reader is operated with ISO 15693-compatible transponders.

6GT2821-1AC10

6GT2821-1AC32

Design

Minimum distance from reader to reader	
SIMATIC RF210R	≥ 100 mm

Technical specifications

Article number	6GT2821-1AC10	6GT2821-1AC32
Product type designation	RF210R reader	RF210R reader IO-Link
Suitability for operation	ISO 15693 transponders (MDS Dxxx), for connecting to communication modules	ISO 15693 transponders (MDS Dxxx), for connecting to an IO-Link master
Wireless frequencies		
Operating frequency Rated value	13.56 MHz	13.56 MHz
Electrical data		
Range maximum	20 mm; Range is dependent on transponder type: observe http://support.automation.siemens.com/WW/view/en/67384964	
Protocol with radio transmission	ISO 15693, ISO 18000-3	ISO 15693, ISO 18000-3
Transfer rate with radio transmission maximum	26.5 kbit/s	26.5 kbit/s
Product feature multitag-capable	No	No
Transfer rate at the point-to-point connection serial maximum	115.2 kbit/s	38.4 kbit/s
Transmission time for user data		
• for write access per byte typical	0.6 ms	40 ms
• for read access per byte typical	0.6 ms	40 ms
Interfaces		
Standard for interfaces for communication	RS422	IO-Link
Type of electrical connection	M12, 8-pin	M12, 4-pin
Mechanical data		
Material	Brass, nickel-plated / PBT	Brass, nickel-plated / PBT
Color	silver/pastel turquoise	silver/pastel turquoise
Tightening torque of the screw for securing the equipment maximum	20 Nm	20 Nm
Mounting distance relating to metal surfaces recommended minimum	0 mm	0 mm

© Siemens AG 2016

RF210R

Article number	**6GT2821-1AC10**	**6GT2821-1AC32**
Product type designation	RF210R reader	RF210R reader IO-Link
Supply voltage, current consumption, power loss		
Supply voltage		
• at DC Rated value	24 V	24 V
• at DC	20.4 ... 28.8 V	20.4 ... 28.8 V
Consumed current at 24 V DC		
• typical	0.05 A	0.05 A
Permitted ambient conditions		
Ambient temperature		
• during operation	-20 ... +70 °C	-20 ... +70 °C
• during storage	-25 ... +80 °C	-25 ... +80 °C
• during transport	-25 ... +80 °C	-25 ... +80 °C
Protection class IP	IP67	IP67
Shock resistance	EN 60721-3-7, Class 7 M2	EN 60721-3-7, Class 7 M2
Shock acceleration	500 m/s^2	500 m/s^2
Vibrational acceleration	200 m/s^2	200 m/s^2
Design, dimensions and weight		
Height	83 mm	83 mm
Diameter	18 mm	18 mm
Net weight	0.065 kg	0.065 kg
Mounting type	2 x M18 nuts (included in scope of supply)	2 x M18 nuts (included in scope of supply)
Cable length		
• for RS422 interface maximum	1 000 m	
• between master and IO-Link device maximum		20 m
Product properties, functions, components general		
Display version	3-color LED	3-color LED
Product feature silicon-free	Yes	Yes
Standards, specifications, approvals		
Certificate of suitability	Wireless according to R&TTE guidelines EN300 330 and EN 301489, FCC, UL/CSA	Wireless according to R&TTE guidelines EN300 330 and EN 301489, FCC, UL/CSA
MTBF	505 y	505 y
Accessories		
Accessories		IO-Link master, IO-Link connecting cables

© Siemens AG 2016

Selection and ordering data

	Article No.
SIMATIC RF210R reader (RS422)	**6GT2821-1AC10**
SIMATIC RF210R reader (IO-Link)	**6GT2821-1AC32**
Accessories	
Note: All connection options can be found in Chapter 5, "Communication Modules".	
IO-Link master SM 1278 For SIMATIC S7-1200, for 4 readers. 	**6ES7278-4BD32-0XB0**
IO-Link master 4SI For SIMATIC ET 200S, for 4 readers. 	**6ES7138-4GA50-0AB0**
IO-Link master For SIMATIC ET 200eco PN, for 4 readers. 	**6ES7148-6JA00-0AB0**
IO-Link master For ET 200SP, for 4 readers. 	**6ES7137-6BD00-0BA0**
IO-Link master For ET 200AL, for 4 readers. 	**6ES7147-5JD00-0BA0**

	Article No.
IO-Link connecting cables 	
• between IO-Link master and reader, with M12 plug on the IO-Link master, open end, 4-pole, 5 m	**6GT2891-4LH50**
• between IO-Link master and reader, with M12 plug on the IO-Link master, open end, 4-pole, 10 m	**6GT2891-4LN10**
• between IO-Link master and reader, with M12 plug at both ends, 4-pole, 5 m	**6GT2891-4MH50**
• between IO-Link master and reader, with M12 plug at both ends, 4-pole, 10 m	**6GT2891-4MN10**
DVD „RFID-Systems Software & Documentation“	**6GT2080-2AA20**

Dimensional drawings

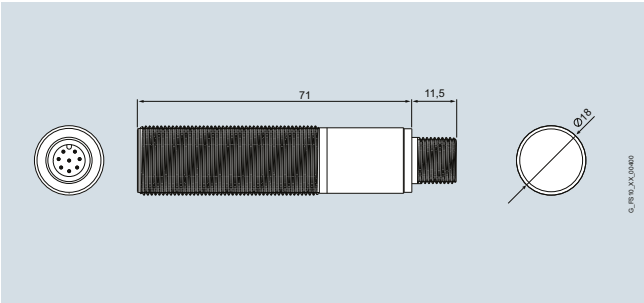

SIMATIC RF210R reader

More information

All current wireless approvals can be found on the Internet at:
http://www.siemens.com/rfid-approvals

© Siemens AG 2016

RF210M mobile handheld terminal

Overview

The field-proven RF210R M18 reader is integrated into the SIMATIC RF210M mobile handheld reader. It has been designed for manual workplaces and reworking stations for commissioning, as well as for tracking and tracing tasks and tool identification.

The handheld reader has an RS422 interface with 3964R transmission procedure for connection to RFID communication modules. Connection is via an 8-pole M12 plug-in connector (RS422 variant).

The handheld reader is operated with ISO 15693-compatible transponders.

Technical specifications

Article number	**6GT2823-0AA00**
Product type designation	RF210M hand-held reader
Suitability for operation	RF200/ISO 15693 transponders, to connect to communication modules via spiral cable with usable length of 2 m to 3.5 m
Range	0 ... 20 mm
Wireless frequencies	
Operating frequency Rated value	13.56 MHz
Electrical data	
Protocol with radio transmission	ISO 15693, ISO 18000-3
Transfer rate with radio transmission maximum	26.5 kbit/s
Product feature multitag-capable	No
Supply voltage, current consumption, power loss	
Type of current supply	24 V via communication module
Type of battery	-
Permitted ambient conditions	
Ambient temperature	
• during operation	-20 ... +50 °C
• during storage	-25 ... +60 °C
Height of fall maximum	1.5 m
Protection class IP	IP54

Article number	**6GT2823-0AA00**
Product type designation	RF210M hand-held reader
Design, dimensions and weight	
Depth	26 mm
Height	140 mm
Width	195 mm
Net weight	0.46 kg
Product properties, functions, components general	
Design of the display	3 color LED
Design of the interface	M12 8-pole with RS422 at spiral cable, which is permanently fixed to the reader
Product functions management, configuration	
Product function of the software	Function blocks for execution of ISO15693 transponders
Type of programming	Function blocks FB 45/55, ident profile
Standards, specifications, approvals	
Certificate of suitability	Wireless according to R&TTE guidelines EN300 330 and EN 301489, FCC, UL/CSA

Selection and ordering data

	Article No.
SIMATIC RF210M handheld reader (RS422)	**6GT2823-0AA00**
Accessories	
Note: All connection options can be found in Chapter 5, "Communication Modules".	
DVD „RFID-Systems Software & Documentation“	**6GT2080-2AA20**

Dimensional drawings

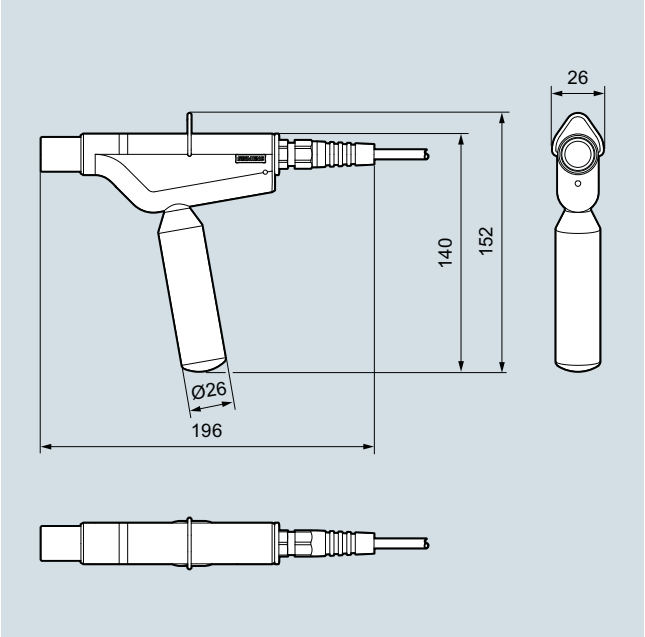

SIMATIC RF210M handheld reader

More information

All current wireless approvals can be found on the Internet at:
http://www.siemens.com/rfid-approvals

© Siemens AG 2016

Overview

CM ISO 6GT2821-2AC10

IO-Link ISO 6GT2821-2AC32

SIMATIC RF220R is an M30 reader with integrated antenna. Its compact design makes it ideal for use in small assembly lines which require a slightly higher range.

This reader has either

- an RS422 interface with 3964R transmission procedure for connection to RFID communication modules (see Chapter 5),
- or a standardized IO-Link interface for connection to IO-Link master modules from Siemens or third parties.

Thanks to its high degree of protection and rugged design, the SIMATIC RF220R reader enables problem-free use even under the toughest industrial conditions. Connection is by means of either an 8-pin M12 plug-in connector (RS422 version) or a 4-pin M12 plug-in connector (IO-Link version).

The reader is operated with ISO 15693-compatible transponders.

Design

Minimum distance from reader to reader	
SIMATIC RF220R	≥ 150 mm

Technical specifications

Article number	6GT2821-2AC10	6GT2821-2AC32
Product type designation	RF220R reader	RF220R reader IO-Link
Suitability for operation	ISO 15693 transponders (MDS Dxxx), for connecting to communication modules	ISO 15693 transponders (MDS Dxxx), for connecting to an IO-Link Master
Wireless frequencies		
Operating frequency Rated value	13.56 MHz	13.56 MHz
Electrical data		
Range maximum	35 mm; Range is dependent on transponder type: observe http://support.automation.siemens.com/WW/view/en/67384964	
Protocol with radio transmission	ISO 15693, ISO 18000-3	ISO 15693, ISO 18000-3
Transfer rate with radio transmission maximum	26.5 kbit/s	26.5 kbit/s
Product feature multitag-capable	No	No
Transfer rate at the point-to-point connection serial maximum	115.2 kbit/s	38.4 kbit/s
Transmission time for user data		
• for write access per byte typical	0.6 ms	40 ms
• for read access per byte typical	0.6 ms	40 ms
Interfaces		
Standard for interfaces for communication	RS422	IO-Link
Type of electrical connection	M12, 8-pin	M12, 4-pin
Mechanical data		
Material	Brass, nickel-plated / PBT	Brass, nickel-plated / PBT
Color	silver/pastel turquoise	silver/pastel turquoise
Tightening torque of the screw for securing the equipment maximum	40 Nm	40 Nm
Mounting distance relating to metal surfaces recommended minimum	0 mm	0 mm

© Siemens AG 2016

RF220R

Article number	**6GT2821-2AC10**	**6GT2821-2AC32**
Product type designation	RF220R reader	RF220R reader IO-Link
Supply voltage, current consumption, power loss		
Supply voltage		
• at DC Rated value	24 V	24 V
• at DC	20.4 ... 28.8 V	20.4 ... 28.8 V
Consumed current at DC at 24 V		
• typical	0.05 A	0.05 A
Permitted ambient conditions		
Ambient temperature		
• during operation	-20 ... +70 °C	-20 ... +70 °C
• during storage	-25 ... +80 °C	-25 ... +80 °C
• during transport	-25 ... +80 °C	-25 ... +80 °C
Protection class IP	IP67	IP67
Shock resistance	EN 60721-3-7, Class 7 M2	EN 60721-3-7, Class 7 M2
Shock acceleration	500 m/s^2	500 m/s^2
Vibrational acceleration	200 m/s^2	200 m/s^2
Design, dimensions and weight		
Height	83 mm	83 mm
Diameter	30 mm	30 mm
Net weight	0.14 kg	0.14 kg
Mounting type	2 x M30 nuts (included in scope of supply)	2 x M30 nuts (included in scope of supply)
Cable length		
• for RS422 interface maximum	1 000 m	
• between master and IO-Link device maximum		20 m
Product properties, functions, components general		
Display version	3-color LED	3-color LED
Product feature silicon-free	Yes	Yes
Standards, specifications, approvals		
Certificate of suitability	Wireless according to R&TTE guidelines EN300 330 and EN 301489, FCC, UL/CSA	Wireless according to R&TTE guidelines EN300 330 and EN 301489, FCC, UL/CSA
MTBF	501 y	501 y
Accessories		
Accessories		IO-Link master, IO-Link connecting cables

© Siemens AG 2016

Selection and ordering data

	Article No.
SIMATIC RF220R reader (RS422)	**6GT2821-2AC10**
SIMATIC RF220R reader (IO-Link)	**6GT2821-2AC32**
Accessories	
Note: All connection options can be found in Chapter 5, "Communication Modules".	
IO-Link master SM 1278 For SIMATIC S7-1200, for 4 readers. 	**6ES7278-4BD32-0XB0**
IO-Link master 4SI For SIMATIC ET 200S, for 4 readers. 	**6ES7138-4GA50-0AB0**
IO-Link master For SIMATIC ET 200eco PN, for 4 readers. 	**6ES7148-6JA00-0AB0**
IO-Link master For ET 200SP, for 4 readers. 	**6ES7137-6BD00-0BA0**
IO-Link master For ET 200AL, for 4 readers. 	**6ES7147-5JD00-0BA0**

	Article No.
IO-Link connecting cables 	
• between IO-Link master and reader, with M12 plug on the IO-Link master, open end, 4-pole, 5 m	**6GT2891-4LH50**
• between IO-Link master and reader, with M12 plug on the IO-Link master, open end, 4-pole, 10 m	**6GT2891-4LN10**
• between IO-Link master and reader, with M12 plug at both ends, 4-pole, 5 m	**6GT2891-4MH50**
• between IO-Link master and reader, with M12 plug at both ends, 4-pole, 10 m	**6GT2891-4MN10**
DVD „RFID-Systems Software & Documentation“	**6GT2080-2AA20**

Dimensional drawings

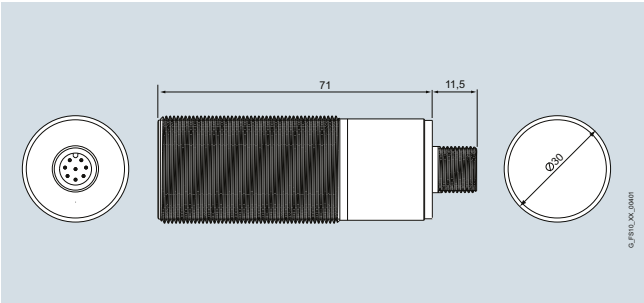

SIMATIC RF220R reader

More information

All current wireless approvals can be found on the Internet at:
http://www.siemens.com/rfid-approvals

© Siemens AG 2016

RF240R

Overview

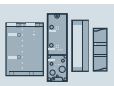

6GT2821-4AC10

6GT2821-4AC40

6GT2821-4AC32

SIMATIC RF240R is a reader with an integrated antenna. Its extra compact design makes it ideal for use in small assembly lines.

This reader has either

- an RS422 interface with 3964R transmission procedure for connection to RFID communication modules (see Chapter 5),
- or an RS232 interface with ASCII protocol for connection to S7-1200, PC-based systems or third-party controllers,
- or a standardized IO-Link interface for connection to IO-Link Master modules from Siemens or third parties.

Thanks to its high degree of protection and rugged design, the SIMATIC RF240R reader enables problem-free use even under the toughest industrial conditions. Connection is made either with an 8-pin M12 plug-in connector (RS422/RS232 version) or a 4-pin M12 plug-in connector (IO-Link version).

The reader is operated with ISO 15693-compatible transponders.

Design

Minimum distance from reader to reader	
SIMATIC RF240R	≥ 120 mm

Technical specifications

Article number	**6GT2821-4AC10**	**6GT2821-4AC40**	**6GT2821-4AC32**
Product type designation	RF240R reader	RF240R reader ASCII	RF240R reader IO-Link
Suitability for operation	ISO 15693 transponders (MDS Dxxx), for connecting to communication modules	ISO 15693 transponders (MDS Dxxx), for connecting to PC- and control systems	ISO 15693 transponders (MDS Dxxx), for connecting to an IO-Link Master
Wireless frequencies			
Operating frequency Rated value	13.56 MHz	13.56 MHz	13.56 MHz
Electrical data			
Range maximum	65 mm; Range is dependent on transponder type: observe http://support.automation.siemens.com/WW/view/en/67384964	65 mm; Range is dependent on transponder type: observe	65 mm; Range is dependent on transponder type: observe
Protocol with radio transmission	ISO 15693, ISO 18000-3	ISO 15693, ISO 18000-3	ISO 15693, ISO 18000-3
Transfer rate with radio transmission maximum	26.5 kbit/s	26.5 kbit/s	26.5 kbit/s
Product feature multitag-capable	No	No	No
Transfer rate at the point-to-point connection serial maximum	115.2 kbit/s	115.2 kbit/s	38.4 kbit/s
Transmission time for user data			
• for write access per byte typical	0.6 ms	1.2 ms	40 ms
• for read access per byte typical	0.6 ms	1.2 ms	40 ms
Interfaces			
Standard for interfaces for communication	RS422	RS232	IO-Link
Type of electrical connection	M12, 8-pin	M12, 8-pin	M12, 4-pin

© Siemens AG 2016

Article number	**6GT2821-4AC10**	**6GT2821-4AC40**	**6GT2821-4AC32**
Product type designation	RF240R reader	RF240R reader ASCII	RF240R reader IO-Link
Mechanical data			
Material	PA6.6	PA6.6	PA6.6
Color	anthracite	anthracite	anthracite
Tightening torque of the screw for securing the equipment maximum	1.5 Nm	1.5 Nm	1.5 Nm
Mounting distance relating to metal surfaces recommended minimum	0 mm	0 mm	0 mm
Supply voltage, current consumption, power loss			
Supply voltage			
• at DC Rated value	24 V	24 V	24 V
• at DC	20.4 ... 28.8 V	20.4 ... 28.8 V	20.4 ... 28.8 V
Consumed current at DC at 24 V			
• typical	0.05 A	0.05 A	0.05 A
Permitted ambient conditions			
Ambient temperature			
• during operation	-20 ... +70 °C	-20 ... +70 °C	-20 ... +70 °C
• during storage	-25 ... +80 °C	-25 ... +80 °C	-25 ... +80 °C
• during transport	-25 ... +80 °C	-25 ... +80 °C	-25 ... +80 °C
Protection class IP	IP67	IP67	IP67
Shock resistance	EN 60721-3-7, Class 7 M2	EN 60721-3-7, Class 7 M2	EN 60721-3-7, Class 7 M2
Shock acceleration	500 m/s^2	500 m/s^2	500 m/s^2
Vibrational acceleration	200 m/s^2	200 m/s^2	200 m/s^2
Design, dimensions and weight			
Width	50 mm	50 mm	50 mm
Height	30 mm	30 mm	30 mm
Depth	50 mm	50 mm	50 mm
Net weight	0.06 kg	0.06 kg	0.06 kg
Mounting type	2 x M5 screws	2 x M5 screws	2 x M5 screws
Cable length			
• with RS232 interface maximum		30 m	
• for RS422 interface maximum	1 000 m		
• between master and IO-Link device maximum			20 m
Product properties, functions, components general			
Display version	3-color LED	3-color LED	3-color LED
Product feature silicon-free	Yes	Yes	Yes
Standards, specifications, approvals			
Certificate of suitability	Wireless according to R&TTE guidelines EN300 330 and EN 301489, FCC, UL/CSA	Wireless according to R&TTE guidelines EN300 330 and EN 301489, FCC, UL/CSA	Wireless according to R&TTE guidelines EN300 330 and EN 301489, FCC, UL/CSA
MTBF	430 y	430 y	430 y
Accessories			
Accessories	Connecting cables	Connecting cables	IO-Link master, IO-Link connecting cables

© Siemens AG 2016

2

Selection and ordering data

	Article No.
SIMATIC RF240R reader (RS422)	**6GT2821-4AC10**
SIMATIC RF240R reader (RS232 - ASCII)	**6GT2821-4AC40**
SIMATIC RF240R reader (IO-Link)	**6GT2821-4AC32**
Accessories	
Note: All connection options can be found in Chapter 5, "Communication Modules".	
IO-Link master SM 1278 For SIMATIC S7-1200, for 4 readers.	**6ES7278-4BD32-0XB0**
IO-Link master 4SI For SIMATIC ET 200S, for 4 readers.	**6ES7138-4GA50-0AB0**
IO-Link master For SIMATIC ET 200eco PN, for 4 readers.	**6ES7148-6JA00-0AB0**
IO-Link master For ET 200SP, for 4 readers.	**6ES7137-6BD00-0BA0**

	Article No.
IO-Link master For ET 200AL, for 4 readers.	**6ES7147-5JD00-0BA0**
RS232 connecting cable Between reader and PC (RS232), 5 m long, material: PUR, CMG approval.	
• 24 V connection with M12 plug	**6GT2891-4KH50**
• 24 V connection with open ends	**6GT2891-4KH50-0AX0**
IO-Link connecting cables	
• between IO-Link Master and reader, with M12 connector on the IO-Link Master, open end, 4-pin, 5 m	**6GT2891-4LH50**
• between IO-Link Master and reader, with M12 connector on the IO-Link Master, open end, 4-pin, 10 m	**6GT2891-4LN10**
• between IO-Link Master and reader, with M12 connector at both ends, 4-pin, 5 m	**6GT2891-4MH50**
• between IO-Link Master and reader, with M12 connector at both ends, 4-pin, 10 m	**6GT2891-4MN10**
DVD „RFID-Systems Software & Documentation“	**6GT2080-2AA20**

© Siemens AG 2016

Dimensional drawings

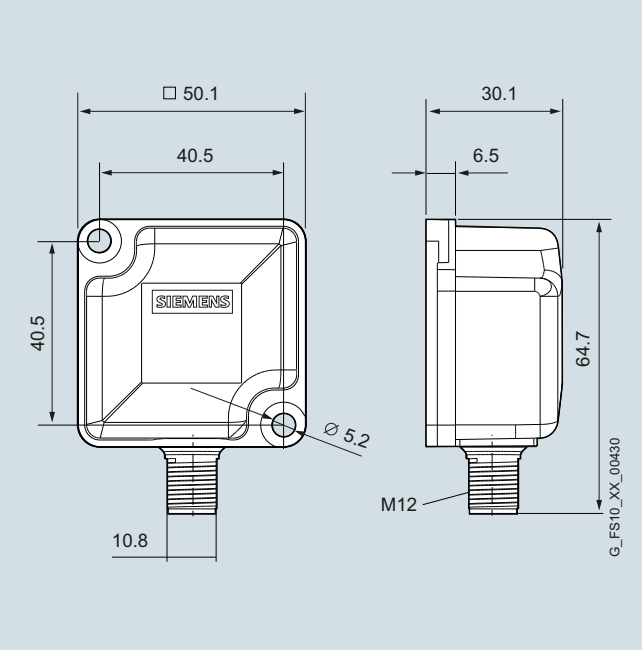

SIMATIC RF240R reader

More information

All current wireless approvals can be found on the Internet at:
http://www.siemens.com/rfid-approvals

© Siemens AG 2016

2

Overview

6GT2821-5AC10

6GT2821-5AC40

6GT2821-5AC32

SIMATIC RF250R is a reader for operation with external antennas. Thanks to the different antenna designs (ANT 3, ANT 3S, ANT 8, ANT 12, ANT18 and ANT 30), the potential applications in the areas of tool identification and small assembly lines are extremely varied.

This reader has either

- an RS422 interface with 3964R transmission procedure for connection to RFID communication modules (see Chapter 5),
- or an RS232 interface with ASCII protocol for connection to S7-1200, PC-based systems or third-party controllers,
- or a standardized IO-Link interface for connection to IO-Link Master modules from Siemens or third parties.

Thanks to its high degree of protection and rugged design, the SIMATIC RF250R reader enables problem-free use even under the toughest industrial conditions.

Connection is made either with an 8-pin M12 plug-in connector (RS422/RS232 version) or a 4-pin M12 plug-in connector (IO-Link version).

The reader is operated with ISO 15693-compatible transponders.

Connectable antennas

One of each of the following antennas can be operated on a SIMATIC RF250R reader:

- ANT 3, due to its slimline, compact design, this antenna can still be precisely positioned even in cramped conditions. The dimensions are L x W x H (mm): 50 x 28 x 10.
- ANT 3S, same as ANT 3, except suitable exclusively for processing of MDS D117, MDS D127, MDS D421 and MDS D521 transponders. The dimensions are L x W x H (mm): 50 x 28 x 10.
- ANT 8, this cylindrical antenna is mainly intended for the field of tool identification. The extremely small design of the antenna enables extremely accurate positioning, dimensions Ø x L (mm) M8 x 38.
- ANT 12, universal round antenna in M12 design for assembly lines with extremely small workpiece holders, dimensions Ø x L (mm) M12 x 40.
- ANT 18, universal round antenna in M18 design for assembly lines with small workpiece holders, dimensions Ø x L (mm) M18 x 55.
- ANT 30, universal round antenna for assembly lines with small workpiece holders, dimensions Ø x L (mm) M30 x 58.

Design

Connectable antennas	ANT 3	ANT 3S	ANT 8	ANT 12	ANT 18	ANT 30
See page	2/132	2/133	2/134	2/136	2/137	2/138
Inductive interface to the transponder	13.56 MHz					
Range, max.	50 mm	17 mm	4 mm	17 mm	37 mm	60 mm

Minimum distance between antennas

RF250R with antenna	ANT 3	ANT 3S	ANT 8	ANT 12	ANT 18	ANT 30
Minimum distance (mm) from antenna to antenna (D)						
• ANT 3	60	-	-	-	-	-
• ANT 3S	-	80	-	-	-	-
• ANT 8	-	-	60	-	-	-
• ANT 12	-	-	-	80	-	-
• ANT 18	-	-	-	-	125	-
• ANT 30	-	-	-	-	-	200

© Siemens AG 2016

Technical specifications

Article number	6GT2821-5AC10	6GT2821-5AC40	6GT2821-5AC32
Product type designation	RF250R reader	RF250R reader ASCII	RF250R reader IO-Link
Suitability for operation	ISO 15693 transponders (MDS Dxxx), for connecting to communication modules	ISO 15693 transponders (MDS Dxxx), for connecting to PC- and control systems	ISO 15693 transponders (MDS Dxxx), for connecting to an IO-Link Master
Wireless frequencies			
Operating frequency Rated value	13.56 MHz	13.56 MHz	13.56 MHz
Electrical data			
Range maximum	60 mm; Range is dependent on transponder type: observe http://support.automation.siemens.com/WW/view/en/67384964	60 mm; Range is dependent on transponder type: observe	60 mm; Range is dependent on transponder type: observe
Protocol with radio transmission	ISO 15693, ISO 18000-3	ISO 15693, ISO 18000-3	ISO 15693, ISO 18000-3
Transfer rate with radio transmission maximum	26.5 kbit/s	26.5 kbit/s	26.5 kbit/s
Product feature multitag-capable	No	No	No
Transfer rate at the point-to-point connection serial maximum	115.2 kbit/s	115.2 kbit/s	38.4 kbit/s
Transmission time for user data			
• for write access per byte typical	0.6 ms	1.2 ms	40 ms
• for read access per byte typical	0.6 ms	1.2 ms	40 ms
Interfaces			
Number of external antennas	1	1	1
Standard for interfaces for communication	RS422	RS232	IO-Link
Type of electrical connection			
• for external antenna(s)	M8, 4-pin	M8, 4-pin	M8, 4-pin
• for communications interface	M12, 8-pin	M12, 8-pin	M12, 4-pin
Mechanical data			
Material	PA6.6	PA6.6	PA6.6
Color	anthracite	anthracite	anthracite
Tightening torque of the screw for securing the equipment maximum	1.5 Nm	1.5 Nm	1.5 Nm
Mounting distance relating to metal surfaces recommended minimum	0 mm	0 mm	0 mm
Supply voltage, current consumption, power loss			
Supply voltage			
• at DC Rated value	24 V	24 V	24 V
• at DC	20.4 ... 28.8 V	20.4 ... 28.8 V	20.4 ... 28.8 V
Consumed current at DC at 24 V			
• typical	0.05 A	0.05 A	0.05 A
Permitted ambient conditions			
Ambient temperature			
• during operation	-20 ... +70 °C	-20 ... +70 °C	-20 ... +70 °C
• during storage	-25 ... +80 °C	-25 ... +80 °C	-25 ... +80 °C
• during transport	-25 ... +80 °C	-25 ... +80 °C	-25 ... +80 °C
Protection class IP	IP65	IP65	IP65
Shock resistance	EN 60721-3-7, Class 7 M2	EN 60721-3-7, Class 7 M2	EN 60721-3-7, Class 7 M2
Shock acceleration	500 m/s^2	500 m/s^2	500 m/s^2
Vibrational acceleration	200 m/s^2	200 m/s^2	200 m/s^2

© Siemens AG 2016

RF250R

Article number	6GT2821-5AC10	6GT2821-5AC40	6GT2821-5AC32
Product type designation	RF250R reader	RF250R reader ASCII	RF250R reader IO-Link
Design, dimensions and weight			
Width	50 mm	50 mm	50 mm
Height	30 mm	30 mm	30 mm
Depth	50 mm	50 mm	50 mm
Net weight	0.06 kg	0.06 kg	0.06 kg
Mounting type	2 x M5 screws	2 x M5 screws	2 x M5 screws
Cable length			
• with RS232 interface maximum		30 m	
• for RS422 interface maximum	1 000 m		
• between master and IO-Link device maximum			20 m
Product properties, functions, components general			
Display version	3-color LED	3-color LED	3-color LED
Product feature silicon-free	Yes	Yes	Yes
Standards, specifications, approvals			
Certificate of suitability	Wireless according to R&TTE guidelines EN300 330 and EN 301489, FCC, UL/CSA	Wireless according to R&TTE guidelines EN300 330 and EN 301489, FCC, UL/CSA	Wireless according to R&TTE guidelines EN300 330 and EN 301489, FCC, UL/CSA
MTBF	430 y	430 y	430 y
Accessories			
Accessories	Various antennas are available, connecting cables	Various antennas are available, connecting cables	Various antennas are available, IO-Link master, IO-Link connecting cables

© Siemens AG 2016

Selection and ordering data

	Article No.
SIMATIC RF250R reader (RS422 - 3964R) Without antenna, for connecting external antennas.	**6GT2821-5AC10**
SIMATIC RF250R reader (RS232 - ASCII) Without antenna, for connecting external antennas.	**6GT2821-5AC40**
SIMATIC RF250R reader (IO-Link) Without antenna, for connecting external antennas.	**6GT2821-5AC32**
Accessories	
Note: All connection options can be found in Chapter 5, "Communication Modules".	
Antennas	
External antenna ANT 3 For RF250R reader, with antenna connecting cable (3 m, double ended (plug M8 straight / M8 angled)). See page 2/132.	**6GT2398-1CD40-0AX0**
External antenna ANT 3S For RF350R reader, with antenna connecting cable (3 m, double ended (plug M8 straight / M8 angled)). See page 2/133.	**6GT2398-1CD60-0AX0**
External antenna ANT 8 For RF250R reader, with antenna connecting cable (3 m), double ended (plug M8 straight / M8 angled). See page 2/134.	**6GT2398-1CF10**
External antenna ANT 12 For RF250R readers, with antenna connecting cable. See page 2/136.	**6GT2398-1CC00**
External antenna ANT 18 For RF250R readers, with antenna connecting cable. See page 2/137.	**6GT2398-1CA00**
External antenna ANT 30 For RF250R readers, with antenna connecting cable. See page 2/138.	**6GT2398-1CD00**

	Article No.
IO-Link master	
IO-Link master SM 1278 For SIMATIC S7-1200, for 4 readers. 	**6ES7278-4BD32-0XB0**
IO-Link master 4SI For SIMATIC ET 200S, for 4 readers. 	**6ES7138-4GA50-0AB0**
IO-Link master For SIMATIC ET 200eco PN, for 4 readers. 	**6ES7148-6JA00-0AB0**
IO-Link master For ET 200SP, for 4 readers. 	**6ES7137-6BD00-0BA0**
IO-Link master For ET 200AL, for 4 readers. 	**6ES7147-5JD00-0BA0**

© Siemens AG 2016

RF250R

	Article No.
Connecting cables	
RS232 connecting cable	
Between reader and PC (RS232), 5 m, material: PUR, CMG approval. CMG-Zulassung.	
• 24 V connection with M12 plug	**6GT2891-4KH50**
• 24 V connection with open ends	**6GT2891-4KH50-0AX0**
IO-Link connecting cables	
• between IO-Link Master and reader, with M12 connector on the IO-Link Master, open end, 4-pin, 5 m	**6GT2891-4LH50**
• between IO-Link Master and reader, with M12 connector on the IO-Link Master, open end, 4-pin, 10 m	**6GT2891-4LN10**
• between IO-Link Master and reader, with M12 connector at both ends, 4-pin, 5 m	**6GT2891-4MH50**
• between IO-Link Master and reader, with M12 connector at both ends, 4-pin, 10 m	**6GT2891-4MN10**
DVD "RFID-Systems Software & Documentation"	**6GT2080-2AA20**

Dimensional drawings

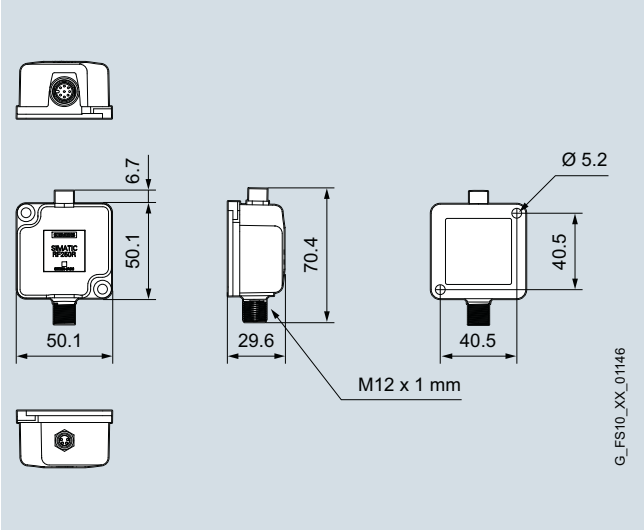

SIMATIC RF250R reader

More information

All current wireless approvals can be found on the Internet at:
http://www.siemens.com/rfid-approvals

© Siemens AG 2016

Overview

6GT2821-6AC10

6GT2821-6AC40

6GT2821-6AC32

SIMATIC RF260R is a reader with an integrated antenna. Its compact design makes it ideal for use in assembly lines.

This reader has either:

- an RS422 interface with 3964R transmission procedure for connection to the RFID communication modules (see Chapter 5),
- an RS232 interface with ASCII protocol for connection to S7-1200, PC-based systems or third-party controllers,
- or a standardized IO-Link interface for connection to IO-Link master modules from Siemens or third parties.

Thanks to its high degree of protection and rugged design, the SIMATIC RF260R reader enables problem-free use even under the toughest industrial conditions.

Connection is by means of either an 8-pin M12 plug-in connector (RS422/RS232 version) or a 4-pin M12 plug-in connector (IO-Link version).

The reader is operated with ISO 15693-compatible transponders.

Design

Minimum distance from reader to reader	
SIMATIC RF260R	≥ 150 mm

Technical specifications

Article number	**6GT2821-6AC10**	**6GT2821-6AC40**	**6GT2821-6AC32**
Product type designation	RF260R reader	RF260R ASCII reader	RF260R IO-Link reader
Suitability for operation	ISO 15693 transponders (MDS Dxxx), for connecting to communication modules	ISO 15693 transponders (MDS Dxxx), for connecting to PC- and control systems	ISO 15693 transponders (MDS Dxxx), for connecting to an IO-Link Master
Wireless frequencies			
Operating frequency Rated value	13.56 MHz	13.56 MHz	13.56 MHz
Electrical data			
Range maximum	135 mm; Range is dependent on transponder type: observe http://support.automation.siemens.com/WW/view/en/67384964		
Protocol with radio transmission	ISO 15693, ISO 18000-3	ISO 15693, ISO 18000-3	ISO 15693, ISO 18000-3
Transfer rate with radio transmission maximum	26.5 kbit/s	26.5 kbit/s	26.5 kbit/s
Product feature multitag-capable	No	No	No
Transfer rate at the point-to-point connection serial maximum	115.2 kbit/s	115.2 kbit/s	38.4 kbit/s
Transmission time for user data			
• for write access per byte typical	0.6 ms	1.2 ms	40 ms
• for read access per byte typical	0.6 ms	1.2 ms	40 ms
Interfaces			
Standard for interfaces for communication	RS422	RS232	IO-Link
Type of electrical connection	M12, 8-pin	M12, 8-pin	M12, 4-pin

© Siemens AG 2016

RF260R

Article number	6GT2821-6AC10	6GT2821-6AC40	6GT2821-6AC32
Product type designation	RF260R reader	RF260R ASCII reader	RF260R IO-Link reader
Mechanical data			
Material	PA6.6	PA6.6	PA6.6
Color	anthracite	anthracite	anthracite
Tightening torque of the screw for securing the equipment maximum	1.5 Nm	1.5 Nm	1.5 Nm
Mounting distance relating to metal surfaces recommended minimum	0 mm	0 mm	0 mm
Supply voltage, current consumption, power loss			
Supply voltage			
• at DC Rated value	24 V	24 V	24 V
• at DC	20.4 ... 28.8 V	20.4 ... 28.8 V	20.4 ... 28.8 V
Consumed current at DC at 24 V			
• typical	0.05 A	0.05 A	0.05 A
Permitted ambient conditions			
Ambient temperature			
• during operation	-20 ... +70 °C	-20 ... +70 °C	-20 ... +70 °C
• during storage	-25 ... +80 °C	-25 ... +80 °C	-25 ... +80 °C
• during transport	-25 ... +80 °C	-25 ... +80 °C	-25 ... +80 °C
Protection class IP	IP67	IP67	IP67
Shock resistance	EN 60721-3-7, Class 7 M2	EN 60721-3-7, Class 7 M2	EN 60721-3-7, Class 7 M2
Shock acceleration	500 m/s^2	500 m/s^2	500 m/s^2
Vibrational acceleration	200 m/s^2	200 m/s^2	200 m/s^2
Design, dimensions and weight			
Width	75 mm	75 mm	75 mm
Height	41 mm	41 mm	41 mm
Depth	75 mm	75 mm	75 mm
Net weight	0.2 kg	0.2 kg	0.2 kg
Mounting type	2 x M5 screws	2 x M5 screws	2 x M5 screws
Cable length			
• with RS232 interface maximum		30 m	
• for RS422 interface maximum	1 000 m		
• between master and IO-Link device maximum			20 m
Product properties, functions, components general			
Display version	3-color LED	3-color LED	3-color LED
Product feature silicon-free	Yes	Yes	Yes
Standards, specifications, approvals			
Certificate of suitability	Wireless according to R&TTE guidelines EN300 330 and EN 301489, FCC, UL/CSA	Wireless according to R&TTE guidelines EN300 330 and EN 301489, FCC, UL/CSA	Wireless according to R&TTE guidelines EN300 330 and EN 301489, FCC, UL/CSA
MTBF	480 y	430 y	480 y
Accessories			
Accessories	Connecting cables	Connecting cables	IO-Link master, IO-Link connecting cables

© Siemens AG 2016

Selection and ordering data

	Article No.
SIMATIC RF260R reader (RS422)	**6GT2821-6AC10**
SIMATIC RF260R reader (RS232 - ASCII)	**6GT2821-6AC40**
SIMATIC RF260R reader (IO-Link)	**6GT2821-6AC32**
Accessories	
Note: All connection options can be found in section 5, "Communication Modules".	
IO-Link master	
IO-Link master SM 1278 For SIMATIC S7-1200, for 4 readers.	**6ES7278-4BD32-0XB0**
IO-Link master 4SI For SIMATIC ET 200S, for 4 readers	**6ES7138-4GA50-0AB0**
IO-Link master For SIMATIC ET 200eco PN, for 4 readers	**6ES7148-6JA00-0AB0**
IO-Link master For ET 200SP, for 4 readers.	**6ES7137-6BD00-0BA0**
IO-Link master For ET 200AL, for 4 readers.	**6ES7147-5JD00-0BA0**

	Article No.
Connecting cables	
RS232 connecting cable Between reader and PC (RS232), 5 m, material: PUR, CMG approval. CMG-Zulassung.	
• 24 V connection with M12 plug	**6GT2891-4KH50**
• 24 V connection with open ends	**6GT2891-4KH50-0AX0**
IO-Link connecting cables	
	6GT2891-4LH50
• between IO-Link Master and reader, with M12 connector on the IO-Link Master, open end, 4-pin, 5 m	**6GT2891-4LN10**
• between IO-Link Master and reader, with M12 connector on the IO-Link Master, open end, 4-pin, 10 m	**6GT2891-4MH50**
• between IO-Link Master and reader, with M12 connector at both ends, 4-pin, 5 m	**6GT2891-4MN10**
DVD „RFID-Systems Software & Documentation“	**6GT2080-2AA20**

© Siemens AG 2016

2

Dimensional drawings

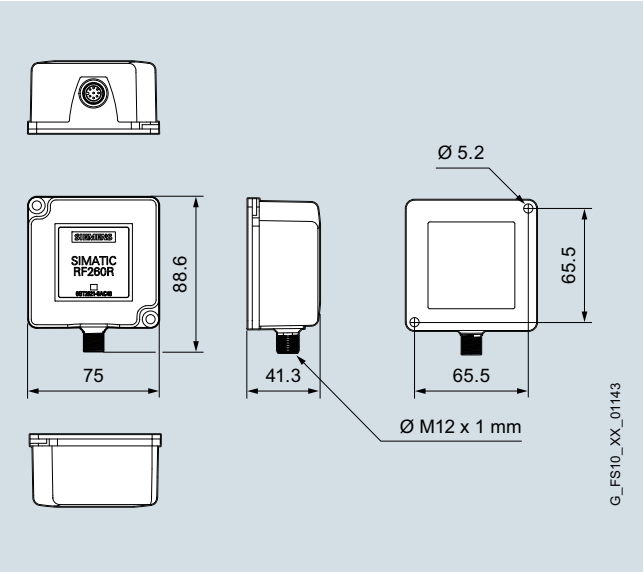

SIMATIC RF260R reader

More information

All current wireless approvals can be found on the Internet at:
http://www.siemens.com/rfid-approvals

© Siemens AG 2016

Overview

The SIMATIC RF290R reader is a compact long-range reader for the upper performance range and ranges of up to 60 cm. Intended for operation with external antennas ANT D1, ANT D5, ANT D6 and ANT D10. The application range for RF290R lies in the area of production control and intralogistics through to gate applications in which longer ranges for HF-RFID are required.

The reader is equipped with a combined RS422/RS232 interface, which is switched over when the corresponding connecting cable is used.

In RS422 mode, the reader can be connected to SIMATIC S7, PROFIBUS, PROFINET or Ethernet TCP/IP via the communication modules (see Chapter 5). Please note that due to the current consumption of the reader on the ASM 456 and RF160C, only one RF290R can be connected.

In the RS232 mode, the reader is suitable for integration into PC-based control systems. Trigger and alarm signals can be connected via digital inputs/outputs.

Furthermore, bulk detection of several hundred transponders is possible.

The antenna switch or the multiplexer enables several individual antennas or portal solutions to be implemented with only one RF290R. The RF260X antenna multiplexer supports the connection of up to 6 antennas to one reader and operates in quasi-parallel mode.

Connectable antennas

One of each of the following antennas can be operated on a SIMATIC RF290R:

- ANT D1
  Dimensions L x W x H (mm): 75 x 75 x 20.
- ANT D5
  Dimensions L x W x H (mm): 380 x 380 x 110.
- ANT D6
  Dimensions L x W x H (mm): 580 x 480 x 110.
- ANT D10
  Dimensions L x W x H (mm): 1150 x 365 x 115.

ANT D1

The ANT D1 is a universal antenna for the production and logistics areas that can also be used in dynamic applications. The high degree of protection (IP67) means the antenna can also be used under harsh industrial conditions.

ANT D5

Universal antenna for warehouse, logistics and distribution applications. The high degree of protection (IP65) enables the antenna to be used under harsh industrial conditions.

ANT D6

Antenna in the upper performance range, designed especially for warehouse, logistics and distribution applications. It can be used wherever high speeds are required together with a large write/read distance.

ANT D10

The ANT D10 is suitable for use in warehouses, logistics and distribution. An antenna with this geometry is required in the clothing industry and laundries in particular.

Design

Connectable antennas	ANT D1	ANT D5	ANT D6	ANT D10
See page	2/139	2/141	2/143	2/145
Inductive interface to the transponder	13.56 MHz			
Range	250 mm	480 mm	650 mm	480 mm

SIMATIC RF290R with antenna	ANT D1	ANT D5	ANT D6	ANT D10
Minimum distance (m) from antenna to antenna (D)				
• ANT D1	0,5	-	-	-
• ANT D5	-	2	-	-
• ANT D6	-	-	2	-
• ANT D10	-	-	-	2

© Siemens AG 2016

RF290R

Technical specifications

Article number	**6GT2821-0AC12**
Product type designation	RF290R reader
Suitability for operation	ISO 15693 transponders (MDS Dxxx), for connecting to communication modules and PC systems
Wireless frequencies	
Operating frequency Rated value	13.56 MHz
Electrical data	
Range maximum	650 mm; Range adjustable in reader via transmission power, range is dependent on transponder type: observe
http://support.automation.siemens.com/WW/view/en/67384964	
Protocol with radio transmission	ISO 15693, ISO 18000-3
Transfer rate with radio transmission maximum	26.5 kbit/s
Product feature multitag-capable	Yes
Transfer rate at the point-to-point connection serial maximum	115.2 kbit/s
Transmission time for user data	
• for write access per byte typical	0.6 ms
• for read access per byte typical	0.6 ms
Interfaces	
Number of external antennas	1
Standard for interfaces for communication	RS422/RS232
Type of electrical connection	M12, 8-pin
• for external antenna(s)	TNC
• for supply voltage	M12, 8-pin
• for communications interface	M12, 8-pin
• at the digital inputs/outputs	M12, 4-pin, female connector
Number of digital inputs	1
Number of digital outputs	1
Mechanical data	
Material	aluminum
Color	silver/anthracite
Tightening torque of the screw for securing the equipment maximum	1.5 Nm
Mounting distance relating to metal surfaces recommended minimum	0 mm
Supply voltage, current consumption, power loss	
Supply voltage	
• at DC Rated value	24 V
• at DC	21.6 ... 26.4 V
Consumed current at DC at 24 V	
• typical	0.4 A
• maximum	0.5 A
Permitted ambient conditions	
Ambient temperature	
• during operation	-20 ... +55 °C
• during storage	-25 ... +85 °C
• during transport	-25 ... +85 °C
Protection class IP	IP65
Shock resistance	EN 60721-3-7 Class 7 M2
Shock acceleration	300 m/s²
Vibrational acceleration	20 m/s²

Article number	**6GT2821-0AC12**
Product type designation	RF290R reader
Design, dimensions and weight	
Width	200 mm
Height	80 mm
Depth	140 mm
Net weight	1.8 kg
Mounting type	4 x M6 screws
Cable length	
• of antenna cable minimum	3.3 m
• of antenna cable maximum	25 m
• with RS232 interface maximum	30 m
• for RS422 interface maximum	1 000 m
Product properties, functions, components general	
Display version	4 LEDs
Standards, specifications, approvals	
Certificate of suitability	CE, FCC, IC (Canada)
MTBF	18 y
Accessories	Various antennas are available, antenna combiners, antenna multiplexer, mounting set for top-hat rail mounting
Accessories	

© Siemens AG 2016

Selection and ordering data

	Article No.
SIMATIC RF290R reader Without antenna	**6GT2821-0AC12**
Antennas for SIMATIC RF290R reader Including antenna cable	
• Antenna ANT D1	**6GT2698-5AC00**
• Antenna ANT D5	**6GT2698-5AA10**
• Antenna ANT D6	**6GT2698-5AB00**
• Antenna ANT D10 Cover included in scope of delivery.	**6GT2698-5AF00**
Accessories	
Note: All connection options can be found in Chapter 5, "Communication Modules".	
Antenna switch For connecting several antennas (ANT D5, ANT D6 or ANT D10) to one reader. 	**6GT2690-0AC00**
SIMATIC RF260X antenna multiplexer Antenna multiplexer for RF290R reader when connected via RS232; 6 x antenna outputs (for ANT D5, ANT D6 and ANT D10); IP65; 240 mm x 150 mm x 70 mm; including antenna connecting cable, cable length 0.4 m. 	**6GT2894-0EA00**
Covering hood for ANT D6 Serves as protection against contact.	**6GT2690-0AD00**
RS232 connecting cable Between reader and PC (RS232), 5 m long, material: PUR, CMG approval.	
• 24 V connection with M12 plug 	**6GT2891-4KH50**
• 24 V connection with open ends 	**6GT2891-4KH50-0AX0**

	Article No.
Accessories for antenna switch and antenna multiplexer	
Antenna connecting cable Between antenna and reader or antenna switch/multiplexer, PVC material.	
• Length 3.3 m	**6GT2691-0CH33**
• Length 10 m	**6GT2691-0CN10**
Extension cable For 6GT2691-0CH33, PVC material. Length 7.2 m.	**6GT2691-0DH72**
Standard rail mounting	**6GK5798-8ML00-0AB3**
DVD „RFID Systems Software & Documentation“	**6GT2080-2AA20**

Dimensional drawings

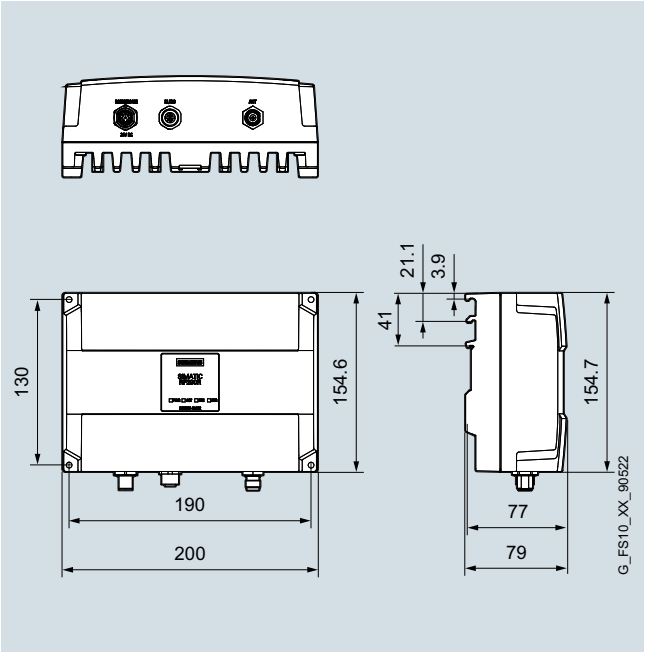

SIMATIC RF290R reader

More information

All current wireless approvals can be found on the Internet at:
http://www.siemens.com/rfid-approvals

© Siemens AG 2016

2

Overview

The RFID system SIMATIC RF300 is particularly suitable for use in industrial production in the areas of production control, assembly lines and conveyors.

SIMATIC RF300 is used to implement identification tasks with medium to high performance in the HF range (13.56 MHz).

Depending on the performance of the identification system, two versions of the system are available:

- Medium performance: System configuration with SIMATIC RF300 readers in ISO 15963 mode and low-cost MOBY D transponders.
- High performance: System configuration with SIMATIC RF300 readers in RF300 mode and SIMATIC RF300 transponders.

The SIMATIC RF300 identification system offers the following features:

- 13.56 MHz operating frequency
- For operating with ISO 15693 mode or RF300 mode
- Passive (without battery), maintenance-free transponder (MDS Dxxx and RF3xxT) with memory up to 64 KB
- Rugged, compact components with IP67 / IP68 degree of protection
- Very high immunity to noise
- Extensive diagnostic functions
- Extremely fast data transmission
- Easy integration into SIMATIC, PROFIBUS, PROFINET and TCP/IP.

Benefits

get Designed for Industry

- Rugged, compact components with high degree of protection (up to IP68).
- Data communication that is highly resistant to interference with a high degree of data security.
- Maintenance-free data carriers with up to 64 KB.
- Extremely high-speed data transmission between reader and transponder (up to 7.8 KB/s).
- Flexible and economic solutions thanks to the complete and scalable portfolio for the field of industrial identification.
- Simplified engineering, commissioning, diagnostics and maintenance through seamless integration into Totally Integrated Automation (TIA):
  - Integrated bus connection to an automation system, such as SIMATIC, SIMOTION or SINUMERIK via communication modules with PROFIBUS and PROFINET.
  - Simple S7 software integration via ready-to-use function blocks.
  - Extensive status and diagnostic functions.
- High investment security thanks to:
  - Open standard in accordance with ISO standard 15693.
  - Software compatibility between the RFID systems of Siemens.
  - Standardized communication interfaces.
- Openness through connection possibilities to various bus systems from different manufacturers and PC environments via communication modules.
- Worldwide service and support.

Application

The RFID system SIMATIC RF300 is used primarily for contact-free identification of containers, pallets and workpiece holders in a closed production cycle. This means that the data carriers (transponders, tags) remain in the production chain and are not shipped out with the products. Thanks to the compact enclosure dimensions of the transponders as well as of the read/write devices, SIMATIC RF300 is particularly suitable for (small) assembly lines where space is at a premium.

The main application areas of SIMATIC RF300 are:

- Assembly and handling systems, assembly lines (identification of workpiece carriers)
- Production logistics (material flow control, identification of containers and other vessels)
- Parts identification (e.g. transponder is attached to product or pallet)
- Conveyor systems (e.g. overhead monorail conveyors)

© Siemens AG 2016

Design

The high IP68 degree of protection of the SIMATIC RF300 reader enables it to be used in harsh industrial environments.

The SIMATIC RF310R, RF340R and RF380R devices have an integrated antenna. The SIMATIC RF350R reader is operated with an external antenna.

Each SIMATIC RF300 reader has a multicolor LED which locally indicates the function and status of the reader as well as of the transponder.

The interface to the automation level can be implemented by means of communication modules. For quick and easy cabling, pre-assembled cables with M12 plug-in connectors are available in various lengths.

All readers can be operated either according to the RFID standard ISO 15693, or in high-performance RF300 mode.

Depending on the mode of the reader, a comprehensive range of transponders is available for a wide variety of requirements.

For use in accordance with the ISO 15693 standard there are various versions available, e.g. low-cost SmartLabels for simple identification tasks, rugged credit card formats or screw-fit transponders that can be automatically attached by robots.

Additional transponders are available for selection for the high-performance RF300 mode, e.g. particularly heat-resistant transponders for temperatures up to +220 °C, or particularly compact rectangular designs for use on small workpiece holders.

The transponders are attached to the object to be identified, e.g. by means of screws, adhesive or pre-assembled spacer.

Function

All of the SIMATIC RF300 readers are suitable for reliable reading and writing tasks in the HF range of 13.56 MHz. In the ISO 15693 operating mode, identification tasks in the medium-performance range are possible.

The RF300 mode permits high-performance operation with a high-speed data transmission of up to 7.8 kbytes/s and is therefore one of the fastest RFID systems in the HF range.

Connection of readers to the automation level (e.g. SIMATIC S7) via standard fieldbuses (e.g. PROFIBUS or PROFINET) is by means of communication modules to which the readers can be connected via an RS422 interface.

User-friendly function blocks are available for the S7 programming.

In the event of an error, the S7 application receives a detailed error message from the communication module via the function block.

In addition, there is the option of the SIMATIC RF380R readers with an RS232 interface for the connection to the PC or to SIMATIC S7-1200.

The SIMATIC RF380R, RF382R and RF310R readers are available as scan mode variants (read only) for identification tasks without special command control. In these variants, the reader reads each detected transponder (UID or user data) automatically and outputs this data via the serial interface to be received by a PC, for example.

Extended diagnostics functions in RF300 mode, such as the field strength measured variable or the signature error counter, enable the HF field or the quality of the air interface to be measured.

Integration

A wide range of communication modules, function blocks, as well as high-performance drivers and function libraries permits easy and quick integration into the application.

And best of all: SIMATIC RF300 is part of Totally Integrated Automation (TIA) and can be integrated easily and cost-effectively into the SIMATIC world.

For more details on the connection possibilities, see Chapter 5 "Communication Modules".

SIMATIC Ident Configuration Guide

Here is a compact configuration tool for setting up RFID systems:

http://support.automation.siemens.com/WW/view/en/67384964

Technical specifications

RFID system	SIMATIC RF300
Transmission frequency	13.56 MHz
Maximum range	210 mm
Protocol (air interface)	• ISO 15693 • ISO 18000-3 • RF300 (proprietary)
Approvals[1)]	• EN 300330, 301489, CE • FCC Part 15 • UL/CSA • ATEX
Memory capacity	Max. 64 KB
Data transmission rate reader – transponder	
• Read	Max. 7.8 kbyte/s
• Write	Max. 7.8 kbyte/s
Multitag/Bulk capability	No
Special features	• High data transfer rate • Extended diagnostic possibilities • High memory capacity

1) All current wireless approvals can be found on the Internet at: http://www.siemens.com/rfid-approvals

© Siemens AG 2016

2

Overview

Readers	Features	Page
RF310R	Ideal for use on small assembly lines. The reader has an integrated antenna.	2/105
RF340R	Ideal for use on assembly lines. Reader for connecting external antennas	2/107
RF350R	Ideal for use on assembly lines. Reader for connecting external antennas (ANT 1, 3, 3S, 12, 18, 30).	2/109

Readers	Features	Page
RF380R	Ideal for use in assembly lines in which long ranges are required. The reader has an integrated antenna.	2/112
RF382R	Ideal for use in assembly lines in which transponders must be read from the side. Reader with integrated special antenna. Scan mode (read only).	2/115
RF350M	Mobile handheld terminal with integrated or external read/write antenna.	2/117

© Siemens AG 2016

Overview

6GT2801-1AB10

6GT2801-1AB20-0AX1

Due to its small, compact design, the SIMATIC RF310R reader can be used to considerable advantage in small assembly lines.

This reader is available with an RS422 interface for the RFID communication modules (see Chapter 5).

The SIMATIC RF310R is also available as a scan mode variant (automatic read mode, without command control). This automatic read-only mode does not require a special command control, but supplies the autonomously read transponder data directly to the connected host system.

Due to the high degree of protection and the use of high-quality materials, the SIMATIC RF310R ensures problem-free operation even under the harshest industrial conditions. It is connected via an 8-pole M12 plug-in connector.

The reader can process the high-speed RF300 transponders and the ISO-15693-compatible transponders (see RFID systems field data table on page 1/10).

Design

Minimum distance from reader to reader	
SIMATIC RF310R	≥ 100 mm

Technical specifications

Article number	**6GT2801-1AB10**	**6GT2801-1AB20-0AX1**
Product type designation	RF310R reader	RF310R reader
Suitability for operation	RF300 and ISO 15693 transponders (MDS Dxxx), for connecting to communication modules	RF300 and ISO 15693 transponders (MDS Dxxx), for serial connection to control systems (Scan Mode)
Wireless frequencies		
Operating frequency Rated value	13.56 MHz	13.56 MHz
Electrical data		
Range maximum	60 mm; Range is dependent on transponder type: observe http://support.automation.siemens.com/WW/view/en/67384964	
Protocol with radio transmission	RF300-specific, ISO 15693, ISO 18000-3	RF300-specific, ISO 15693, ISO 18000-3
Transfer rate with radio transmission maximum	106 kbit/s	106 kbit/s
Product feature multitag-capable	No	No
Transfer rate at the point-to-point connection serial maximum	115.2 kbit/s	115.2 kbit/s
Transmission time for user data		
• for write access per byte typical	0.13 ms	
• for read access per byte typical	0.13 ms	0.13 ms
Interfaces		
Standard for interfaces for communication	RS422	RS422
Type of electrical connection	M12, 8-pin	M12, 8-pin

© Siemens AG 2016

RF310R

Article number	**6GT2801-1AB10**	**6GT2801-1AB20-0AX1**
Product type designation	RF310R reader	RF310R reader
Mechanical data		
Material	PA 12	PA 12
Color	anthracite	anthracite
Mounting distance relating to metal surfaces recommended minimum	0 mm	0 mm
Supply voltage, current consumption, power loss		
Supply voltage		
• at DC Rated value	24 V	24 V
• at DC	20.4 ... 28.8 V	20.4 ... 28.8 V
Consumed current at DC at 24 V		
• typical	0.05 A	0.05 A
Permitted ambient conditions		
Ambient temperature		
• during operation	-25 ... +70 °C	-25 ... +70 °C
• during storage	-40 ... +85 °C	-40 ... +85 °C
• during transport	-40 ... +85 °C	-40 ... +85 °C
Protection class IP	IP67	IP67
Shock resistance	EN 60721-3-7, Class 7 M2	EN 60721-3-7, Class 7 M2
Shock acceleration	500 m/s²	500 m/s²
Vibrational acceleration	200 m/s²	200 m/s²
Design, dimensions and weight		
Width	55 mm	55 mm
Height	30 mm	30 mm
Depth	75 mm	75 mm
Net weight	0.2 kg	0.2 kg
Mounting type	4 x M5 screws	4 x M5 screws
Cable length		
• for RS422 interface maximum	1 000 m	1 000 m
Product properties, functions, components general		
Display version	3-color LED	3-color LED
Product feature silicon-free	Yes	Yes
Standards, specifications, approvals		
Certificate of suitability	Wireless according to R&TTE guidelines EN 300 330, EN 301489, CE, FCC, UL/CSA	Wireless according to R&TTE guidelines EN 300 330, EN 301489, CE, FCC, UL/CSA
MTBF	154 y	170 y

Selection and ordering data

	Article No.
SIMATIC RF310R reader	
• With RS422 interface (3964R protocol)	**6GT2801-1AB10**
• as a scan mode variant (RS422)	**6GT2801-1AB20-0AX1**
Accessories	
Note: All connection options can be found in the chapter 5 "Communication Modules".	
DVD „RFID-Systems Software & Documentation“	**6GT2080-2AA20**

More information

All current wireless approvals can be found on the Internet at:

http://www.siemens.com/rfid-approvals

Dimensional drawings

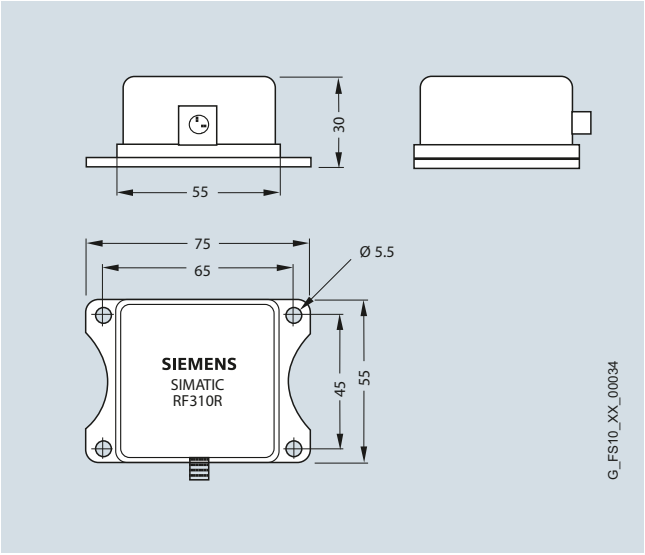

SIMATIC RF310R reader without Scan Mode

© Siemens AG 2016

Overview

The SIMATIC RF340R is a reader with integrated antenna for the medium performance range and can be used to great advantage in assembly lines thanks to its compact design. This reader is also particularly suitable for dynamic applications, in which the transponder does not stop during the read/write process.

This reader has an RS422 interface with 3964R transmission procedure for connection to RFID communication modules (see Chapter 5).

Thanks to the high degree of protection and the use of high-quality materials, the SIMATIC RF340R ensures problem-free use even under the toughest industrial conditions. It is connected via an 8-pole M12 plug-in connector.

The reader can process the high-speed RF300 transponders and the ISO-15693-compatible transponders (see RFID systems field data table on page 1/10).

Design

Minimum distance from reader to reader	
SIMATIC RF340R	≥ 200 mm

Technical specifications

Article number	**6GT2801-2AB10**
Product type designation	RF340R reader
Suitability for operation	RF300 and ISO 15693 transponders (MDS Dxxx), for connecting to communication modules
Wireless frequencies	
Operating frequency Rated value	13.56 MHz
Elektrische Daten	
Range maximum	140 mm; Range is dependent on transponder type: observe
http://support.automation.siemens.com/WW/view/en/67384964	
Protocol with radio transmission	RF300-specific, ISO 15693, ISO 18000-3
Transfer rate with radio transmission maximum	106 kbit/s
Product feature multitag-capable	No
Transfer rate at the point-to-point connection serial maximum	115.2 kbit/s
Transmission time for user data	
• for write access per byte typical	0.13 ms
• for read access per byte typical	0.13 ms
Interfaces	
Standard for interfaces for communication	RS422
Type of electrical connection	M12, 8-pin
Mechanical data	
Material	PA 12
Color	anthracite
Mounting distance relating to metal surfaces recommended minimum	0 mm
Supply voltage, current consumption, power loss	
Supply voltage	
• at DC Rated value	24 V
• at DC	20.4 ... 28.8 V
Consumed current at DC at 24 V	
• typical	0.1 A
Permitted ambient conditions	
Ambient temperature	
• during operation	-25 ... +70 °C
• during storage	-40 ... +85 °C
• during transport	-40 ... +85 °C
Protection class IP	IP67
Shock resistance	EN 60721-3-7, Class 7 M2
Shock acceleration	500 m/s²
Vibrational acceleration	200 m/s²
Design, dimensions and weight	
Width	75 mm
Height	41 mm
Depth	75 mm
Net weight	0.25 kg
Mounting type	2 x M5 screws
Cable length	
• for RS422 interface maximum	1 000 m
Product properties, functions, components general	
Display version	3-color LED
Product feature silicon-free	Yes
Standards, specifications, approvals	
Certificate of suitability	Wireless according to R&TTE guidelines EN 300 330, EN 301489, CE, FCC, UL/CSA, Ex: II 3G Ex nA nC IIB T5, II 3D Ex tD A22 IP6x T80°C
MTBF	140 y

© Siemens AG 2016

2

Selection and ordering data

	Article No.
SIMATIC RF340R reader	**6GT2801-2AB10**
Accessories	
Note: All connection options can be found in section 5, "Communication Modules".	
DVD „RFID-Systems Software & Documentation“	**6GT2080-2AA20**

Dimensional drawings

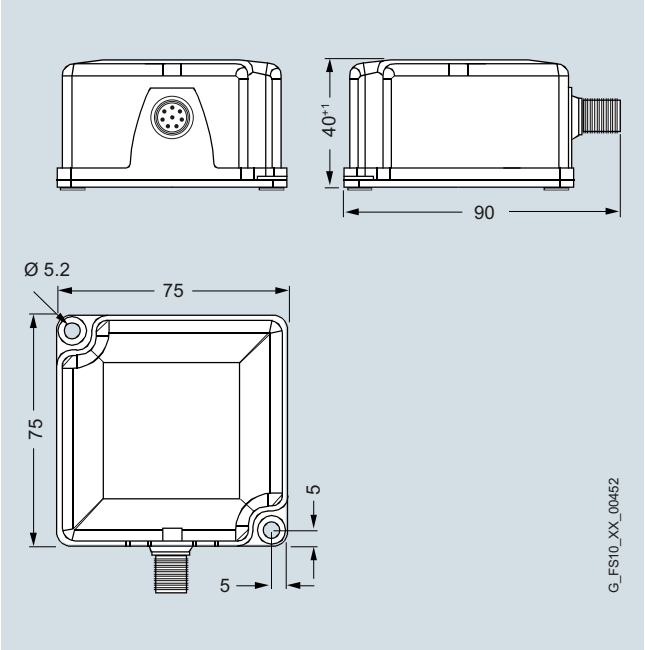

SIMATIC RF340R reader

More information

All current wireless approvals can be found on the Internet at:
http://www.siemens.com/rfid-approvals

© Siemens AG 2016

Overview

SIMATIC RF350R is a universal reader for operation with external antennas. Due to the different, pluggable antenna designs (flat antenna, round antennas), there are many possible applications in the area of industrial production, especially in assembly lines.

This reader has an RS422 interface with 3964R transmission procedure for connection to RFID communication modules (see Chapter 5).

Due to the high degree of protection and the use of high-quality materials, the SIMATIC RF350R ensures problem-free operation even under the harshest industrial conditions. It is connected via an 8-pole M12 plug-in connector.

The reader can process the high-speed RF300 transponders and the ISO-15693-compatible transponders (see RFID systems field data table on page 1/10).

Connectable antennas

One of each of the following antennas can be operated on an RF350R:

- ANT 1, universal flat antenna, also for dynamic applications, dimensions L x W x H (mm): 75 x 75 x 20
- Due to its slimline, compact design, the ANT 3 can still be precisely positioned even in cramped conditions. Dimensions L x W x H (mm): 50 x 28 x 10
- ANT 3S, same as ANT 3, except suitable exclusively for processing of MDS D117, MDS D127, MDS D421 and MDS D521 transponders. The dimensions are L x W x H (mm): 50 x 28 x 10.
- ANT 12, universal round antenna in M12 design for assembly lines with extremely small workpiece holders. Dimensions Ø x L (mm): M12 x 40
- ANT 18, universal round antenna in M18 design for assembly lines with small workpiece holders. Dimensions Ø x L (mm): M18 x 55
- ANT 30, universal round antenna for assembly lines with small workpiece holders. Dimensions Ø x L (mm): M30 x 58

Design

Connectable antennas	ANT 1	ANT 3	ANT 3S	ANT 12	ANT 18	ANT 30
See page	2/131	2/132	2/133	2/136	2/137	2/138
Inductive interface to the transponder	13.56 MHz					
Range, max	140 mm	45 mm	16 mm	16 mm	35 mm	55 mm

Minimum distance between antennas

RF350R with antenna	ANT 1	ANT 3	ANT 3S	ANT 12	ANT 18	ANT 30
Minimum distance (mm) from antenna to antenna (D)						
• ANT 1	800	-	-	-	-	-
• ANT 3	-	200	-	-	-	-
• ANT 3S	-	-	80	-	-	-
• ANT 12	-	-	-	80	-	-
• ANT 18	-	-	-	-	125	-
• ANT 30	-	-	-	-	-	200

© Siemens AG 2016

2

Technical specifications

Article number	**6GT2801-4AB10**
Product type designation	RF350R reader
Suitability for operation	RF300 and ISO 15693 transponders (MDS Dxxx), for connecting to communication modules
Wireless frequencies	
Operating frequency Rated value	13.56 MHz
Electrical data	
Range maximum	140 mm; Range is dependent on transponder type: observe
http://support.automation.siemens.com/WW/view/en/67384964	
Protocol with radio transmission	RF300-specific, ISO 15693, ISO 18000-3
Transfer rate with radio transmission maximum	106 kbit/s
Product feature multitag-capable	No
Transfer rate at the point-to-point connection serial maximum	115.2 kbit/s
Transmission time for user data	
• for write access per byte typical	0.13 ms
• for read access per byte typical	0.13 ms
Interfaces	
Number of external antennas	1
Standard for interfaces for communication	RS422
Type of electrical connection	
• for external antenna(s)	M8, 4-pin
• for communications interface	M12, 8-pin
Mechanical data	
Material	PA 12
Color	anthracite
Mounting distance relating to metal surfaces recommended minimum	0 mm
Supply voltage, current consumption, power loss	
Supply voltage	
• at DC Rated value	24 V
• at DC	20.4 ... 28.8 V
Consumed current at DC at 24 V	
• typical	0.1 A
Permitted ambient conditions	
Ambient temperature	
• during operation	-25 ... +70 °C
• during storage	-40 ... +85 °C
• during transport	-40 ... +85 °C
Protection class IP	IP65
Shock resistance	EN 60721-3-7, Class 7 M2
Shock acceleration	500 m/s²
Vibrational acceleration	200 m/s²
Design, dimensions and weight	
Width	75 mm
Height	41 mm
Depth	75 mm
Net weight	0.25 kg
Mounting type	2 x M5 screws
Cable length	
• of antenna cable fixed value	3 m
• for RS422 interface maximum	1 000 m

Article number	**6GT2801-4AB10**
Product type designation	RF350R reader
Product properties, functions, components general	
Display version	3-color LED
Product feature silicon-free	Yes
Standards, specifications, approvals	
Certificate of suitability	Wireless according to R&TTE guidelines EN 300 330, EN 301489, CE, FCC, UL/CSA, Ex: II 3G Ex nA nC IIB T5, II 3D Ex tD A22 IP6x T80°C
MTBF	140 y
Accessories	Various antennas are available

Selection and ordering data

	Article No.
SIMATIC RF350R reader Without antenna	**6GT2801-4AB10**
Antennas	
External antenna ANT 1 For RF350R reader, with antenna connecting cable (3 m, permanently connected to antenna ANT 1). See page 2/131.	**6GT2398-1CB00**
External antenna ANT 3 For RF350R reader, with antenna connecting cable (3 m, double ended (plug M8 straight / M8 angled)). See page 2/132.	**6GT2398-1CD40-0AX0**
External antenna ANT 3S For RF350R reader, with antenna connecting cable (3 m, double ended (plug M8 straight / M8 angled)). See page 2/133.	**6GT2398-1CD60-0AX0**
External antenna ANT 12 For RF350R readers, with antenna connecting cable. See page 2/136.	**6GT2398-1CC00**
External antenna ANT 18 For RF350R readers, with antenna connecting cable. See page 2/137.	**6GT2398-1CA00**
External antenna ANT 30 For RF350R readers, with antenna connecting cable. See page 2/138.	**6GT2398-1CD00**
Accessories	
Note: All connection options can be found in the chapter 5 "Communication Modules".	
DVD "RFID-Systems Software & Documentation"	**6GT2080-2AA20**

© Siemens AG 2016

Dimensional drawings

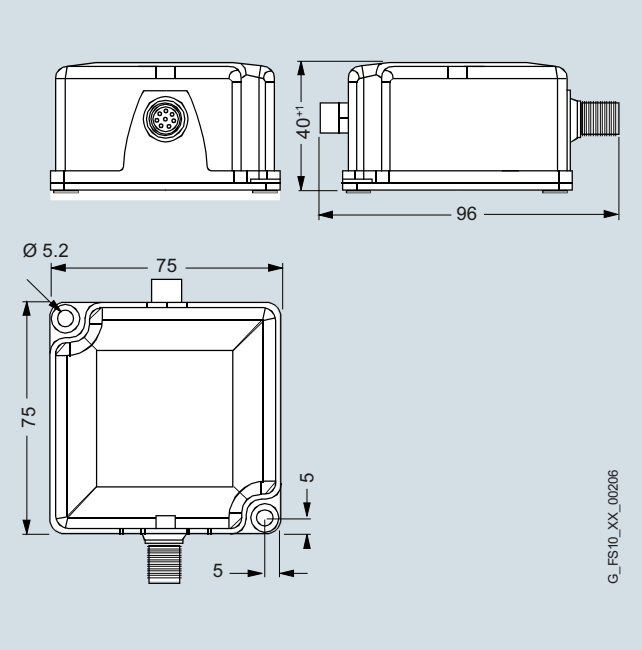

SIMATIC RF350R reader

More information

All current wireless approvals can be found on the Internet at:
http://www.siemens.com/rfid-approvals

© Siemens AG 2016

RF380R

Overview

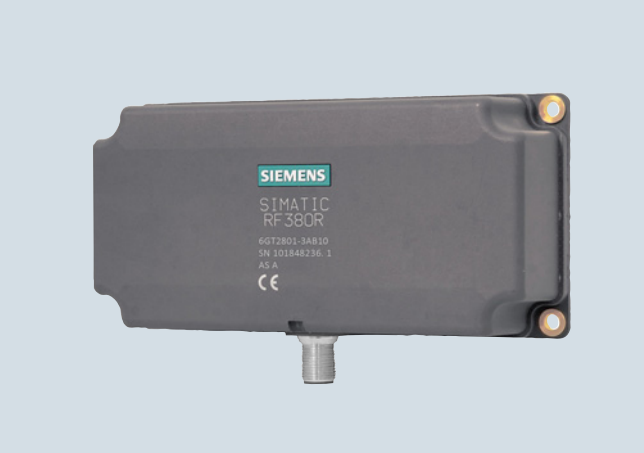

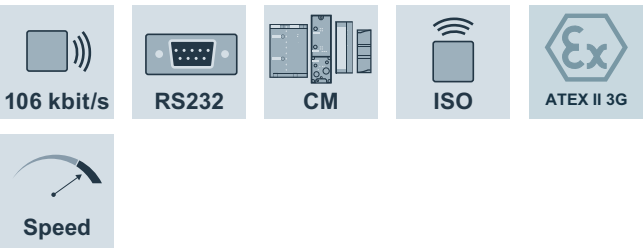

6GT2801-3AB10

SIMATIC RF380R is a reader with an integral antenna for the top-end performance range and its compact construction makes it ideal for use in assembly lines in which long ranges are required (e.g. bodyshop/paintshop in the automotive industry). This reader is also particularly suitable for dynamic applications, in which the transponder does not stop during the read/write process (e.g. baggage conveyors in airports).

This reader has both an RS422 and an RS232 interface with a 3964R transmission procedure for connection to RFID communication modules (see Communication modules) as well as to non-Siemens controllers or the PC.

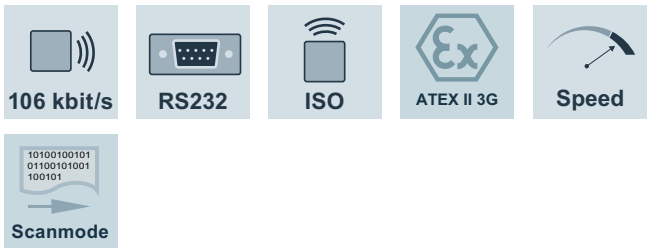

6GT2801-3AB20-0AX1

The RF380R is also available as a scan mode variant (automatic read mode, without command control). This automatic read-only mode does not require a special command control, but supplies the autonomously read transponder data directly to the connected host system.

Due to the high degree of protection and the use of high-quality materials, the SIMATIC RF380R facilitates problem-free operation even under the harshest industrial conditions. It is connected via an 8-pole M12 plug-in connector.

The reader can process the high-speed RF300 transponders and the ISO-15693-compatible transponders (see RFID systems field data table on page 1/10).

Design

Minimum distance from reader to reader	
SIMATIC RF380R	≥ 400 mm

© Siemens AG 2016

Technical specifications

Article number	**6GT2801-3AB10**	**6GT2801-3AB20-0AX1**
Product type designation	RF380R reader	RF380R reader (ISO scan mode)
Suitability for operation	RF300 and ISO 15693 transponders (MDS Dxxx), for connecting to communication modules and PC systems	RF300 and ISO 15693 transponders (MDS Dxxx), for serial connection to control systems (Scan Mode)
Wireless frequencies		
Operating frequency Rated value	13.56 MHz	13.56 MHz
Electrical data		
Range maximum	200 mm; Range adjustable in reader via transmission power, range is dependent on transponder type: observe http://support.automation.siemens.com/WW/view/en/67384964	200 mm
Protocol with radio transmission	RF300-specific, ISO 15693, ISO 18000-3	RF300-specific, ISO 15693, ISO 18000-3
Transfer rate with radio transmission maximum	106 kbit/s	106 kbit/s
Product feature multitag-capable	No	No
Transfer rate at the point-to-point connection serial maximum	115.2 kbit/s	115.2 kbit/s
Transmission time for user data		
• for write access per byte typical	0.13 ms	
• for read access per byte typical	0.13 ms	0.13 ms
Interfaces		
Standard for interfaces for communication	RS422/RS232	RS422/RS232
Type of electrical connection	M12, 8-pin	M12, 8-pin
Mechanical data		
Material	PA 12	PA 12
Color	anthracite	anthracite
Mounting distance relating to metal surfaces recommended minimum	0 mm	0 mm
Supply voltage, current consumption, power loss		
Supply voltage		
• at DC Rated value	24 V	24 V
• at DC	20.4 ... 28.8 V	20.4 ... 28.8 V
Consumed current at DC at 24 V		
• typical	0.16 A	0.16 A
Permitted ambient conditions		
Ambient temperature		
• during operation	-25 ... +70 °C	-25 ... +70 °C
• during storage	-40 ... +85 °C	-40 ... +85 °C
• during transport	-40 ... +85 °C	-40 ... +85 °C
Protection class IP	IP67	IP67
Shock resistance	EN 60721-3-7, Class 7 M2	EN 60721-3-7, Class 7 M2
Shock acceleration	500 m/s^2	500 m/s^2
Vibrational acceleration	200 m/s^2	200 m/s^2
Design, dimensions and weight		
Width	80 mm	80 mm
Height	41 mm	41 mm
Depth	160 mm	160 mm
Net weight	0.6 kg	0.6 kg
Mounting type	4 x M5 screws	4 x M5 screws
Cable length		
• with RS232 interface maximum	30 m	30 m
• for RS422 interface maximum	1 000 m	1 000 m
Product properties, functions, components general		
Display version	3-color LED	3-color LED
Product feature silicon-free	Yes	Yes
Standards, specifications, approvals		
Certificate of suitability	Wireless according to R&TTE guidelines EN 300 330, EN 301489, CE, FCC, UL/CSA,	Wireless according to R&TTE guidelines EN 300 330, EN 301489, CE, FCC, UL/CSA,
	Ex: II 3G Ex nC IIB T5	Ex: II 3G Ex nC IIB T5
MTBF	109 y	109 y

© Siemens AG 2016

2

Selection and ordering data

	Article No.
SIMATIC RF380R reader	
• RF300 and ISO15693 modes	**6GT2801-3AB10**
• scan mode	**6GT2801-3AB20-0AX1**

	Article No.
Accessories	
Note: All connection options can be found in section 5, "Communication Modules".	
RS232 connecting cable	
Between reader and PC (RS232), 5 m long, material: PUR, CMG approval.	
• 24 V connection with M12 plug	**6GT2891-4KH50**
• 24 V connection with open ends	**6GT2891-4KH50-0AX0**
DVD "RFID-Systems Software & Documentation"	**6GT2080-2AA20**

Dimensional drawings

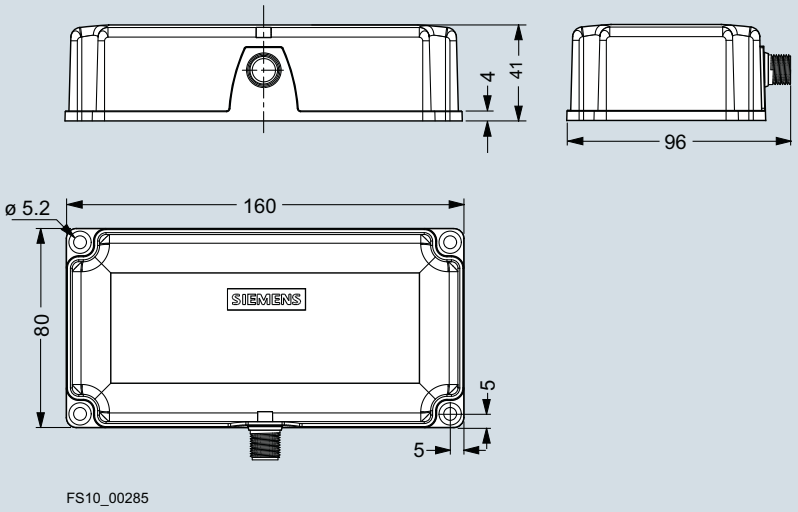

SIMATIC RF380R reader

More information

All current wireless approvals can be found on the Internet at:
http://www.siemens.com/rfid-approvals

© Siemens AG 2016

Overview

SIMATIC RF382R is a reader with an integral special antenna for the top-end performance range and its compact construction makes it ideal for implementation in conveyor systems in which transponders have to be read from the side (e.g. in the clothing industry or laundry applications). This reader is also particularly suitable for dynamic applications, in which the transponder does not stop during the read/write process.

The reader has both an RS422 interface and an RS232 interface with scan mode functionality. This automatic read-only mode does not require a special command control, but supplies the autonomously read transponder data directly to the connected host system.

Due to the high degree of protection and the use of high-quality materials, the SIMATIC RF382R facilitates problem-free operation even under the harshest industrial conditions. It is connected via an 8-pole M12 plug-in connector.

The reader can process the high-speed RF300 transponders and the ISO-15693-compatible transponders (see RFID systems field data table on page 1/10).

Design

Minimum distance from reader to reader	
SIMATIC RF382R	≥ 200 mm

Technical specifications

Article number	6GT2801-3AB20-0AX0
Product type designation	RF382R reader
Suitability for operation	RF300 and ISO 15693 transponders (MDS Dxxx), lateral antenna field, for serial connection to control systems (Scan Mode)
Wireless frequencies	
Operating frequency Rated value	13.56 MHz
Electrical data	
Range maximum	75 mm; Range adjustable in reader via transmission power, range is dependent on transponder type: observe
http://support.automation.siemens.com/WW/view/en/67384964	
Protocol with radio transmission	RF300-specific, ISO 15693, ISO 18000-3
Transfer rate with radio transmission maximum	106 kbit/s
Product feature multitag-capable	No
Transfer rate at the point-to-point connection serial maximum	115.2 kbit/s
Transmission time for user data	
• for read access per byte typical	0.13 ms
Interfaces	
Standard for interfaces for communication	RS422/RS232
Type of electrical connection	M12, 8-pin
Mechanical data	
Material	PA 12
Color	anthracite
Mounting distance relating to metal surfaces recommended minimum	0 mm

Article number	6GT2801-3AB20-0AX0
Product type designation	RF382R reader
Supply voltage, current consumption, power loss	
Supply voltage	
• at DC Rated value	24 V
• at DC	20.4 ... 28.8 V
Consumed current at DC at 24 V	
• typical	0.16 A
Permitted ambient conditions	
Ambient temperature	
• during operation	-25 ... +70 °C
• during storage	-40 ... +85 °C
• during transport	-40 ... +85 °C
Protection class IP	IP67
Shock resistance	EN 60721-3-7, Class 7 M2
Shock acceleration	500 m/s²
Vibrational acceleration	200 m/s²

© Siemens AG 2016

RF382R

Article number	**6GT2801-3AB20-0AX0**
Product type designation	RF382R reader
Design, dimensions and weight	
Width	80 mm
Height	41 mm
Depth	160 mm
Net weight	0.6 kg
Mounting type	4 x M5 screws
Cable length	
• with RS232 interface maximum	30 m
• for RS422 interface maximum	1 000 m
Product properties, functions, components general	
Display version	3-color LED
Product feature silicon-free	Yes
Standards, specifications, approvals	
Certificate of suitability	Wireless according to R&TTE guidelines EN 300 330, EN 301489, CE, FCC, UL/CSA
MTBF	109 y
Accessories	
Accessories	RS232 connecting cables

Selection and ordering data

	Article No.
SIMATIC RF382R reader RF300 and ISO15693 modes.	**6GT2801-3AB20-0AX0**
Accessories	
RS232 connecting cable Between reader and PC (RS232), 5 m long, material: PUR, CMG approval.	
• 24 V connection with M12 plug	**6GT2891-4KH50**
• 24 V connection with open ends	**6GT2891-4KH50-0AX0**
DVD "RFID-Systems Software & Documentation"	**6GT2080-2AA20**

Dimensional drawings

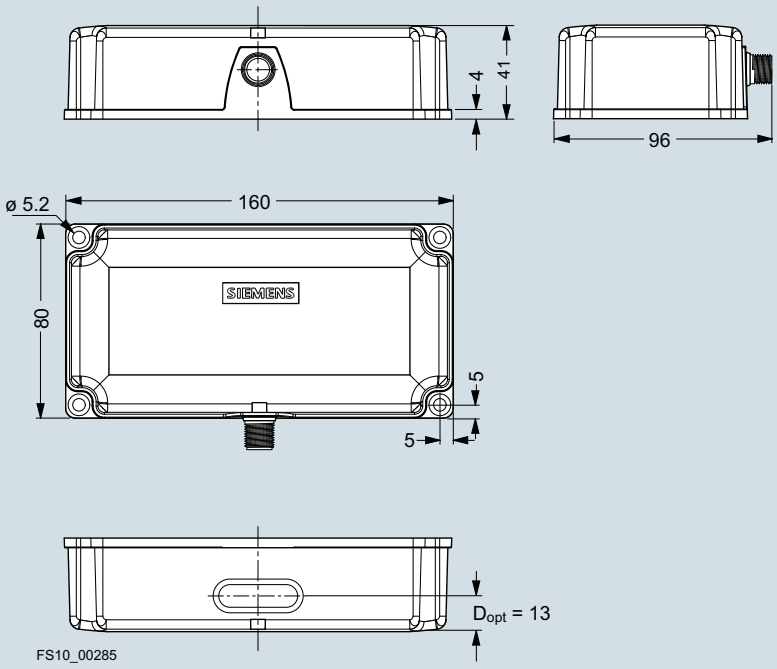

SIMATIC RF382R reader

© Siemens AG 2016

Overview

The SIMATIC RF350M is a powerful mobile handheld terminal for applications in the field of production logistics, distribution and service. In addition, it is an indispensable tool for commissioning and testing. The RF350M is equipped either with an integral antenna or with a socket for connecting external antennas.

Design

The SIMATIC RF350M mobile handheld terminal consists of a basic unit (Basis Nordic ID Merlin) and an integrated read/write device for RF300 transponders and transponders of the MDS D-family according to the ISO15693 standard. The read/write device is equipped either with an integrated antenna or with a socket for connecting external antennas.

The SIMATIC RF350M has a splash-proof enclosure (IP54), a color QVGA color touchscreen with a resolution of 320 x 240 pixels, TFT portrait format, an alphanumeric keyboard and various interfaces e.g. for SD memory cards, battery charging and WLAN.

Integral read/write unit, inductive interface to transponder	**For SIMATIC RF300 / RF200, MOBY D (ISO)**
Read/write distance to the transponder (with integrated antenna)	• RF300: up to 50 mm • ISO: up to 80 mm
Read/write distance to the transponder (with external antenna)	• RF300: up to 30 mm • ISO: up to 60 mm
Energy/data transmission frequency	13.56 MHz
Serial interface (internal, to basic unit)	RS232, 3964R protocol
Functionality of the software application	Standard user interface for reading/writing of transponders, etc.

Function

The supplied and pre-installed software provides the following service and test functions for RF300 and MDS Dxxx transponders[1]:

- Reading data from the transponder
- Writing data to the transponder
- Reading and displaying the ID number of the transponder
- Displaying and editing the data in hexadecimal, ASCII, decimal and binary formats

Based on the operating system and communication standard (WIN CE), the unit ensures simple integration into existing or planned infrastructures. Various optional development tools for the PC and a wide selection of accessories are available.

Connectable antennas

One of each of the following antennas can be operated on a SIMATIC RF350M for external antennas:

- ANT 3,
  Dimensions L x W x H (mm): 28 x 50 x 10
- ANT 3S,
  Dimensions L x W x H (mm): 28 x 50 x 10
- ANT 8,
  Dimensions ∅ x L (mm): M8 x 38
- ANT 12,
  Dimensions ∅ x L (mm): M12 x 40
- ANT 18,
  Dimensions ∅ x L (mm): M18 x 55
- ANT 30,
  Dimensions ∅ x L (mm): M30 x 58

[1] Exception: The MDS D421, MDS D422, MDS D127 and MDS D117 transponders can only be operated with the SIMATIC RF350M mobile handheld terminal with external antenna..

© Siemens AG 2016

2

Technical specifications

Article number	**6GT2803-1BA00**	**6GT2803-1BA10**
Product type designation	RF350M mobile hand-held terminal	RF350M mobile hand-held terminal for external antenna
Suitability for operation	RF300- and RF200/ISO 15693 transponders	RF300- and RF200/ISO 15693 transponders, in particular for small transponders
Range	80 mm	80 mm
Range note		dependent of the type of external antenna
Wireless frequencies		
Operating frequency Rated value	13.56 MHz	13.56 MHz
Electrical data		
Protocol with radio transmission	RF300-specific, ISO 15693, ISO 18000-3	RF300-specific, ISO 15693, ISO 18000-3
Transfer rate with radio transmission maximum	106 kbit/s	106 kbit/s
Product feature multitag-capable	No	No
Supply voltage, current consumption, power loss		
Type of current supply	Battery operation or mains operation via docking station	Battery operation or mains operation via docking station
Type of battery	Lithium ion accumulator, fast charging capability	Lithium ion accumulator, fast charging capability
Type of battery as back-up battery Integrated	Lithium ion battery, permanently installed, cannot be replaced by customer	Lithium ion battery, permanently installed, cannot be replaced by customer
Battery capacity	2.6 Ah	2.6 Ah
Operating period with standard battery typical	8 h	8 h
Permitted ambient conditions		
Ambient temperature		
• during operation	-20 ... +55 °C	-20 ... +55 °C
• during storage	-20 ... +60 °C	-20 ... +60 °C
Relative humidity at 25 °C without condensation during operation maximum	95 %	95 %
Height of fall maximum	1.2 m	1.2 m
Protection class IP	IP54	IP54
Design, dimensions and weight		
Width	90 mm	90 mm
Height	250 mm	250 mm
Depth	47 mm	47 mm
Net weight	0.6 kg	0.6 kg
Product properties, functions, components general		
Design of the display	QVGA color touch screen 3.5 inch, 240 x 320 pixels	QVGA color touch screen 3.5 inch, 240 x 320 pixels
Operator element version	Alphanumeric	Alphanumeric
Design of acoustic signaling element	Speakers	Speakers
Design of the interface	WLAN, USB and Ethernet via charging station	WLAN, USB and Ethernet via charging station
Storage capacity		
• of the RAM	256 Mibyte	256 Mibyte
• of the data and program memory	288 Mibyte	288 Mibyte
• of the data memory can be used	256 Mibyte	256 Mibyte
Product functions management, configuration		
Operating system pre-installed	Windows Embedded CE 6.0	Windows Embedded CE 6.0
Product function of the software	RF350M.exe for execution of RF300 and ISO15693 (RF200, MOBY D) transponders	RF350M.exe for execution of RF300 and ISO15693 (RF200, MOBY D) transponders
Standards, specifications, approvals		
Certificate of suitability	EMC: EN 55022, EN 301 489, EN 300 330, EN 300 328, EN 301 893, safety: EN 60950	EMC: EN 55022, EN 301 489, EN 300 330, EN 300 328, EN 301 893, safety: EN 60950
Accessories		
Accessories	Charging/docking station with USB- and Ethernet interface, changeable accumulator Li-ion 2600 mAh / 7.4 V	Charging/docking station with USB- and Ethernet interface, changeable accumulator Li-ion 2600 mAh / 7.4 V external antenna ANT 3, ANT 3S, ANT 8, ANT 12, ANT 18, ANT 30

© Siemens AG 2016

Selection and ordering data

	Article No.
SIMATIC RF350M mobile handheld terminal	
• Basic unit with integrated RFID read/write unit (RF300 and ISO 15693), integrated antenna, battery, standard software pre-installed, without charging/docking station.	**6GT2803-1BA00**
• Basic unit with integrated RFID read/write unit (RF300 and ISO 15693), for external antennas, battery, standard software pre-installed, without charging/docking station, without external antenna.	**6GT2803-1BA10**
External antennas for 6GT2803-1BA10	
External antenna ANT 3 For RF350M mobile handheld terminal (6GT2803-1BA10), without antenna connecting cable. See page 2/132.	**6GT2398-1CD30-0AX0**
External antenna ANT 3S For RF350M mobile handheld terminal (6GT2803-1BA10), without antenna connecting cable. See page 2/133.	**6GT2398-1CD50-0AX0**
External antenna ANT 8 For RF350M mobile handheld terminal (6GT2803-1BA10), without antenna connecting cable. See page 2/134.	**6GT2398-1CF00**
Antenna adapter for ANT 3, ANT 3S and ANT 8 For direct connection of ANT 3, ANT 3S and ANT 8 to RF350M (6GT2803-1BA10).	
• Length 0.1 m	**6GT2898-0EA00**
• Length 3 m	**6GT2391-0AH30**
External antenna ANT 12 For RF350M mobile handheld terminal, with antenna connecting cable. See page 2/136.	**6GT2398-1CC00**
External antenna ANT 18 For RF350M mobile handheld terminal, with antenna connecting cable. See page 2/137.	**6GT2398-1CA00**
External antenna ANT 30 For RF350M mobile handheld terminal, with antenna connecting cable. See page 2/138.	**6GT2398-1CD00**

	Article No.
Accessories Note: All connection options can be found in Chapter 5, "Communication Modules".	
Charging/docking station For a mobile handheld terminal as well as a spare battery, including wide-range plug-in power supply 100 to 240 V AC and country-specific adapters as well as USB cable.	**6GT2803-0BM00**
Spare battery For basic device, 2600 mAh, Li-ion batteries.	**6GT2803-0CA00**
DVD „RFID-Systems Software & Documentation“	**6GT2080-2AA20**

Dimensional drawings

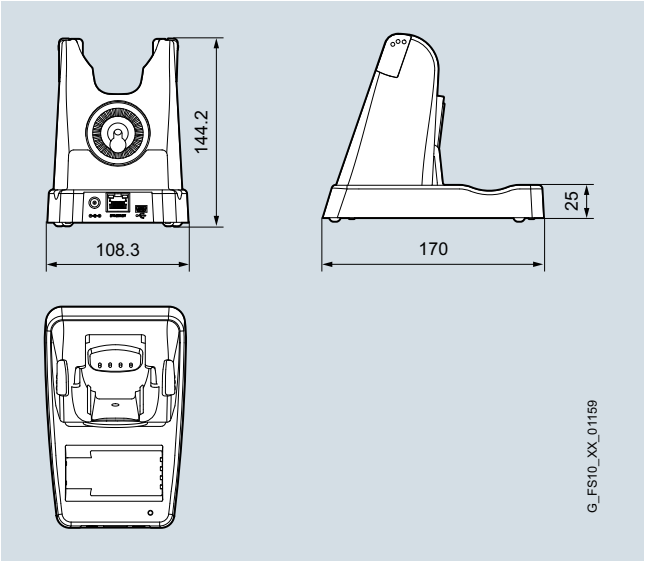

Docking station for SIMATIC RF350M handheld terminal

More information

All current wireless approvals can be found on the Internet at:
http://www.siemens.com/rfid-approvals

© Siemens AG 2016

2

Overview

The MOBY D RFID system is particularly suitable for use in industrial production in the areas of production control, asset management and tracking & tracing.

MOBY D is used for implementing identification tasks with medium performance (ISO 15693) in the HF range (13.56 MHz).

MOBY D offers a comprehensive portfolio of ISO 15693 transponders for a whole variety of requirements - from low-cost SmartLabels for simple identification tasks through rugged credit card formats, right up to transponders for use in especially harsh environments such as paint shops or in the laundry and cleaning industry.

The communication modules that can be used for all MOBY and SIMATIC RF systems (ASM 456, ASM 475, SIMATIC RF1xxC) are available for connecting to SIMATIC S7-300, PROFIBUS, PROFINET and TCP/IP (XML).

Depending on the read/write distance, different readers are available with integrated or remote antennas.

The MOBY D identification system boasts the following performance features:

- 13.56 MHz operating frequency.
- Operation according to ISO 15693.
- Passive (without battery), maintenance-free transponder (MDS Dxxx) with memory of up 2 000 bytes FRAM.
- Rugged, compact components with IP68 / IPx9K degree of protection.
- Simple integration in SIMATIC, PROFIBUS, PROFINET and TCP/IP with the help of tried and tested function blocks (FC 45, FB 45).

Benefits

get Designed for Industry

- High-performance reader with bulk detection capability and a range of up to 0.35 m.
- Cost-effective and battery-free ISO 15963 transponders up to 2 KB with IP68 degree of protection and 220 °C temperature range, with ATEX approval.
- Flexible and economic solutions thanks to the complete and scalable portfolio for the field of industrial identification.
- Simplified engineering, commissioning, diagnostics and maintenance through seamless integration into Totally Integrated Automation (TIA):
  - Integrated bus connection to an automation system, such as SIMATIC, SIMOTION or SINUMERIK via communication modules with PROFIBUS and PROFINET.
  - Simple S7 software integration via ready-to-use function blocks.
- High security of investment thanks to:
  - Open ISO 15693 standard.
  - Software compatibility between the RFID systems of Siemens.
  - Standardized communication interfaces.
- Openness through connection possibilities to different bus systems from different manufacturers and PC environments via communication modules.
- Worldwide Service and Support.

Application

- High-performance reader with bulk detection capability and a range of up to 0.35 m.
- Cost-effective and battery-free ISO 15963 transponders up to 2 KB with IP68 degree of protection and 220 °C temperature range, with ATEX approval.
- Flexible and economic solutions thanks to the complete and scalable portfolio for the field of industrial identification.
- Simplified engineering, commissioning, diagnostics and maintenance through seamless integration into Totally Integrated Automation (TIA):
  - Integrated bus connection to an automation system, such as SIMATIC, SIMOTION or SINUMERIK via communication modules with PROFIBUS and PROFINET.
  - Simple S7 software integration via ready-to-use function blocks.
- High security of investment thanks to:
  - Open ISO 15693 standard.
  - Software compatibility between the RFID systems of Siemens.
  - Standardized communication interfaces.
- Openness through connection possibilities to different bus systems from different manufacturers and PC environments via communication modules.
- Worldwide Service and Support.

Design

The MOBY D readers are available in different designs. In addition to the SLG D12 and SLG D12S readers with integrated antennas, the SLG D11 and SLG D11S readers permit the connection of various external antennas with which extended ranges of up to 380 mm can be achieved.

The high degree of protection of up to IP65 enables the MOBY D readers to be used in harsh, industrial environments.

The interface to the automation level can be implemented by means of communication modules. For quick and easy cabling, pre-assembled cables with M12 plug-in connectors are available in various lengths.

The MOBY D transponders compliant with ISO 15693 are used as mobile data carriers.

Transponders suitable for a wide variety of different requirements can be selected from an extensive range: From low-cost SmartLabels for simple identification tasks, through rugged credit card formats, right up to screw-fit transponders that can be automatically attached by robots.

The transponders are attached to the object to be identified, e.g. by means of screws, adhesive or pre-assembled spacer.

© Siemens AG 2016

Function

All MOBY D readers are suitable for reliable reading and writing tasks in the HF range.

The readers are equipped either with an RS232 interface for the connection to the PC or to SIMATIC S7-1200 or with an RS422 interface for the connection via communication modules to the automation level (e.g. SIMATIC S7) via standard fieldbuses (e.g. PROFIBUS or PROFINET).

User-friendly function blocks are available for the S7 programming.

In the event of an error, the S7 application receives a detailed error message from the communication module via the function block.

Integration

A wide range of communication modules, function blocks, as well as high-performance drivers and function libraries permits easy and quick integration into the application.

And best of all: MOBY D is part of Totally Integrated Automation (TIA) and can be integrated easily and cost-effectively into the SIMATIC world.

For more details on the connection possibilities, see the section 5 "Communication Modules".

SIMATIC Ident Configuration Guide

Here is a compact configuration tool for setting up RFID systems:

http://support.automation.siemens.com/WW/view/en/67384964

Technical specifications

RFID system	MOBY D
Transmission frequency	13.56 MHz
Range	Max. 380 mm
Protocol (air interface)	• ISO 15693 • ISO 18000-3
Approvals	• EN 300330, 301489, CE • FCC Part 15 • UL/CSA
Memory capacity	992 bytes (EEPROM) / 2 000 bytes (FRAM)
Data transmission rate reader – transponder	
• Read	Max. 1.5 kbyte/s
• Write	Max. 0.5 kbyte/s
Multitag/Bulk capability	Yes
Special features	• SIMATIC or PC/IT integration • Long sensing ranges with excellent interference immunity • External antennas for industrial applications

© Siemens AG 2016

2

Overview

Readers	Features	Page
SLG D11 basic unit	Reader for connection of an external antenna (ANT D2 / ANT D5). With RS232 interface for connection to PC/PLC.	2/123
SLG D11S basic unit	Like SLG D11, but with RS422 interface for connection to SIMATIC S7 / PROFIBUS / PROFINET / Ethernet TCP/IP via ASM 456, ASM 475, SIMATIC RF120C, RF160C, RF170C, RF180C or RF182C.	2/123

Readers	Features	Page
SLG D12	Universal reader with integrated antenna. With RS232 interface for connection to PC/PLC.	2/126
SLG D12S	Like SLG D12, but with RS422 interface for connection to SIMATIC S7 / PROFIBUS / PROFINET / Ethernet TCP/IP via ASM 456, ASM 475, SIMATIC RF120C, RF160C, RF170C, RF180C or RF182C.	2/126

© Siemens AG 2016

Overview

6GT2698-1AC00

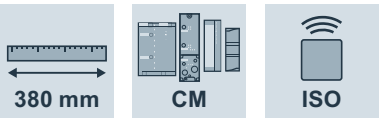

6GT2698-2AC00

The SLG D11/SLG D11S basic units are readers in the mid-performance range and can be operated with the ANT D2 and ANT D5 antennas.

SLG D11

Equipped with RS232 serial interface for connection to PC/PLC.

SLG D11S

Equipped with an RS422 serial interface, which permits communication via the communication modules ASM 456, ASM 475, SIMATIC RF120C, RF160C, RF170C and SIMATIC RF180C, or RF182C to SIMATIC S7, PROFIBUS/PROFINET or Ethernet TCP/IP.

Connectable antennas

ANT D2

The ANT D2 antenna is designed for transponders that are directed sideways past the antenna. This antenna is specially designed for high speeds, e.g. in overhead conveyors, assembly lines, production and order picking. It can be mounted directly onto metal surfaces. Description see page 2/140.

ANT D5

The ANT D5 is a universal antenna designed for warehouse, logistics and distribution applications. The high degree of protection (IP65) enables the antenna to be used under harsh industrial conditions. A spacer kit is required for mounting on metal surfaces. Description see page 2/141.

Technical specifications

Article number	**6GT2698-1AC00**	**6GT2698-2AC00**
Product type designation	SLG D11 reader	SLG D11S reader
Suitability for operation	ISO 15693 transponders (MDS Dxxx), for connecting to PC systems	ISO 15693 transponders (MDS Dxxx), for connecting to communication modules
Wireless frequencies		
Operating frequency Rated value	13.56 MHz	13.56 MHz
Electrical data		
Range maximum	380 mm; Range is dependent on transponder type: observe http://support.automation.siemens.com/WW/view/en/67384964	
Protocol with radio transmission	ISO 15693, ISO 18000-3	ISO 15693, ISO 18000-3
Transfer rate with radio transmission maximum	26.5 kbit/s	26.5 kbit/s
Product feature multitag-capable	Yes	No
Transfer rate at the point-to-point connection serial maximum	38.4 kbit/s	19.2 kbit/s
Transmission time for user data		
• for write access per byte typical	2.5 ms	2.5 ms
• for read access per byte typical	2.5 ms	2.5 ms
Interfaces		
Number of external antennas	1	1
Standard for interfaces for communication	RS232	RS422
Type of electrical connection		
• for external antenna(s)	TNC	TNC
• for supply voltage	M12, 4-pin, female connector	M12, 4-pin, female connector
• for communications interface	Sub-D, 9-pin, male	Sub-D, 9-pin, male
Mechanical data		
Material	PA 12	PA 12
Color	anthracite	anthracite
Tightening torque of the screw for securing the equipment maximum	2 Nm	2 Nm
Mounting distance relating to metal surfaces recommended minimum	0 mm	0 mm

© Siemens AG 2016

SLG D11/SLG D11S basic unit for ANT D2 and ANT D5 antennas

Article number	**6GT2698-1AC00**	**6GT2698-2AC00**
Product type designation	SLG D11 reader	SLG D11S reader
Supply voltage, current consumption, power loss		
Supply voltage		
• at DC Rated value	24 V	24 V
• at DC	20 ... 30 V	20 ... 30 V
Consumed current at DC at 24 V		
• typical	0.2 A	0.2 A
• maximum	0.6 A	0.6 A
Permitted ambient conditions		
Ambient temperature		
• during operation	-25 ... +55 °C	-25 ... +55 °C
• during storage	-25 ... +70 °C	-25 ... +70 °C
• during transport	-25 ... +70 °C	-25 ... +70 °C
Protection class IP	IP65	IP65
Shock resistance	EN 60721-3-7 Class 7 M2	EN 60721-3-7 Class 7 M2
Shock acceleration	300 m/s^2	300 m/s^2
Vibrational acceleration	15 m/s^2	15 m/s^2
Design, dimensions and weight		
Width	80 mm	80 mm
Height	40 mm	40 mm
Depth	160 mm	160 mm
Net weight	0.26 kg	0.26 kg
Mounting type	2 x M5 screws	2 x M5 screws
Cable length		
• of antenna cable minimum	3.3 m	3.3 m
• of antenna cable maximum	10.5 m	10.5 m
• with RS232 interface maximum	30 m	
• for RS422 interface maximum		300 m
Standards, specifications, approvals		
Certificate of suitability	CE, FCC, IC (Canada), UL 60950, safe for cardiac pacemakers	CE, FCC, IC (Canada), UL 60950, safe for cardiac pacemakers
MTBF	23 y	23 y
Accessories		
Accessories	Various antennas are available, Wide-range power supply, connectors and cables	Various antennas are available Wide-range power supply, connectors and cables

© Siemens AG 2016

Selection and ordering data

	Article No.
SLG D11 reader Basic unit (without antenna) with RS232 serial interface for connection to PC/PLC.	**6GT2698-1AC00**
SLG D11S reader Basic unit (without antenna) with RS422 serial interface for connection to SIMATIC S7/PROFIBUS/PROFINET via communication module.	**6GT2698-2AC00**
Accessories Note: All connection options can be found in section 5, "Communication Modules".	
Antenna ANT D2 For SLG D11 / SLG D11S basic units, incl. antenna cable, PVC, length 3.3 m. See page 2/140.	**6GT2698-5BB00**
Antenna ANT D5 For SLG D11 / SLG D11S basic units. See page 2/141.	**6GT2698-5AA10**
Wide-range power supply 100 V ... 240 V AC / 24 V DC, 3 A With no-load protection, with continuous short-circuit protection	
• With EU plug	**6GT2898-0AA00**
• With UK plug	**6GT2898-0AA10**
• With US plug	**6GT2898-0AA20**
Connecting cable for 24 V DC For wide-range power supply, PUR, length 5 m. 	**6GT2491-1HH50**
24 V connector (M12 socket) For SLG D1x reader. 	**6GT2390-1AB00**
RS232 cable for SLG D11, PUR 	
5 m	**6GT2691-4BH50**
20 m	**6GT2691-4BN20**
DVD „RFID-Systeme Software & Dokumentation“	**6GT2080-2AA20**

Dimensional drawings

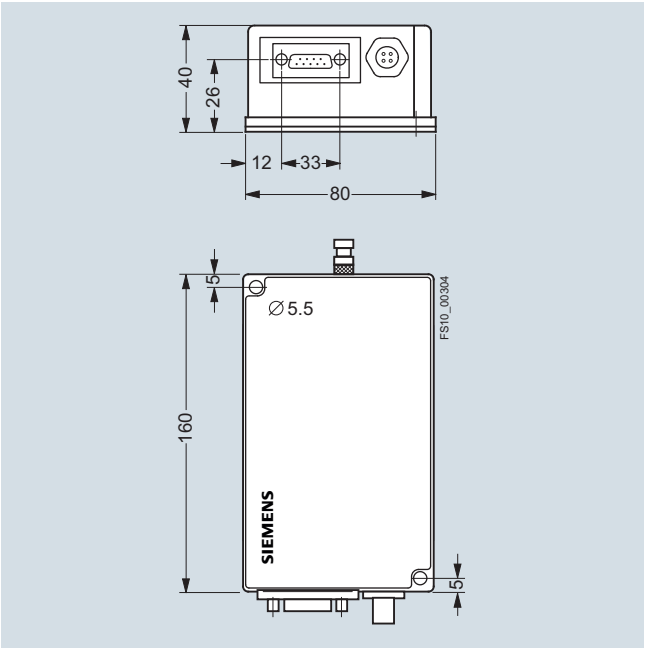

SLG D11 / SLG D11S reader - basic unit

More information

All current wireless approvals can be found on the Internet at:

http://www.siemens.com/rfid-approvals

© Siemens AG 2016

SLG D12 / SLG D12S

Overview

6GT2601-0AB00

6GT2602-0AB00 and
6GT2602-0AB10-0AX0

The SLG D12 / SLG D12S basic devices are universal readers in the medium performance range with integral antennas.

SLG D12

Equipped with RS232 serial interface for connection to PC/PLC.

SLG D12S

Equipped with an RS422 serial interface, which permits communication via the communication modules ASM 456, ASM 475, SIMATIC RF120C, RF160C, RF170C and SIMATIC RF180C, or RF182C to SIMATIC S7, PROFIBUS/PROFINET or Ethernet TCP/IP.

Technical specifications

Article number	**6GT2601-0AB00**	**6GT2602-0AB00**	**6GT2602-0AB10-0AX0**
Product type designation	SLG D12 reader	SLG D12S reader	SLG D12S reader
Suitability for operation	ISO 15693 transponders (MDS Dxxx), for connecting to PC systems	ISO 15693 transponders (MDS Dxxx), for connecting to communication modules	ISO 15693 transponders (MDS Dxxx), for connecting to communication modules
Wireless frequencies			
Operating frequency Rated value	13.56 MHz	13.56 MHz	13.56 MHz
Electrical data			
Range maximum	220 mm; Range is dependent on transponder type: observe http://support.automation.siemens.com/WW/view/en/67384964		
Protocol with radio transmission	ISO 15693, ISO 18000-3	ISO 15693, ISO 18000-3	ISO 15693, ISO 18000-3
Transfer rate with radio transmission maximum	26.5 kbit/s	26.5 kbit/s	26.5 kbit/s
Product feature multitag-capable	Yes	No	No
Transfer rate at the point-to-point connection serial maximum	38.4 kbit/s	19.2 kbit/s	19.2 kbit/s
Transmission time for user data			
• for write access per byte typical	2.5 ms	2.5 ms	2.5 ms
• for read access per byte typical	2.5 ms	2.5 ms	2.5 ms
Interfaces			
Standard for interfaces for communication	RS232	RS422	RS422
Type of electrical connection	Data: Sub-D, 9-pin, male, voltage: M12, 4-pin, female connector	Data: Sub-D, 9-pin, male, voltage: M12, 4-pin, female connector	M12, 8-pin
Mechanical data			
Material	PA 12	PA 12	PA 12
Color	anthracite	anthracite	anthracite
Tightening torque of the screw for securing the equipment maximum	2 Nm	2 Nm	2 Nm
Mounting distance relating to metal surfaces recommended minimum	0 mm	0 mm	0 mm
Supply voltage, current consumption, power loss			
Supply voltage			
• at DC Rated value	24 V	24 V	24 V
• at DC	20 ... 30 V	20 ... 30 V	20 ... 30 V
Consumed current at DC at 24 V			
• typical	0.15 A	0.15 A	0.15 A
• maximum	0.6 A	0.6 A	0.6 A

© Siemens AG 2016

Article number	6GT2601-0AB00	6GT2602-0AB00	6GT2602-0AB10-0AX0
Product type designation	SLG D12 reader	SLG D12S reader	SLG D12S reader
Permitted ambient conditions			
Ambient temperature			
• during operation	-25 ... +55 °C	-25 ... +55 °C	-25 ... +55 °C
• during storage	-25 ... +70 °C	-25 ... +70 °C	-25 ... +70 °C
• during transport	-25 ... +70 °C	-25 ... +70 °C	-25 ... +70 °C
Protection class IP	IP65	IP65	IP65
Shock resistance	EN 60721-3-7 Class 7 M2	EN 60721-3-7 Class 7 M2	EN 60721-3-7 Class 7 M2
Shock acceleration	300 m/s²	300 m/s²	300 m/s²
Vibrational acceleration	15 m/s²	15 m/s²	15 m/s²
Design, dimensions and weight			
Width	80 mm	80 mm	80 mm
Height	40 mm	40 mm	40 mm
Depth	160 mm	160 mm	160 mm
Net weight	0.23 kg	0.23 kg	0.23 kg
Mounting type	2 x M5 screws	2 x M5 screws	2 x M5 screws
Cable length			
• with RS232 interface maximum	30 m		
• for RS422 interface maximum		300 m	300 m
Standards, specifications, approvals			
Certificate of suitability	CE, FCC, IC (Canada), UL 60950, safe for cardiac pacemakers	CE, FCC, IC (Canada), UL 60950, safe for cardiac pacemakers	CE, FCC, IC (Canada), UL 60950, safe for cardiac pacemakers
MTBF	23 y	23 y	23 y
Accessories			
Accessories	Wide-range power supply, connectors, cables	Wide-range power supply, connectors, cables	Wide-range power supply, connectors, cables

Selection and ordering data

	Article No.
SLG D12 reader With RS232 serial interface and integrated antenna.	**6GT2601-0AB00**
SLG D12S reader With RS422 serial interface and integrated antenna for connection to SIMATIC S7 / PROFIBUS / PROFINET or Ethernet TCP/IP.	**6GT2602-0AB00**
SLG D12S reader, for single-cable connection With RS422 serial interface and integrated antenna. Only one connector for data and voltage supply. Power supply via communication module. Connector: M12, 8-pin (male)	**6GT2602-0AB10-0AX0**
Accessories Note: All connection options can be found in section 5, "Communication Modules".	
RS232 connecting cable Between PC and SLG D12, PUR.	
5 m	**6GT2691-4BH50**
20 m	**6GT2691-4BN20**

	Article No.
Connector for reader IP65 degree of protection, 9-pin Sub-D connector.	**6GT2490-1AA00**
Wide-range power supply Primary side: AC 100 ... 240 V, secondary side: 24 V DC, 3 A, with no-load protection and continuous short-circuit protection.	
• EU connector version	**6GT2898-0AA00**
• UK connector version	**6GT2898-0AA10**
• US connector version	**6GT2898-0AA20**
Cable for wide-range power supply 24 V DC, PUR, length 5 m.	**6GT2491-1HH50**
24 V connector (M12 socket) for SLG D1x readers	**6GT2390-1AB00**
DVD „RFID-Systems Software & Documentation“	**6GT2080-2AA20**

© Siemens AG 2016

Dimensional drawings

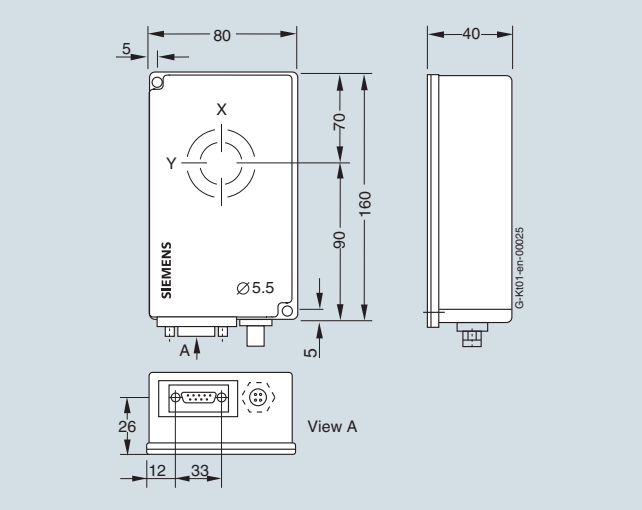

SLG D12 / SLG D12S reader, basic unit

More information

All current wireless approvals can be found on the Internet at:
http://www.siemens.com/rfid-approvals

© Siemens AG 2016

Overview

Note

Detailed configuration and commissioning data is contained in the “Manual for Configuration, Assembly and Service”.

Transmission window

The reader generates an inductive alternating field. The field is at its strongest near the antenna and declines considerably as the distance from the antenna increases. The distribution of the field depends on the structure and geometry of the antennas in the reader and transponder.

A prerequisite for the function of the transponder is a minimum field strength at the transponder that is achieved at a distance S_g from the reader. The picture below shows the transmission window between the transponder and reader:

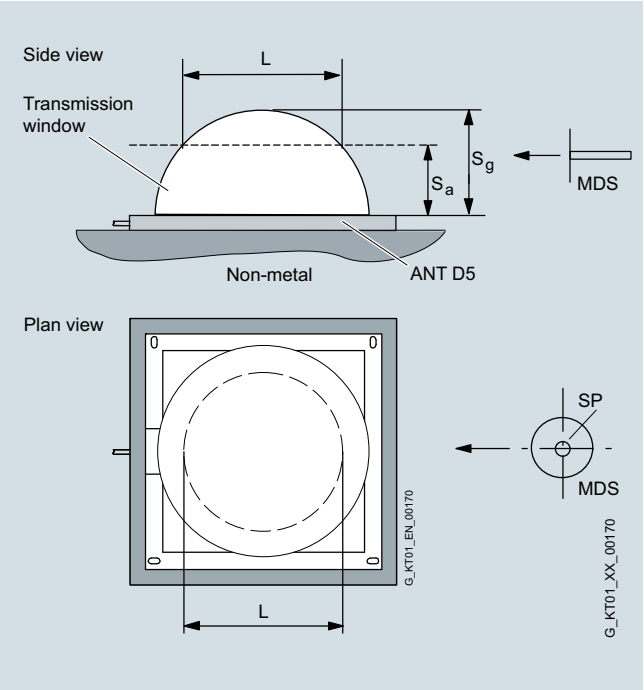

S_a: Operating distance between transponder and reader

S_g: Limit distance (maximum clear distance between upper surface of antenna and transponder, at which the transmission can still function under normal conditions)

L: Length of a transmission window

SP: Intersection of the axes of symmetry of the transponder

The transmittable quantity of information between reader and transponder depends on:

- the speed at which the transponder passes the antenna ("passing speed")
- Length of the inductive alternating field of the reader, through which the transponder moves ("transmission window").

Communication between reader and transponder

Communication between the reader and transponder is asynchronous.

Data transfer, reader - transponder	
Read	≥ 3.5 ms/byte
Write	≥ 9.5 ms/byte (EEPROM)
Transmission time of ID number	
• SLG D12S ANT D5, ANT D6, ANT D10	90 ms (8 bytes at 19.2 Kbit/s)
• SLG D11S ANT D5	
• SLG D12 ANT D5, ANT D6, ANT D10	60 ms (8 bytes at 38.4 Kbit/s)
• SLG D11 ANT D5	

Traversing speed for SLG D1x / ANT Dx (with one transponder in the field)

Reader	**SLG D11**		**SLG D12**	**SLG D11S**		**SLG D12S**
Antenna	**ANT D2**	**ANT D5**		**ANT D2**	**ANT D5**	
UID number (8 bytes)	≤ 1.2	≤ 3.5	≤ 2.5	≤ 0.4	≤ 1.0	≤ 0.8
ISO transponder, e.g. MDS D100						
Read (with 4 bytes of user data / 1 block)	≤ 1.2	≤ 1.6	≤ 1.2	≤ 0.4	≤ 3.0	≤ 1.4
Write (with 4 bytes of user data / 1 block)	≤ 0.2	≤ 1.2	≤ 1.0	≤ 0.3	≤ 2.8	≤ 1.2
Read (with 112 bytes of complete user data)	≤ 0.4	≤ 1.4	≤ 0.8	≤ 0.2	≤ 2.2	≤ 1.0
Write (with 112 bytes of complete user data)	≤ 0.1	≤ 0.4	≤ 0.2	≤ 0.1	≤ 0.5	≤ 0.2

All values in the table in m/s.

© Siemens AG 2016

2

Overview

Antennas	Features	Page
ANT 1	The ANT 1 is a universal flat antenna, also designed for dynamic applications. Usable for readers: • RF350R	2/131
ANT 3	Due to its slimline, compact design, the ANT 3 antenna can still be precisely positioned even in cramped conditions. Usable for readers: • RF250R • RF350R • RF350M	2/132
ANT 3S	Due to its slimline, compact design, the ANT 3S antenna can still be precisely positioned even in cramped conditions. The ANT 3S is suitable only for use with transponders MDS D117, MDS D127, MDS D421 and MDS D521. Usable for readers: • RF250R • RF350R • RF350M	2/133
ANT 8	The ANT 8 antenna is a cylindrical antenna and is intended predominantly for the area of tool identification. The extremely small design of the antenna allows extremely accurate positioning. Usable for readers: • RF250R • RF350M	2/134
ANT 12	The ANT 12 antenna is a universal round antenna in M12 design for assembly lines with extremely small workpiece holders. Usable for readers: • RF250R • RF350R • RF350M	2/136
ANT 18	The ANT 18 antenna is a universal round antenna in M18 design for assembly lines with small workpiece holders. Usable for readers: • RF250R • RF350R • RF350M	2/137
ANT 30	The ANT 30 antenna is a universal round antenna in M30 design for assembly lines with small workpiece holders. Usable for readers: • RF250R • RF350R • RF350M	2/138

Antennen	Merkmale	Page
ANT D1	The ANT D1 is a universal antenna for the areas of production and logistics that can also be used in dynamic applications. Usable for readers: • RF290R	2/139
ANT D2	The ANT D2 antenna is specially designed for high speeds with a small antenna size, e.g. in overhead conveyors, assembly lines, production and order picking. The ANT D2 can be mounted directly onto metal surfaces. The antenna is designed for transponders that are directed sideways past the antenna. Usable for readers: • SLG D11 / SLG D11S	2/140
ANT D5	The ANT D5 is a universal antenna designed for warehouse, logistics and distribution applications. The high degree of protection (IP65) enables the antenna to be used under harsh industrial conditions. The antenna is designed for transponders that are directed sideways past the antenna. Usable for readers: • RF290R • SLG D11 / SLG D11S	2/141
ANT D6	The ANT D6 is a universal antenna designed for warehouse, logistics and distribution applications. The high degree of protection (IP65) enables the antenna to be used under harsh industrial conditions. Usable for readers: • RF290R	2/143
ANT D10	The ANT D10 is a universal antenna. It has been designed for warehouse, logistics and distribution applications, and is especially suitable for the clothing industry and laundries. It possesses an advantageous geometry for use with small transponders and a long transmission field. The high degree of protection (IP65) enables the antenna to be used under harsh industrial conditions. Usable for readers: • RF290R	2/145

© Siemens AG 2016

Overview

The ANT 1 is a universal flat antenna, also designed for dynamic applications.

The dimensions are L x W x H (mm): 75 x 75 x 20.

Technical specifications

Article number	**6GT2398-1CB00**
Product type designation	ANT 1 antenna
Suitability for operation	RF350R / MOBY E
Wireless frequencies	
Transmission frequency Rated value	13.56 MHz
Electrical data	
Type of electrical connection of the antenna	M8, 4-pin
Design of plug-in connection	male
Mechanical data	
Material	PA 12
Color	Anthracite
Tightening torque of the screw for securing the equipment maximum	2 Nm
Mounting distance	
• relating to metal surfaces recommended minimum	0.02 m
Permitted ambient conditions	
Ambient temperature	
• during operation	-25 ... +70 °C
• during storage	-40 ... +85 °C
• during transport	-40 ... +85 °C
Protection class IP	IP67
Resistance to mechanical stress	no bending or torsion permitted
Shock resistance	according to EN 60721-3-7 Class 7M2
Shock acceleration	500 m/s²
Vibrational acceleration	200 m/s²
Design, dimensions and weight	
Width	75 mm
Height	75 mm
Depth	20 mm
Net weight	225 g
Mounting type	2 screws M5
Cable length of antenna cable	3 m
Standards, specifications, approvals	
Certificate of suitability	CE, FCC, IC, cULus, Ex approval only together with reader 6GT2801-4AB10

Selection and ordering data

	Article No.
ANT 1 external antenna for RF350R readers. The antenna cable (3m long) is permanently connected to the antenna.	**6GT2398-1CB00**

Dimensional drawings

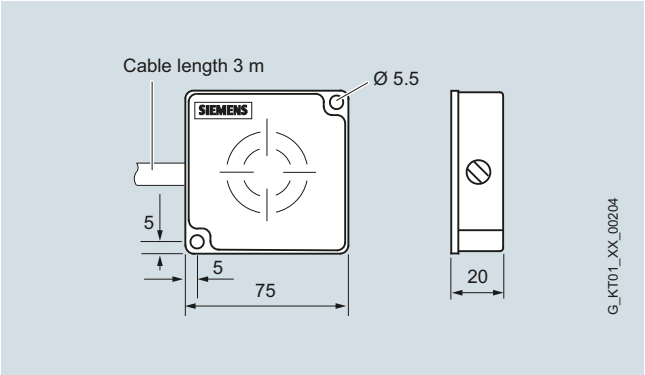

ANT 1 antenna

© Siemens AG 2016

ANT 3 for RF250R, RF350R and RF350M

Overview

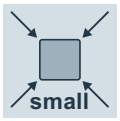

Due to its slimline, compact design, the ANT 3 antenna can still be precisely positioned even in cramped conditions.

The dimensions are L x W x H (mm): 50 x 28 x 10.

Technical specifications

Article number	**6GT2398-1CD30-0AX0**	**6GT2398-1CD40-0AX0**
Product type designation	ANT 3 antenna	ANT 3 antenna incl. antenna cable (3 m)
Suitability for operation	RF250R / RF350R / RF350M	RF250R / RF350R
Wireless frequencies		
Transmission frequency Rated value	13.56 MHz	
Electrical data		
Type of electrical connection of the antenna	M8, 4-pin	
Design of plug-in connection	female	male
Mechanical data		
Material	PA6 V0	
Color	black	
Tightening torque of the screw for securing the equipment maximum	1 Nm	
Mounting distance		
• relating to metal surfaces recommended minimum	0 m	
Permitted ambient conditions		
Ambient temperature		
• during operation	-25 ... +70 °C	
• during storage	-40 ... +85 °C	
• during transport	-40 ... +85 °C	
Protection class IP	IP67	
Shock resistance	according to EN 60721-3-7 Class 7M2	
Shock acceleration	500 m/s²	
Vibrational acceleration	200 m/s²	

Article number	**6GT2398-1CD30-0AX0**	**6GT2398-1CD40-0AX0**
Design, dimensions and weight		
Width	28 mm	
Height	50 mm	
Depth	10 mm	
Net weight	35 g	160 g
Mounting type	2 x M4 screws	2 x M4 screws
Cable length of antenna cable	-	3 m
Standards, specifications, approvals		
Certificate of suitability	CE, FCC, IC, cULus	
Accessories	Antenna cable	Included: 6GT23910-AH30 (antenna cable)

Selection and ordering data

	Article No.
ANT 3 external antenna	
• Without antenna connecting cable For RF250R, RF350R and RF350M readers.	**6GT2398-1CD30-0AX0**
• With antenna connecting cable included in the scope of delivery; can be connected at both ends (connector M8 straight / M8 angled), length 3 m. For RF250R and RF350R readers.	**6GT2398-1CD40-0AX0**
Accessories	
Antenna connecting cable for ANT 3 / ANT 3S / ANT 8 For direct connection of ANT 3, ANT 3S and ANT 8 to RF350M	
• Length 0.1 m (figure see page 2/119)	**6GT2898-0EA00**
• Length 3 m	**6GT2391-0AH30**

Dimensional drawings

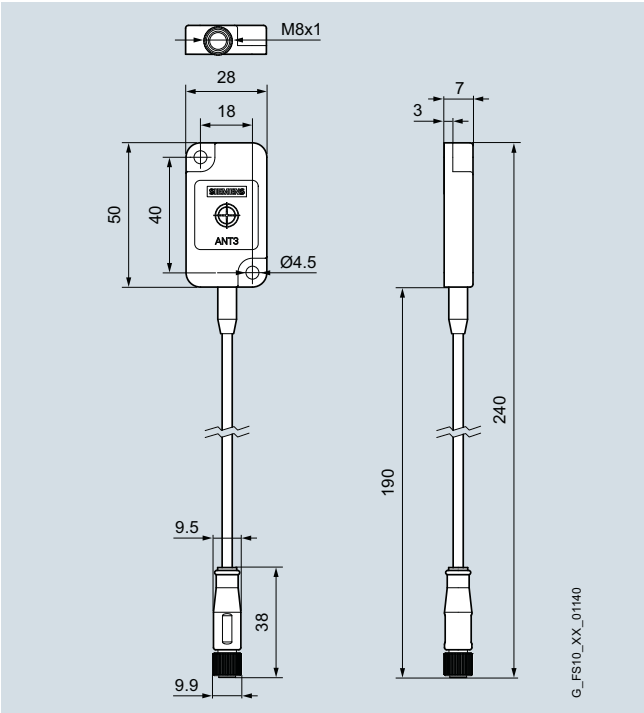

ANT 3 antenna

© Siemens AG 2016

Overview

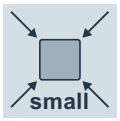

Due to its slimline, compact design, the ANT 3S antenna can still be precisely positioned even in cramped conditions.

The ANT 3S is suitable only for use with transponders MDS D117, MDS D127, MDS D421 and MDS D521.

The dimensions of the antenna are L x W x H (mm): 50 x 28 x 10.

Technical specifications

Article number	**6GT2398-1CD50-0AX0**	**6GT2398-1CD60-0AX0**
Product type designation	ANT 3S antenna	ANT 3S antenna including antenna cable (3 m)
Suitability for operation	RF250R / RF350R / RF350M	RF250R / RF350R
Wireless frequencies		
Transmission frequency Rated value	13.56 MHz	
Electrical data		
Type of electrical connection of the antenna	M8, 4-pin	
Design of plug-in connection	female	male
Mechanical data		
Material	PA6 V0	
Color	black	
Tightening torque of the screw for securing the equipment maximum	1 Nm	
Mounting distance		
• relating to metal surfaces recommended minimum	0 m	
Permitted ambient conditions		
Ambient temperature		
• during operation	-25 ... +70 °C	
• during storage	-40 ... +85 °C	
• during transport	-40 ... +85 °C	
Protection class IP	IP67	
Shock resistance	according to EN 60721-3-7 Class 7M2	
Shock acceleration	500 m/s²	
Vibrational acceleration	200 m/s²	

Article number	**6GT2398-1CD50-0AX0**	**6GT2398-1CD60-0AX0**
Design, dimensions and weight		
Width	28 mm	
Height	50 mm	
Depth	10 mm	
Net weight	35 g	160 g
Mounting type	2 x M4 screws	2 x M4 screws
Cable length of antenna cable	-	3 m
Standards, specifications, approvals		
Certificate of suitability	CE, FCC, IC, cULus	
Accessories	Antenna cable	Included: 6GT23910-AH30 (antenna cable)

Selection and ordering data

	Article No.
ANT 3S external antenna	
• Without antenna connecting cable For RF250R, RF350R and RF350M readers.	**6GT2398-1CD50-0AX0**
• With antenna connecting cable included in the scope of delivery; can be connected at both ends (connector M8 straight / M8 angled), length 3 m. For RF250R and RF350R readers.	**6GT2398-1CD60-0AX0**
Accessories	
Antenna connecting cable for ANT 3 / ANT 3S / ANT 8 For direct connection of ANT 3, ANT 3S and ANT 8 to RF350M (6GT2803-1BA10).	
• Length 0.1 m (figure see page 2/119)	**6GT2898-0EA00**
• Length 3 m	**6GT2391-0AH30**

Dimensional drawings

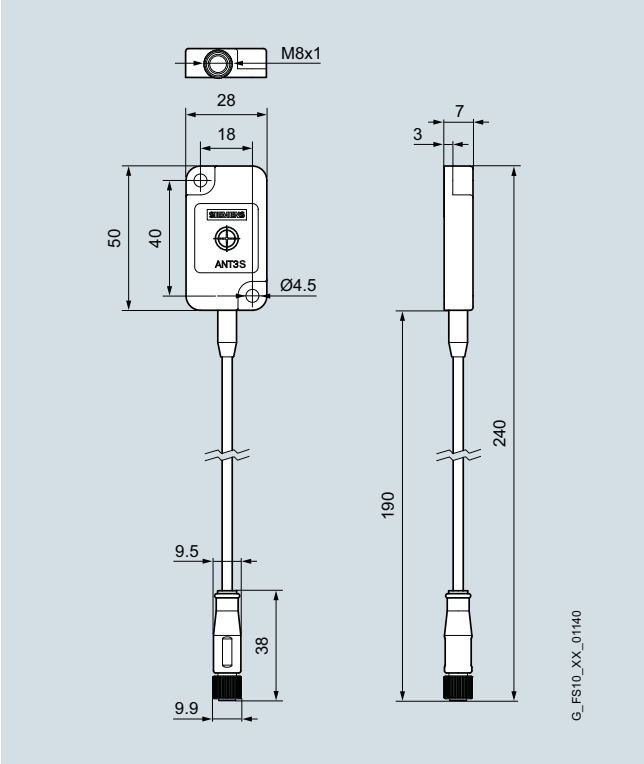

ANT 3S antenna

© Siemens AG 2016

ANT 8 for RF250R and RF350M

Overview

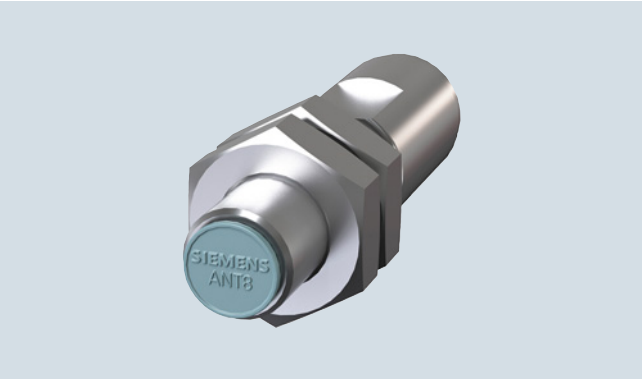

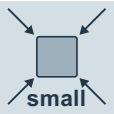

The ANT 8 antenna is a cylindrical antenna and is intended predominantly for the area of tool identification. The extremely small design of the antenna allows extremely accurate positioning. Dimensions Ø x L (mm): M8 x 38.

Technical specifications

Article number	**6GT2398-1CF00**	**6GT2398-1CF10**
Product type designation	ANT 8 antenna	ANT 8 antenna incl. antenna cable
Suitability for operation	RF250R / RF350M	RF250R
Wireless frequencies		
Transmission frequency Rated value	13.56 MHz	13.56 MHz
Electrical data		
Type of electrical connection of the antenna	M8, 4-pin	M8, 4-pin
Design of plug-in connection	female	male
Mechanical data		
Material	Stainless steel V2A	Stainless steel V2A
Color	Silver	Silver
Tightening torque of the screw for securing the equipment maximum	3 Nm	3 Nm
Mounting distance		
• relating to metal surfaces recommended minimum	0 m	0 m
Permitted ambient conditions		
Ambient temperature		
• during operation	-25 ... +70 °C	-25 ... +70 °C
• during storage	-40 ... +85 °C	-40 ... +85 °C
• during transport	-40 ... +85 °C	-40 ... +85 °C
Protection class IP	IP67, front	IP67, front
Shock resistance	according to EN 60721-3-7 Class 7M2	according to EN 60721-3-7 Class 7M2
Shock acceleration	500 m/s²	500 m/s²
Vibrational acceleration	200 m/s²	200 m/s²
Design, dimensions and weight		
Depth	40 mm	40 mm
Diameter	8 mm	8 mm
Net weight	10 g	140 g
Mounting type	2 stainless steel csrew nuts M8 x 1.0 (included)	2 stainless steel csrew nuts M8 x 1.0 (included)
Cable length of antenna cable		3 m
Standards, specifications, approvals		
Certificate of suitability	CE, FCC, IC, cULus	CE, FCC, IC, cULus
Accessories		
Accessories	Antenna cable	Included: 6GT23910-AH30 (antenna cable, length 3 m)

© Siemens AG 2016

Selection and ordering data

	Article No.
ANT 8 external antenna	
• Without antenna connecting cable For RF250R and RF350M readers.	**6GT2398-1CF00**
• With antenna connecting cable. The antenna connecting cable is included in the scope of delivery of the antenna and can be connected at both ends (M8 connector straight / M8 angled). Length 3 m. For RF250R readers.	**6GT2398-1CF10**
Accessories	
Antenna connecting cable for ANT 3 / ANT 3S / ANT 8 For direct connection of ANT 3, ANT 3S and ANT 8 to RF350M (6GT2803-1BA10).	
• Length 0.1 m	**6GT2898-0EA00**
• Length 3 m	**6GT2391-0AH30**

Dimensional drawings

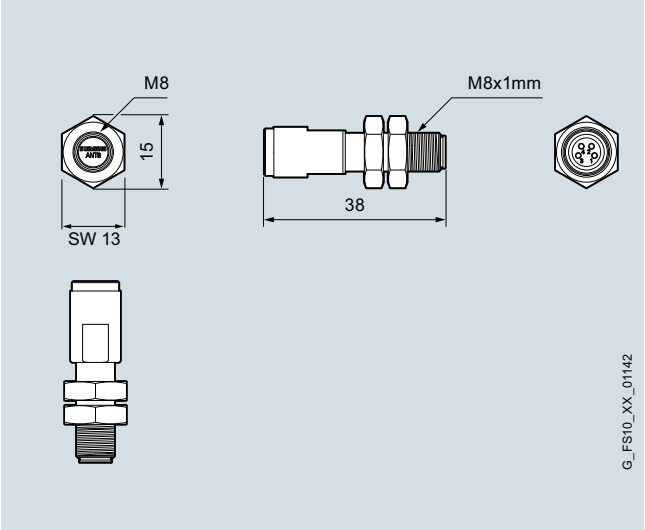

ANT 8 antenna

2

© Siemens AG 2016

ANT 12 for RF250R, RF350R and RF350M

Overview

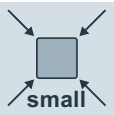

The ANT 12 antenna is a universal round antenna in M12 design for assembly lines with extremely small workpiece holders. Dimensions Ø x L (mm): M12 x 40.

Technical specifications

Article number	**6GT2398-1CC00**
Product type designation	ANT 12 antenna
Suitability for operation	RF250R / RF350R / RF350M / MOBY E
Wireless frequencies	
Transmission frequency Rated value	13.56 MHz
Electrical data	
Type of electrical connection of the antenna	M8, 4-pin
Design of plug-in connection	male
Mechanical data	
Material	Crastin
Color	Pastel turquoise
Tightening torque of the screw for securing the equipment maximum	3 Nm
Mounting distance	
• relating to metal surfaces recommended minimum	0 m

Article number	**6GT2398-1CC00**
Product type designation	ANT 12 antenna
Permitted ambient conditions	
Ambient temperature	
• during operation	-25 ... +70 °C
• during storage	-40 ... +85 °C
• during transport	-40 ... +85 °C
Protection class IP	IP67, front
Shock resistance	according to EN 60721-3-7 Class 7M2
Shock acceleration	500 m/s²
Vibrational acceleration	200 m/s²
Design, dimensions and weight	
Depth	40 mm
Diameter	12 mm
Net weight	145 g
Mounting type	2 plastic csrew nuts M12 x 1.0
Cable length of antenna cable	3 m
Standards, specifications, approvals	
Certificate of suitability	CE, FCC, IC, cULus, Ex approval only together with RF350R reader 6GT2801-4AB10

Selection and ordering data

	Article No.
ANT 12 external antenna for readers RF250R, RF350R and RF350M.	**6GT2398-1CC00**

Dimensional drawings

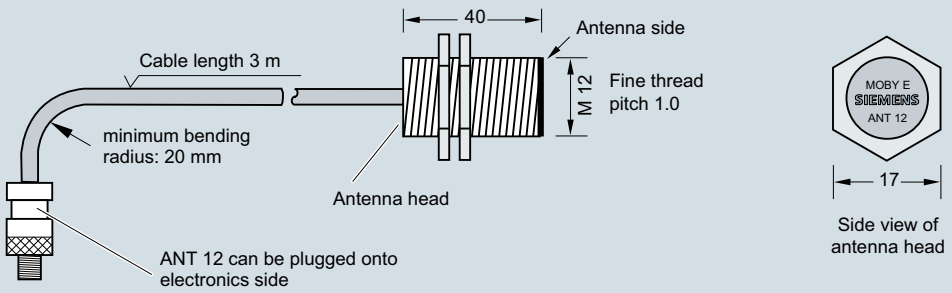

ANT 12 antenna

© Siemens AG 2016

Overview

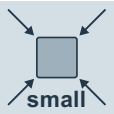

The ANT 18 antenna is a universal round antenna in M18 design for assembly lines with small workpiece holders.
Dimensions Ø x L (mm): M18 x 55.

Technical specifications

Article number	**6GT2398-1CA00**
Product type designation	ANT 18 antenna
Suitability for operation	RF250R / RF350R / RF350M / MOBY E
Wireless frequencies	
Transmission frequency Rated value	13.56 MHz
Electrical data	
Type of electrical connection of the antenna	M8, 4-pin
Design of plug-in connection	male
Mechanical data	
Material	Crastin
Color	Pastel turquoise
Tightening torque of the screw for securing the equipment maximum	3 Nm
Mounting distance	
• relating to metal surfaces recommended minimum	0 m

Article number	**6GT2398-1CA00**
Product type designation	ANT 18 antenna
Permitted ambient conditions	
Ambient temperature	
• during operation	-25 ... +70 °C
• during storage	-40 ... +85 °C
• during transport	-40 ... +85 °C
Protection class IP	IP67, front
Shock resistance	according to EN 60721-3-7 Class 7M2
Shock acceleration	500 m/s²
Vibrational acceleration	200 m/s²
Design, dimensions and weight	
Depth	55 mm
Diameter	18 mm
Net weight	130 g
Mounting type	2 plastic csrew nuts M18 x 1.0
Cable length of antenna cable	3 m
Standards, specifications, approvals	
Certificate of suitability	CE, FCC, IC, cULus, Ex approval only together with RF350R reader 6GT2801-4AB10

Selection and ordering data

	Article No.
ANT 18 external antenna for readers RF250R, RF350R and RF350M.	**6GT2398-1CA00**

Dimensional drawings

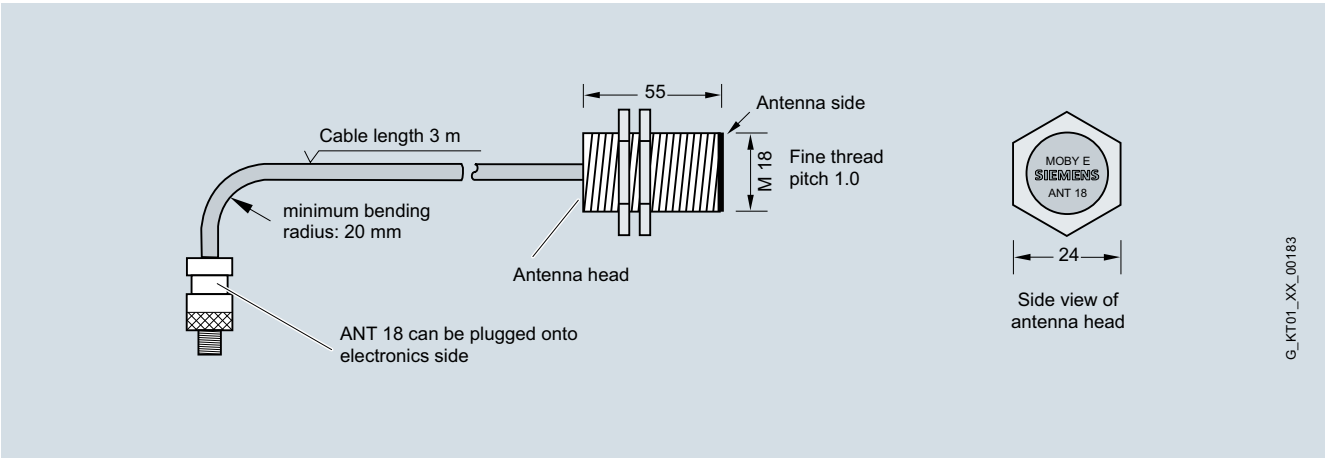

ANT 18 antenna

© Siemens AG 2016

ANT 30 for RF250R, RF350R and RF350M

Overview

The ANT 30 antenna is a universal round antenna in M30 design for assembly lines with small workpiece holders.
Dimensions Ø x L (mm): M30 x 58

Technical specifications

Article number	**6GT2398-1CD00**
Product type designation	ANT 30 antenna
Suitability for operation	RF250R / RF350R / RF350M / MOBY E
Wireless frequencies	
Transmission frequency Rated value	13.56 MHz
Electrical data	
Type of electrical connection of the antenna	M8, 4-pin
Design of plug-in connection	male
Mechanical data	
Material	Crastin
Color	Pastel turquoise
Tightening torque of the screw for securing the equipment maximum	3 Nm
Mounting distance	
• relating to metal surfaces recommended minimum	0 m

Article number	**6GT2398-1CD00**
Product type designation	ANT 30 antenna
Permitted ambient conditions	
Ambient temperature	
• during operation	-25 ... +70 °C
• during storage	-40 ... +85 °C
• during transport	-40 ... +85 °C
Protection class IP	IP67, front
Shock resistance	according to EN 60721-3-7 Class 7M2
Shock acceleration	500 m/s²
Vibrational acceleration	200 m/s²
Design, dimensions and weight	
Depth	58 mm
Diameter	30 mm
Net weight	180 g
Mounting type	2 plastic csrew nuts M30 x 1.5
Cable length of antenna cable	3 m
Standards, specifications, approvals	
Certificate of suitability	CE, FCC, IC, cULus, Ex approval only together with RF350R reader 6GT2801-4AB10

Selection and ordering data

	Article No.
ANT 30 external antenna for readers RF250R, RF350R and RF350M.	**6GT2398-1CD00**

Dimensional drawings

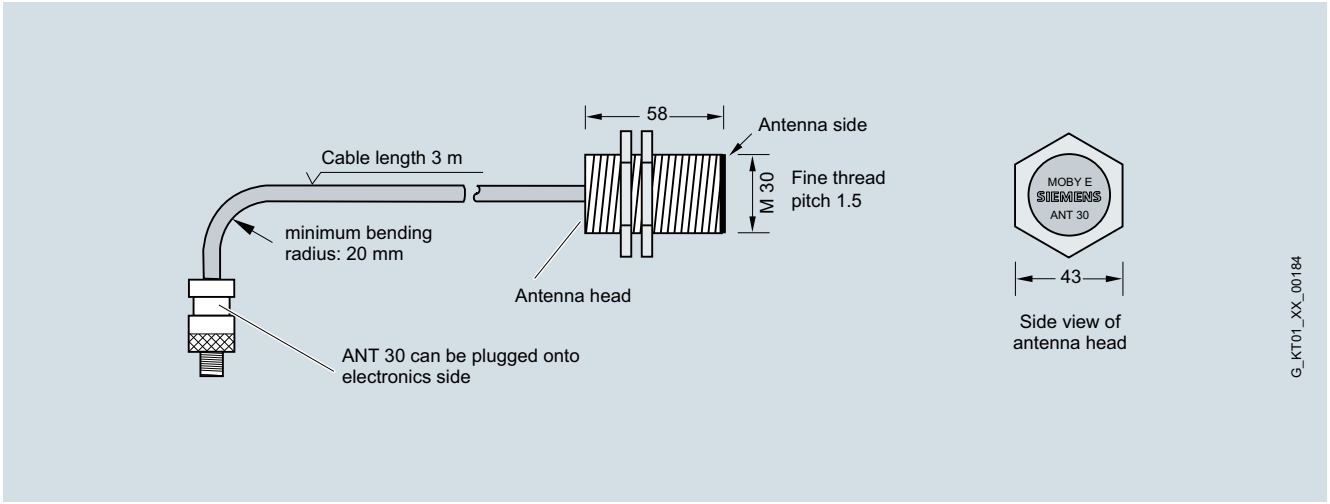

ANT 30 antenna

© Siemens AG 2016

Overview

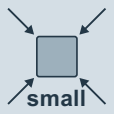

The ANT D1 is a universal antenna for the areas of production and logistics that can also be used in dynamic applications. The high degree of protection (IP67) means the antenna can also be used under harsh industrial conditions.

Technical specifications

Article number	**6GT2698-5AC00**
Product type designation	ANT D1 antenna
Suitability for operation	RF290R
Wireless frequencies	
Transmission frequency Rated value	13.56 MHz
Electrical data	
Type of electrical connection of the antenna	1-pol. TNC-Stecker
Design of plug-in connection	female
Mechanical data	
Material	PA 12
Color	Anthracite
Mounting distance	
• relating to metal surfaces recommended minimum	0.02 m
Permitted ambient conditions	
Ambient temperature	
• during operation	-20 ... +55 °C
• during storage	-25 ... +70 °C
• during transport	-25 ... +70 °C
Protection class IP	IP67
Shock resistance	according to EN 60721-3-7 Class 7M2
Shock acceleration	500 m/s²
Vibrational acceleration	200 m/s²
Design, dimensions and weight	
Width	75 mm
Height	75 mm
Depth	20 mm
Net weight	270 g
Mounting type	2 screws M5
Cable length of antenna cable	3.3 m
Accessories	Antenna cable

Selection and ordering data

	Article No.
ANT D1 antenna For RF290R readers, including antenna cable, PVC, length 3.3 m	**6GT2698-5AC00**
Accessories	
Cable extension Length 7.2 m	**6GT2691-0DH72**

Dimensional drawings

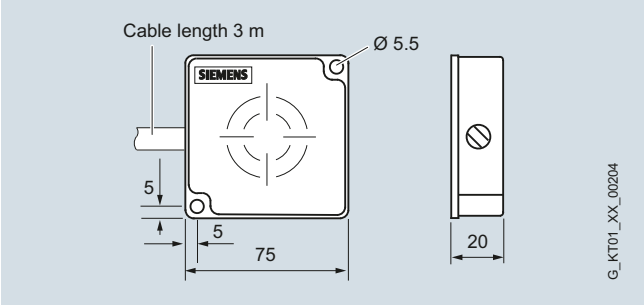

ANT D1 antenna

© Siemens AG 2016

ANT D2 for SLG D11 / SLG D11S

Overview

The ANT D2 antenna is designed for transponders that are directed sideways past the antenna. This antenna is specially designed for high speeds with a small antenna size, e.g. in overhead conveyors, assembly lines, production and order picking. It can be mounted directly onto metal surfaces.

Technical specifications

Article number	**6GT2698-5BB00**
Product type designation	ANT D2 antenna
Suitability for operation	MOBY D with SLG D11
Wireless frequencies	
Transmission frequency Rated value	13.56 MHz
Electrical data	
Type of electrical connection of the antenna	1-pol. TNC-Stecker
Design of plug-in connection	female
Mechanical data	
Material	PA 12
Color	Anthracite
Tightening torque of the screw for securing the equipment maximum	2 Nm
Mounting distance	
• relating to metal surfaces recommended minimum	0 m
Permitted ambient conditions	
Ambient temperature	
• during operation	-25 ... +70 °C
• during storage	-40 ... +85 °C
• during transport	-40 ... +85 °C
Protection class IP	IP65
Shock resistance	according to EN 60721-3-7 Class 7M2
Shock acceleration	500 m/s²
Vibrational acceleration	100 m/s²
Design, dimensions and weight	
Width	75 mm
Height	75 mm
Depth	40 mm
Net weight	260 g
Mounting type	2 screws M5, mounting dependent on direction
Cable length of antenna cable	3.3 m
Standards, specifications, approvals	
Certificate of suitability	CE, FCC, IC, cULus

Selection and ordering data

	Article No.
ANT D2 antenna For SLG D11 / SLG D11S basic units, lateral antenna field, incl. PVC antenna cable (length 3.3 m).	**6GT2698-5BB00**

Dimensional drawings

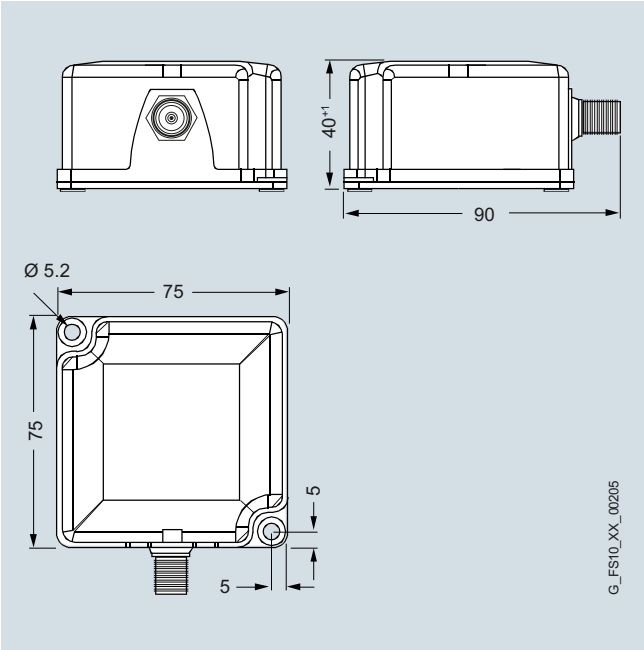

ANT D2 antenna

© Siemens AG 2016

Overview

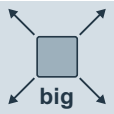

The ANT D5 is a universal antenna designed for warehouse, logistics and distribution applications. The high degree of protection (IP65) enables the antenna to be used under harsh industrial conditions. The antenna is designed for transponders that are directed sideways past the antenna.

Technical specifications

Article number	**6GT2698-5AA10**
Product type designation	ANT D5 antenna
Suitability for operation	RF290R, MOBY D with SLG D10, D11
Wireless frequencies	
Transmission frequency Rated value	13.56 MHz
Electrical data	
Type of electrical connection of the antenna	1-pol. TNC-Stecker
Design of plug-in connection	female
Mechanical data	
Material	Aluminum/plastic
Color	black/gray
Mounting distance	
• relating to metal surfaces recommended minimum	0 m
Permitted ambient conditions	
Ambient temperature	
• during operation	-20 ... +55 °C
• during storage	-25 ... +70 °C
• during transport	-25 ... +70 °C
Protection class IP	IP65
Shock resistance	according to EN 60721-3-7 Class 7M2
Shock acceleration	300 m/s²
Vibrational acceleration	10 m/s²
Design, dimensions and weight	
Width	380 mm
Height	380 mm
Depth	110 mm
Net weight	2 kg
Mounting type	4 screws M6
Cable length of antenna cable	3.3 m
Standards, specifications, approvals	
Certificate of suitability	CE, FCC
Accessories	Antenna cables 3.3 m, 10 m, extension 7.2 m

Selection and ordering data

	Article No.
ANT D5 antenna for RF290R readers and SLG D11 / SLG D11S basic units, including antenna cable, PVC, length 3.3 m	**6GT2698-5AA10**
Accessories	
Antenna switch For connecting several antennas (ANT D5 or ANT D6) to one RF290R reader, IP65, -25 °C to +65 °C	**6GT2690-0AC00**
SIMATIC RF260X antenna multiplexer Antenna multiplexer for RF290R reader when connected via RS232. 6 x antenna outputs (for ANT D5, ANT D6 and ANT D10); IP65; 240 mm x 150 mm x 70 mm; including antenna connecting cable, cable length 0.4 m.	**6GT2894-0EA00**
Accessories for antenna switch and antenna multiplexer	
Antenna connecting cable Between antenna and reader or antenna switch/multiplexer, PVC material.	
• Length 3.3 m	**6GT2691-0CH33**
• Length 10 m	**6GT2691-0CN10**
Extension cable For 6GT2691-0CH33, PVC material. Length 7.2 m.	**6GT2691-0DH72**

© Siemens AG 2016

2

Dimensional drawings

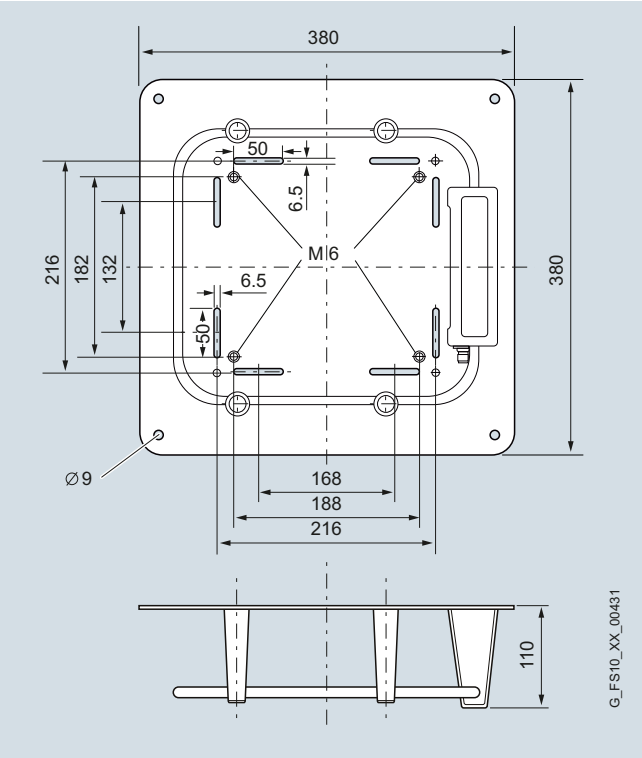

ANT D5 antenna

© Siemens AG 2016

Overview

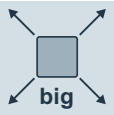

The ANT D6 is a universal antenna designed for warehouse, logistics and distribution applications. The high degree of protection (IP65) enables the antenna to be used under harsh industrial conditions.

Technical specifications

Article number	**6GT2698-5AB00**
Product type designation	ANT D6 antenna
Suitability for operation	RF290R, MOBY D with SLG D10
Wireless frequencies	
Transmission frequency Rated value	13.56 MHz
Electrical data	
Type of electrical connection of the antenna	1-pol. TNC-Stecker
Design of plug-in connection	female
Mechanical data	
Material	Aluminum/plastic
Color	gray / black
Mounting distance	
• relating to metal surfaces recommended minimum	0 m
Permitted ambient conditions	
Ambient temperature	
• during operation	-20 ... +55 °C
• during storage	-25 ... +70 °C
• during transport	-25 ... +70 °C
Protection class IP	IP65
Shock resistance	according to EN 60721-3-7 Class 7M2
Shock acceleration	300 m/s²
Vibrational acceleration	10 m/s²
Design, dimensions and weight	
Width	480 mm
Height	580 mm
Depth	110 mm
Net weight	3.3 kg
Mounting type	4 screws M6
Cable length of antenna cable	3.3 m
Standards, specifications, approvals	
Certificate of suitability	CE, FCC, cULus
Accessories	
Accessories	Antenna cables 3.3 m, 10 m, extension 7.2 m

Selection and ordering data

	Article No.
ANT D6 antenna for RF290R readers, including antenna cable, PVC, length 3.3 m	**6GT2698-5AB00**
Accessories	
Shrouding cover Serves as contact protection for ANT D6	**6GT2690-0AD00**
Antenna switch For connecting several antennas (ANT D5 or ANT D6) to one RF290R reader, IP65, -25 °C to +65 °C	**6GT2690-0AC00**
SIMATIC RF260X antenna multiplexer Antenna multiplexer for RF290R reader when connected via RS232. 6 x antenna outputs (for ANT D5, ANT D6 and ANT D10); IP65; 240 mm x 150 mm x 70 mm; including antenna connecting cable, cable length 0.4 m.	**6GT2894-0EA00**
Accessories for antenna switch and antenna multiplexer	
Antenna connecting cable Between antenna and reader or antenna switch/multiplexer, PVC material.	
• Length 3.3 m	**6GT2691-0CH33**
• Length 10 m	**6GT2691-0CN10**
Extension cable For 6GT2691-0CH33, PVC material. Length 7.2 m.	**6GT2691-0DH72**

© Siemens AG 2016

2

Dimensional drawings

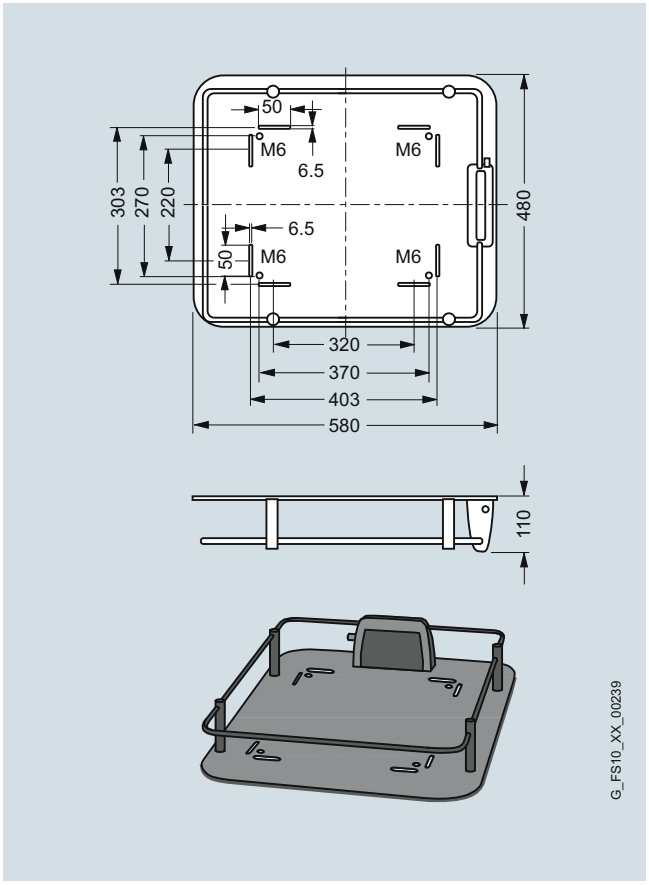

ANT D6 antenna

© Siemens AG 2016

Overview

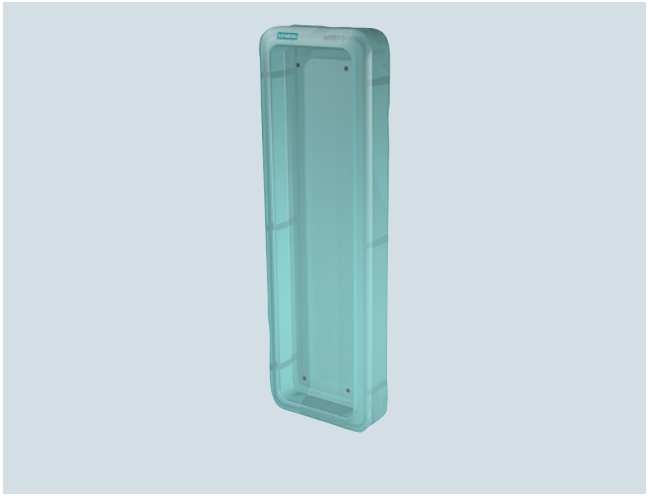

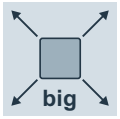

The ANT D10 is a universal antenna designed for warehouse, logistics and distribution applications. The high degree of protection (IP65) enables the antenna to be used under harsh industrial conditions.

Technical specifications

Article number	**6GT2698-5AF00**
Product type designation	ANT D10 antenna
Suitability for operation	RF290R, MOBY D with SLG D10
Wireless frequencies	
Transmission frequency Rated value	13.56 MHz
Electrical data	
Type of electrical connection of the antenna	1-pol. TNC-Stecker
Design of plug-in connection	female
Mechanical data	
Material	Aluminum/plastic
Color	Transparent (cover), gray/black (antenna)
Mounting distance	
• relating to metal surfaces recommended minimum	0 m
Permitted ambient conditions	
Ambient temperature	
• during operation	-20 ... +55 °C
• during storage	-25 ... +70 °C
• during transport	-25 ... +70 °C
Protection class IP	IP65
Shock resistance	according to EN 60721-3-7 Class 7M2
Shock acceleration	300 m/s²
Vibrational acceleration	10 m/s²
Design, dimensions and weight	
Width	365 mm
Height	1 150 mm
Depth	115 mm
Net weight	10 kg
Mounting type	4 screws M6
Cable length of antenna cable	3.3 m
Standards, specifications, approvals	
Certificate of suitability	CE, FCC, cULus
Accessories	
Accessories	Antenna cables 3.3 m, 10 m, extension 7.2 m

© Siemens AG 2016

ANT D10 for RF290R

Selection and ordering data

	Article No.
ANT D10 antenna For the RF290R reader, incl. antenna cable, PVC, length 3.3 m.	**6GT2698-5AF00**
Accessories	
Antenna switch For connecting multiple antennas (ANT D5, ANT D6 or ANT D10) to one reader 	**6GT2690-0AC00**
SIMATIC RF260X antenna multiplexer Antenna multiplexer for RF290R reader when connected via RS232. 6 x antenna outputs (for ANT D5, ANT D6 and ANT D10); IP65; 240 mm x 150 mm x 70 mm; including antenna connecting cable, cable length 0.4 m 	**6GT2894-0EA00**
Accessories for antenna switch and antenna multiplexer	
Antenna connecting cable Between antenna and reader or antenna switch/multiplexer, PVC material.	
• Length 3.3 m	**6GT2691-0CH33**
• Length 10 m	**6GT2691-0CN10**
Extension cable For 6GT2691-0CH33, PVC material. Length 7.2 m.	**6GT2691-0DH72**

Dimensional drawings

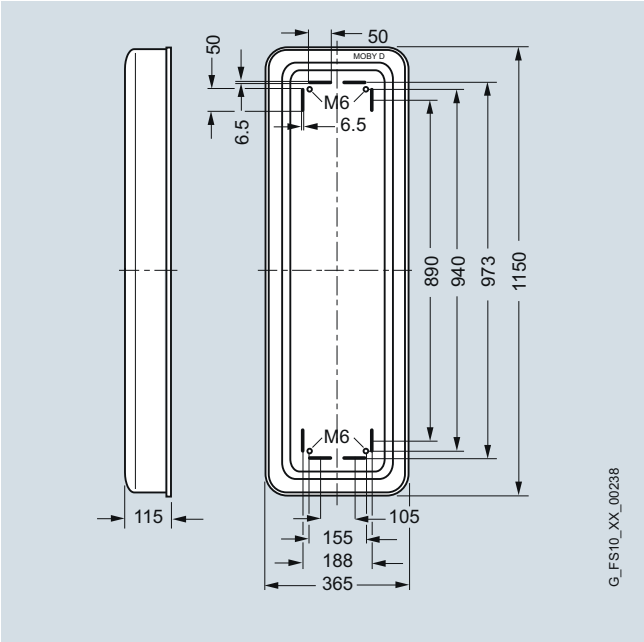

ANT D10 antenna