SINUMERIK 840
Software Versions 1 and 2
Installation Instructions

Installation Guide

Service Documentation

Valid for:

Control	*Software Versions*
SINUMERIK 840T	1 and 2
SINUMERIK 840M	1 and 2

March 1992 Edition

SINUMERIK® documentation

Printing history

Brief details of this edition and previous editions are listed below.

The status of each edition is shown by the code in the "Remarks" column.

Status code in "Remarks" column:

A . . . New documentation
B . . . Unrevised reprint with new Order No.
C . . . Revised edition with new status. If factual changes have been made on the page since the last edition, this is indicated by a new edition coding in the header on that page.

Edition	Order No.	Remarks
04.90	6ZB5 410-0EN02-0AA0	A
08.91	6ZB5 410-0EN02-0AA1	C
03.92	6ZB5 410-0EN02-0AA2	C

Other functions not described in this documentation might be executable in the control. This does not, however, represent an obligation to supply such functions with a new control or when servicing.

This publication was produced on the Siemens 5800 Office System.
Subject to change without prior notice.

The reproduction, transmission or use of this document or its contents is not permitted without express written authority. Offenders will be liable for damages. All rights, including rights created by patent grant or registration of a utility model or design, are reserved.

© Siemens AG 1990 All Rights Reserved

Preliminary Remarks

Notes for the reader

This manual is intended for manufacturers of machine tools who use SINUMERIK 840.

The "Installation Instructions" discuss the installation and start-up procedures, from installation of the system through the testing of the most important functions.

The SINUMERIK 840 Installation Guide is divided into two separate manuals:

- 840 Installation Instructions
- 840 Installation Lists

The supplementary manual, which is entitled "SINUMERIK 840, Installation Instruction Lists", provides additional aids in the form of lists and detailed information on NC and PLC machine data and setting data, as well as lists of control and programmer alarms.

The manufacturer documentation for the SINUMERIK 840 control is divided into the following parts:

- Instruction Manual
- Interface
  Part 1: Signals
  Part 2: Connection Conditions
- Function Macros
- Function Blocks
- Package 0: Basic Functions
- Package 1: Tool Management
- Package 4/5: Computer Link
- Configuring PLC 135WB

Additional SINUMERIK publications which are valid for all SINUMERIK controls may also be consulted (e.g. Universal Interface, Measuring Cycles, CL 800 Cycle Language).

Please contact your local SIEMENS office for further details.

Technical notes

The Installation Instructions and Lists apply to a specific software version only. A new Installation Guide is required for each new software version. Old Installation Guides can be used only in part for new software versions.

This documentation is valid for software versions 1 and 2.

Prerequisites and Visual Inspection	1
Installation Checklist	2
Voltage and Functional Tests	3
Standard Installation (in brief)	4
Axis Installation	5
Spindle Installation	6
PLC Installation	7
NC Machine Data (NC MD)	8
PLC Machine Data (PLC MD)	9
Interface to the Machine	10
Data Protection, General Reset	11
Functional Descriptions	12
Axis Service Data	13
Monitoring	14
Terms and Abbreviations	15

Contents

		Page
1	**Prerequisites and Visual Inspection**	1–1
1.1	Prerequisites	1–1
1.2	Visual inspection	1–1
1.2.1	Information on module handling	1–2
1.2.2	Grounding system	1–3
1.2.3	Position encoders	1–3
1.2.4	Cable laying	1–3
1.2.5	Cables	1–4
1.2.6	Shielding	1–4
1.2.7	Interference suppression	1–4
1.2.8	Operator panel	1–4
1.2.9	Overall state	1–4
1.2.10	Batteries	1–5
1.2.10.1	Lithium batteries	1–5
1.2.10.2	Alkaline batteries	1–5
1.2.11	Jumpering	1–5
1.2.12	Position control, input and measuring system resolution	1–6
1.2.13	Input units	1–6
1.3	Export version	1–7
2	**Installation Checklist**	2–1
3	**Voltage and Functional Tests**	3–1
3.1	Voltage test	3–1
3.1.1	Power supply	3–1
3.1.2	+5 V DC	3–1
3.1.3	External +5 V DC	3–1
3.1.4	Temperature limit	3–3
3.1.5	Fan monitoring	3–3
3.2	Functional test	3–4
3.2.1	CPU monitoring	3–4
3.2.2	EPROM check	3–5
3.2.3	Brightness control	3–6
4	**Standard Installation (in brief)**	4–1
4.1	Standard installation as flowchart	4–2
4.2	Enter NC machine data	4–3
4.3	Enter PLC machine data	4–4
4.4	Axis installation (simplified)	4–5
4.5	Spindle installation (Example: one spindle)	4–6

5	**Axis Installation**	5–1
5.1	Drive optimization	5–1
5.1.1	Checking and setting the control direction of the feed axes	5–1
5.1.2	Defining the maximum setpoint and tacho compensation	5–3
5.1.3	Multgain NC MD 260*	5–4
5.1.4	Servo gain factor KV NC MD 252*	5–6
5.1.5	Acceleration NC MD 276*	5–8
5.1.6	Position monitoring	5–10
5.1.7	Contour monitoring	5–11
5.2	Drift compensation	5–14
5.3	Axis traversing	5–16
5.3.1	Traversing in jog mode	5–16
5.3.2	Program–controlled traversing	5–17
5.4	Reference point approach	5–18
5.4.1	Corresponding data	5–18
5.4.2	Reference point approach without automatic direction–finding	5–18
5.4.3	Reference point approach with automatic direction–finding	5–21
5.4.4	Program–controlled reference point approach	5–23
5.5	Axis–specific resolutions	5–24
5.5.1	Corresponding data	5–24
5.5.2	General remarks on the axis–specific resolutions	5–24
5.5.3	Input, display and position control resolution	5–24
5.5.4	Resolution block diagram	5–26
5.5.5	Resolution codes	5–27
5.5.6	Permissible combinations	5–28
5.5.7	The influence of resolution on speed	5–29
5.5.8	Limiting values for thread cutting	5–32
5.5.9	Range Limits	5–33
5.5.10	Influence on the display	5–36
5.5.11	Influence on the modes/function	5–38
5.6	Determining sampling interval and interpolation time	5–40
5.6.1	Corresponding data	5–40
5.6.2	Functional description	5–40
5.6.3	Setting	5–41
5.6.4	Example for setting the sampling interval	5–41
6	**Spindle Installation**	6–1
6.1	Corresponding data	6–1
6.2	S–analog (M3, M4, M5)	6–1
6.3	M19 (Oriented spindle stop)	6–2
6.4	PLC intervention in spindle control	6–13
7	**PLC Installation**	7–1
7.1	135 WB	7–1
7.2	Installation	7–1
7.2.1	Self–diagnostics program	7–2
7.2.2	System initialization program	7–3
7.2.3	Timeout analysis	7–4
7.2.4	Error list for PLC 135 WB	7–4
7.3	Operation using the PG	7–5
7.3.1	Connecting the programmer	7–5

7.3.2	PLC-PG AG-PG 685/PG 750/PG 730 link	7–6
7.4	PLC status	7–7
7.4.1	Operator entries in PLC STATUS mode	7–7
7.4.2	Select PLC status display	7–8
8	**NC Machine Data (NC MD)**	8–1
8.1	General remarks	8–1
8.1.1	Entering NC machine data	8–1
8.1.2	NC configuration	8–2
8.1.3	Additional configuring information	8–3
8.1.4	Breakdown of the NC MDs	8–5
8.1.5	Areas for channels, axes and spindles	8–6
8.1.6	Sample NC MD	8–9
8.2	General machine data (general data)	8–10
8.3	Channel–specific MD (channel data)	8–35
8.4	Axis–specific MD 1 (axial data 1)	8–39
8.5	Axis–specific MD 2 (axial data 2)	8–72
8.6	Spindle–specific MD (spindle data)	8–78
8.7	MD for monitor, positive colour representation as from Software Version 2	8–98
8.8	Machine data bits	8–107
8.8.1	General MD bits (general bits)	8–107
8.8.2	Spindle–specific MD bits (spindle bits)	8–135
8.8.3	Channel–specific MD bits 1 (channel bits)	8–139
8.8.4	Axis–specific MD bits 1 (axial bits 1)	8–150
8.8.5	Axis–specific MD bits 2 (axial bits 2)	8–156
8.8.6	Leadscrew error compensation bits (compensation flags)	8–159
8.9	Setting data/data interfaces	8–160
8.9.1	NC setting data (NC SD)	8–160
8.9.2	Spindle–specific setting data	8–161
8.10	Cycles machine data	8–164
9	**PLC Machine Data (PLC MD)**	9–1
9.1	General remarks	9–1
9.1.1	Entering PLC MD	9–1
9.1.2	Breakdown of the PLC MD	9–2
9.2	PLC MD for the operating system (system data)	9–3
9.3	PLC MD for function blocks (FB data)	9–13
9.4	PLC MD for the user	9–14
9.5	PLC MD for the operating system (system bits)	9–15
9.6	PLC MD bits for function blocks (FB bits)	9–33
9.7	PLC MD bits for the user (user bits)	9–34
10	**Interface to the Machine**	10–1
10.1	DAC measuring–circuit module (6FX1121–4B..)	10–1
10.1.1	Connector pin assignments for actual–value input	10–1
10.1.2	Differential input	10–2
10.1.3	Equivalent circuit diagram with differential input	10–3
10.1.4	Equivalent circuit diagram for actual–value input with integrated EXE	10–4

10.1.5	Complement for integrated EXE	10–5
10.1.6	Input signals with integrated EXE	10–6
10.1.7	Connector pin assignments for setpoint output	10–7
10.1.8	Equivalent circuit diagram of the setpoint speed output (for an axis)	10–8
10.2	HMS measuring circuit module 6FX1 145–6B□00	10–9
10.3	HMS measuring–circuit module	10–14
10.3.1	Connector pin assignments for actual–value input	10–14
10.4	Serial interface (V.24 (RS232C) + 20 mA)	10–15
10.5	Interface submodule for electronic handwheels (6FX1144–0BA . .)	10–16
10.5.1	Connector pin assignments	10–16
10.5.2	Equivalent circuit diagram	10–16
10.6	Measuring–pulse inputs (sensors)	10–17
10.7	NC Ready	10–17
11	**Data Protection, General Reset**	11–1
11.1	Data areas	11–1
11.2	Data backup with the programmer	11–2
11.2.1	Introduction	11–2
11.2.2	Using diskettes	11–2
11.2.2.1	Formatting empty disks	11–3
11.2.2.2	Copying diskettes	11–4
11.2.2.3	Changing diskettes	11–5
11.2.2.4	Listing the directory	11–5
11.2.3	File handling	11–6
11.2.3.1	Listing files	11–7
11.2.3.2	Copying files	11–7
11.2.4	Parameterizing interfaces for data transfer with the PG	11–8
11.2.4.1	Interface parameters on the SINUMERIK 805, 810, 820, 840, 880	11–8
11.2.4.2	Interface parameters on the programmer	11–8
11.2.4.3	Other baud rates (for PG 685 only)	11–8
11.2.4.4	Data start identifiers	11–9
11.2.5	How to transfer from the SINUMERIK 840 to the programmer	11–9
11.2.6	How to transfer from the programmer to the SINUMERIK 840	11–11
11.2.7	Procedure for PG linkage to the SINUMERIK 840	11–12
11.3	General reset mode	11–16
11.3.1	General remarks	11–16
11.3.2	Selecting the general reset mode	11–16
11.3.3	Softkeys in general reset mode	11–17
11.3.4	Softkey descriptions	11–18
11.3.5	Deselecting general reset mode	11–19
12	**Functional Descriptions**	12–1
12.1	Leadscrew error compensation	12–1
12.1.1	Corresponding data	12–1
12.1.2	Functional description	12–1
12.2	Rotary axis function	12–10
12.2.1	Corresponding data	12–10
12.2.2	Functional description	12–10
12.3	Warm restart	12–12

12.3.1	Corresponding data	12–12
12.3.2	Functional description	12–12
12.4	Coordinate transformation	12–14
12.4.1	Corresponding data	12–14
12.4.2	Functional description of coordinate transformation	12–15
12.4.3	The transformation data set	12–16
12.4.4	Transformation parameters	12–18
12.4.5	Machine data for fictitious axes	12–20
12.4.6	NC PLC interface signals	12–21
12.4.7	Explanation of the programming and operation of coordinate transformation	12–22
12.4.8	Examples of coordinate transformation	12–24
12.4.8.1	Example of TRANSMIT coordinate transformation	12–24
12.4.8.2	Example of 2D coordinate transformation	12–25
12.4.8.3	Example of 3D coordinate transformation	12–26
12.5	Spindle functions	12–27
12.5.1	Overview	12–27
12.5.2	Description of the spindle modes	12–29
12.5.2.1	Open–loop control mode	12–29
12.5.2.2	Selecting the open–loop control mode	12–29
12.5.2.3	Gear ratio changing	12–30
12.5.2.4	Data required	12–30
12.5.3	Oscillation mode	2–31
12.5.4	Positioning mode	2–31
12.5.4.1	General	2–31
12.5.4.2	Selecting the positioning mode	12–32
12.5.4.3	Data required	12–32
12.5.4.4	The positioning sequence	12–33
12.5.4.5	Gain factor change	12–39
12.5.4.6	Aborting the positioning mode	12–41
12.5.5	C axis mode	12–41
12.5.5.1	General	12–41
12.5.5.2	Selection and deselection of the C axis mode	12–42
12.5.5.3	Synchronizing and referencing	12–42
12.5.5.4	Initiating the C axis mode	12–46
12.5.6	Encoder–specific resolution	12–48
12.5.7	Possible configurations for the C axis mode	12–49
12.6	SIPOS absolute encoder	12–51
12.6.1	Functions	12–51
12.6.2	Hardware requirements	12–51
12.6.3	Synchronizing the absolute encoder with the machine absolute system	12–52
12.6.3.1	Synchronization in "Reference point approach" mode	12–52
12.6.3.2	Setting up without a reference point	12–54
12.6.4	What happens on warm restart (POWER ON)	12–55
12.6.5	Special case "Parking axis"	12–55
12.6.6	Absolute encoder error	12–55
12.6.7	Comments	12–56
12.6.8	Absolute encoder errors	12–57
12.7	Fast block change with FIFO function	12–58
12.8	Extended thread package	12–59
12.8.1	Following error compensation with thread cutting	12–59

13	**Axis Service Data**	13–1
13.1	Service numbers	13–2
13.2	Spindle service data	13–6
14	**Monitoring**	14–1
14.1	Alarm messages	14–1
14.1.1	Alarm groups	14–1
14.1.2	Alarm numbers/cancellation of alarms	14–2
14.1.3	Display of the alarms	14–3
14.1.4	Priority of alarms	14–5
4.1.5	Alarm description	14–5
14.2	Dialog texts	14–92
14.2.1	Notes for the operator	14–92
14.2.2	Listing of dialog texts	14–92
15	**Terms and Abbreviations**	15–1

1 Prerequisites and Visual Inspection

1.1 Prerequisites

The following prerequisites must be fulfilled prior to initial start-up:

- Electrical and mechanical installation of the machine must have been completed and the axes prepared for operation.

  The following points must be confirmed by the customer!

- Customer PLC program operational and pretested.
- Measuring system installed and wired as far as SINUMERIK (see Section 1.2.3).
- Cables connected to the machine. Cable shields run to the control neutral point as per Interface Description. Flexible earth wires installed (see Section 1.2.2). Earthing concept observed (inspect carefully!).
- Customer personnel support for work on the interface unit, work on the machine, machine operation and customer produced PLC program.

  Recommendation:

  Prelimit travel ranges (greater clearance distances) by displacing the end stop (EMERGENCY STOP cam).
- The specified machine data is available.
- Data carriers are available for checking machine specific functions.

1.2 Visual inspection

General remarks:

Refer to the "EMC Guidelines", Order No. 6FC 3987-7DB

These guidelines provide the following information:

- Why are EMC guidelines necessary?
- What external interference sources affect the control?
- How can interference be prevented?
- Practical examples for an interference free installation.
- How should electronically endangered components (EEC) be handled?
- How can an EMC problem be rectified?
- What standards are relevant to EMC?

© Siemens AG 1990 All Rights Reserved 6ZB5 410-0EN02

1.2.1 Information on module handling

- Synthetic or rubber soling, and in particular flooring and carpeting, may produce static charges of several kilovolts in human beings. Integrated circuits are sensitive to this kind of high voltage discharge.
- Electrostatic charging can cause damage even when the control is switched off. Short-circuiting across the VCC RAM printed conductors, for instance, can corrupt the data stored in the battery backed CMOS RAM chips or even cause the printed conductors to burn out.
- The safety measures listed below must therefore be carefully observed in order to avoid damage caused by improper handling.
- Never touch the printed conductors or components without first discharging on a grounded system part.
- Remove or insert modules and power supply cables only when the control is switched off.

Note:

If modules have to be replaced or should a malfunction occur, always make sure that all ICs are inserted properly and in the right place.

Special instructions regarding the handling of modules equipped with MOS chips:

MOS is a technology used to produce LSI digital circuits. "MOS" stands for Metal Oxide Semiconductor.

The principle advantages of MOS technology are:
- Simple transistor design
- High component density
- Extremely low power consumption

There are special safety regulations for modules equipped with MOS chips. These modules are thus specially marked:

Identification on packaging:

Caution! Observe safety regulations! **MOS**

Identification on the PCB:

M
O
S

The printed circuit board is fitted with MOS chips. To prevent these chips from being irreparably damaged, equipotential bonding must be ensured prior to installing the PCB. Remove the PCB together with the conductive foam plastic from the packaging and touch a part of the system that has been grounded.

Do not touch the printed conductors or components!

© Siemens AG 1990 All Rights Reserved 6ZB5 410-0EN02

Additional instructions:

- Do not open the special packaging unnecessarily.
- Store only in the black (conductive) foam plastic.
- Do not bring into contact with synthetic materials (possibility of static charging).
- Disconnect the power supply prior to insertion and removal.

1.2.2 Grounding system

Proper grounding to divert external interference is vital to trouble-free operation. It must be ensured that the ground wires are not looped and have the required cross section.

Grounding concept

- The grounding system fulfils the requirements of the DIN VDE 0160 standard.
- The grounding concept for NC, PC, drives and machines is uniform.
- The ground connections are run in star configuration to a central mass point.
- The equipotential bonding strip is used for equipotential bonding of the external components.
- PE terminal.

Refer to the instruction manual for an example of the grounding concept for SINUMERIK 840.

1.2.3 Position encoders

Particular attention is to be paid to the prescribed installation of the graduated scales (air gap, etc.) and the pulse generators (coupling) (also see Heidenhain installation and adjustment instructions).

Check to make sure that the connectors are correctly wired and properly inserted.

If the customer has inserted plug/socket connectors in the measuring-circuit cables, a careful check must be made to ensure connection, strain relief and above all observance of the prescribed shielding.

The use of position encoders from other manufacturers may result in inaccuracy and surface quality problems beyond our control.

1.2.4 Cable laying

Power cables and control cables should be laid separately whenever possible. Do not produce ground loops, as such loops or non-regulation grounding may generate ripple voltage which would affect the speed controller setpoint. Smooth running of the motor at minimum speeds is then no longer guaranteed.

Care must be taken that the cables are run properly and that they are rolled carefully on the cable drum. Avoid kinking. Observe the permissible bend radii.
(Please refer to the Interface Description, Part 2, for information on connecting the cables.)

© Siemens AG 1990 All Rights Reserved 6ZB5 410-0EN02

1.2.5 Cables

Check all cables in accordance with the cable and equipment overview (refer to Interface Description, Part 2). This applies particularly to cables made up by the customer.

A random check should be made on at least one connector. Particular attention should be paid to elastomeric connections.

In the event of failure to comply with our guidelines, the relevant dealer must be notified and any necessary corrective measures instigated.

1.2.6 Shielding

The overall shields of all cables running to or from the control must be grounded at the control via the connectors (refer to Interface Description, Part 2). Only SINUMERIK connectors may be used, as other connectors cause interference problems.

1.2.7 Interference suppression

All d.c. and a.c. relays must be interference-suppressed using suitable means, as must a.c. or three-phase motors (e.g. lubricating pumps and the like). Observance of the prescribed measures for interference suppression should be checked on a random basis (also refer to the Instruction Manual).

1.2.8 Operator panel

Check to make sure that pushbuttons, keys, lamps, symbols and display are operational.

1.2.9 Overall state

Check the module mounts and blanking plates.
Make sure that the front panel screws have been tightened (ground connection).
Check to see that the accessory pack is complete.

The accessory pack must contain the following:

- Log book
- Complete parts list (the parts list is included with the original delivery note and must be inserted in the log book)
- Transparent cover plates and symbol overlays for keys
- Instruction manual

© Siemens AG 1990 All Rights Reserved 6ZB5 410-0EN02

1.2.10 Batteries

1.2.10.1 Lithium batteries

The battery for NC and PLC data backup is located at the lower right in the central controller. The battery is replaced from the front. To gain access to the battery compartment, the compartment cover on the power supply unit must be pushed in a downward direction. Always replace the battery while the controller is on power to ensure retention of the stored data (parts programs, setting data and so on).

The battery voltage is constantly monitored. Alarm 1 is displayed on the NC monitor if the voltage falls below 2.7 V.

Type:	Lithium battery:	3.4 V/5 Ah
	Backup time:	≥ 1 year
	Order No.:	6EW 1000-7AA

Also refer to the Instruction Manual.

1.2.10.2 Alkaline batteries

As of January 1991, the battery backup of all newly supplied SINUMERIK controls will change from lithium to alkaline batteries. The batteries will still be located at the lower right of the central controller. The lithium batteries cannot be replaced by alkaline batteries without some additional parts plug-in units, mounts and cables.

The SINUMERIK 840 will then contain 3 LR14 cell 1.5 V batteries with a backup time of ≥ 1 year. Poorer quality 1.5 V batteries can also be used at the expense of reduced backup time and an increased risk of battery depletion.

1.2.11 Jumpering

The initial jumper configurations for the various modules is discussed in Part 2 of the Interface Description.

The standard jumper configurations with module descriptions can be found in the Instruction Manual.

© Siemens AG 1990 All Rights Reserved 6ZB5 410-0EN02

1.2.12 Position control, input and measuring system resolution

In SINUMERIK, position control resolution and input resolution can be entered separately. In order to maintain a closed position control loop, however, it is necessary to coordinate the pulses from the digital measuring system with the control's precision capability.

The "unit (MS)" is used as unit of measurement for the position control resolution, the "unit (IS)" as unit of measurement for the input resolution.

The following applies:

1 unit (MS) = 2 units of position control resolution
1 unit (IS) = 1 unit of input resolution

Example:

If the position control resolution is 0.0005 mm and the input resolution is 0.001 mm, then
1 unit (IS) = 1 unit (MS) = 1 µm

Refer to NC MD 5002, NC MD 1800*, NC MD 524* and Section 5.6 for details on input, position control and display resolution.

1.2.13 Input units

Unit (MS) = 2 units of position control resolution (reference system MS)

e.g. 1 unit of position control resolution = 1/2 µm (MD 1800* = xxxx0100)
x.. is irrelevant in this case

→ 1 unit (MS) = 1 µm

Unit (IS) = 1 unit of input resolution (reference system IS)

e.g. 1 unit of input resolution = 1 µm (MD 5002 = x010xxxx)

→ 1 unit (IS) = 1 µm

VELO ...smallest unit used by the digital-analog converter (DAC) for setpoint conversion

In the case of a 14 bit DAC: $1\ \text{VELO} = \frac{10}{8192} = 1.22\ \text{mV}$

© Siemens AG 1990 All Rights Reserved 6ZB5 410-0EN02

1.3 Export version

The SINUMERIK 840 Software Version 2.1 is available also as Export Version.

In this version, all control functions are maintained except the 5-D Interpolation Option.

The relevant option bit can be set, but does not take effect (alarm when programming 5-D interpolation).

The Export Version is identified by an additional "E" behind the Order No. in the "Control Identification" display.

© Siemens AG 1990 All Rights Reserved 6ZB5 410-0EN02

2 Installation Checklist

840 M ☐ 840 T ☐ F No. _____

Installation sequence

① Section 1 of the Installation Guide, Interface Description Part 2, and the information presented in the Instruction Manual must be carefully observed!
② Copy the installation checklist, fill it out, and enclose it in the log book after installation.
③ Make a cross next to Yes or No after each section has been completed.
④ Enter all required values where stated.

Information relating to the individual sections is provided in the Installation Guide.

Initial installation

Name ..... Office ..... Date .....

Manufacturer ..... Address.....

Re-installation

Name ..... Office ..... Date .....

Customer ..... Address.....

1. Are the prerequisites for installation per Section 1 fulfilled? Yes ☐ No ☐

2. Visual inspection: Mains connection, EMERGENCY STOP, grounding concept, grounding of the position encoders, cabling, shielding, external machine control panel, input/output submodules, overall state OK? Yes ☐ No ☐

3. Version of the control software:
   NC CPU .....
   INT DMP .....
   PLC .....
   UMS .....
   KYRU .....

4. Voltage test:

Power supply unit in the central controller	230 V AC + 10 % - 20 %, 50/60 Hz ±5Hz.
Monitor	230 V AC + 10 % - 20 %, 50/60 Hz ±5Hz.
Operator panel	24 V DC (20 to 30 V)
Machine control panel	24 V DC (20 to 30 V)

© Siemens AG 1990 All Rights Reserved 6ZB5 410-0EN02

5. Standard installation completed and customer specific machine data entered? Yes ☐ No ☐

6. PLC program entered and tested (safety functions)? Yes ☐ No ☐

7. Position control loops of axes installed and the following checked:
   Axis speeds / tachogenerator compensation / multigain / servo gain (K_V factor) / acceleration / exact positioning / position control loop monitors / analog spindle speed / spindle positioning / traversing ranges?
   Yes ☐ No ☐

8. All conventional functions tested? Yes ☐ No ☐
   (10 mm programmed = 10 mm on machine)
   Function test performed with test program (by customer)? Yes ☐ No ☐

9. Were backup copies made of the following data:

   - NC machine data Yes ☐ No ☐
   - PLC machine data Yes ☐ No ☐
   - Cycle machine data Yes ☐ No ☐
   - Cycle setting data Yes ☐ No ☐
   - Zero offsets Yes ☐ No ☐
   - NC setting data Yes ☐ No ☐
   - R parameters Yes ☐ No ☐
   - Tool offsets Yes ☐ No ☐
   - UMS (as source floppy!) Yes ☐ No ☐
   - PLC user program + data blocks Yes ☐ No ☐

   Were these data deposited at the machine? Yes ☐ No ☐

   Installation checklist completely filled out (including options), inserted in the log book and deposited at the control? Yes ☐ No ☐

10. Were the following functions explained to the customer:

    Drift compensation, reference point adjustment Yes ☐ No ☐

    Marginal software conditions as per revision bulletin Yes ☐ No ☐

    Did the customer sign the installation report? Yes ☐ No ☐

Signatures

1. Initial installation **2. Re-installation**

© Siemens AG 1990 All Rights Reserved 6ZB5 410-0EN02

3 Voltage and Functional Tests

3.1 Voltage test

3.1.1 Power supply

- Power supply unit in the CC — 6EW1 861-2AE (5 V/40 A)
  Voltage: 230 V + 10%, -20%

The electrical operating conditions and the limit ratings must be checked ***prior*** to powering up (refer to Interface Description Part 2).

3.1.2 +5 V DC

The 5 V voltage can be tested on all power supply units over the socket provided for this purpose, and can be adjusted using a potentiometer. The voltage is factory set to approximately +5.15 V (to compensate for voltage drops on the lines), normally making adjustments unnecessary.

A green LED on the frontplate of the NC power supply unit indicates that the power supply unit is operating properly.

3.1.3 External +5 V DC

The 6EW 1861-2B power supply unit has an additional voltage, adjustable in the range 5 V to 6.5 V, to enable the use of pulse encoders more than 35 meters away.

In order to enable the power supply unit to forward this adjustable voltage to the relevant pulse encoders via the measuring-circuit modules, these modules must be jumpered accordingly.

Measuring circuit module jumper
6FX 1121-4B . . . (DAC)
6FX 1145-6B . . . (HMS), see Section 10.

© Siemens AG 1990 All Rights Reserved 6ZB5 410-0EN02

The adjustable voltage is set as follows on the power supply unit:

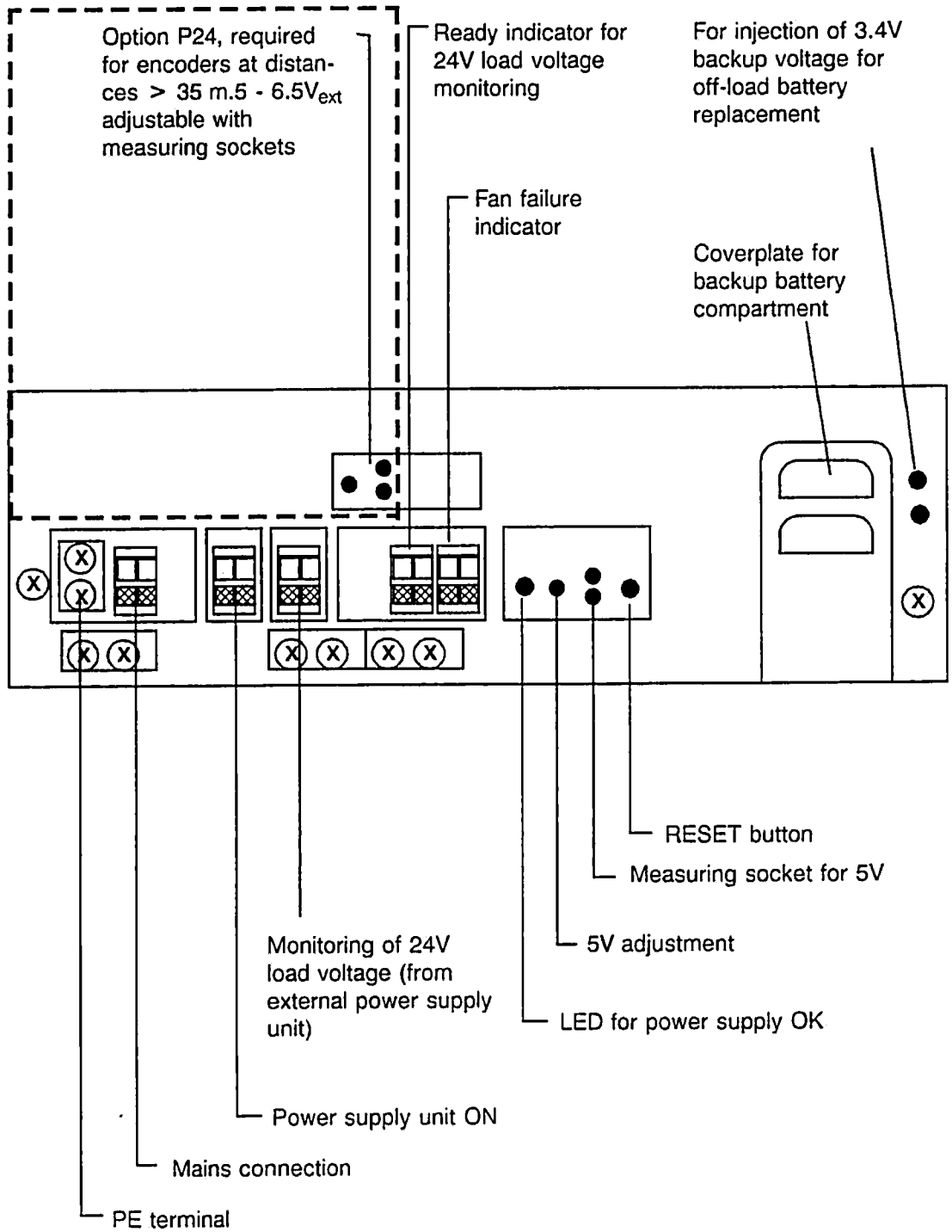

© Siemens AG 1990 All Rights Reserved 6ZB5 410-0EN02

3.1.4 Temperature limit

The ambient temperature must be between 0 and 55 °C.

3.1.5 Fan monitoring

Each of the two fans in the NC power supply unit is monitored by an NTC thermistor. A response from the thermistors does not necessarily cause a direct NC shutdown, as such a response merely drives the K648 relay, which the machine manufacturer must himself evaluate.

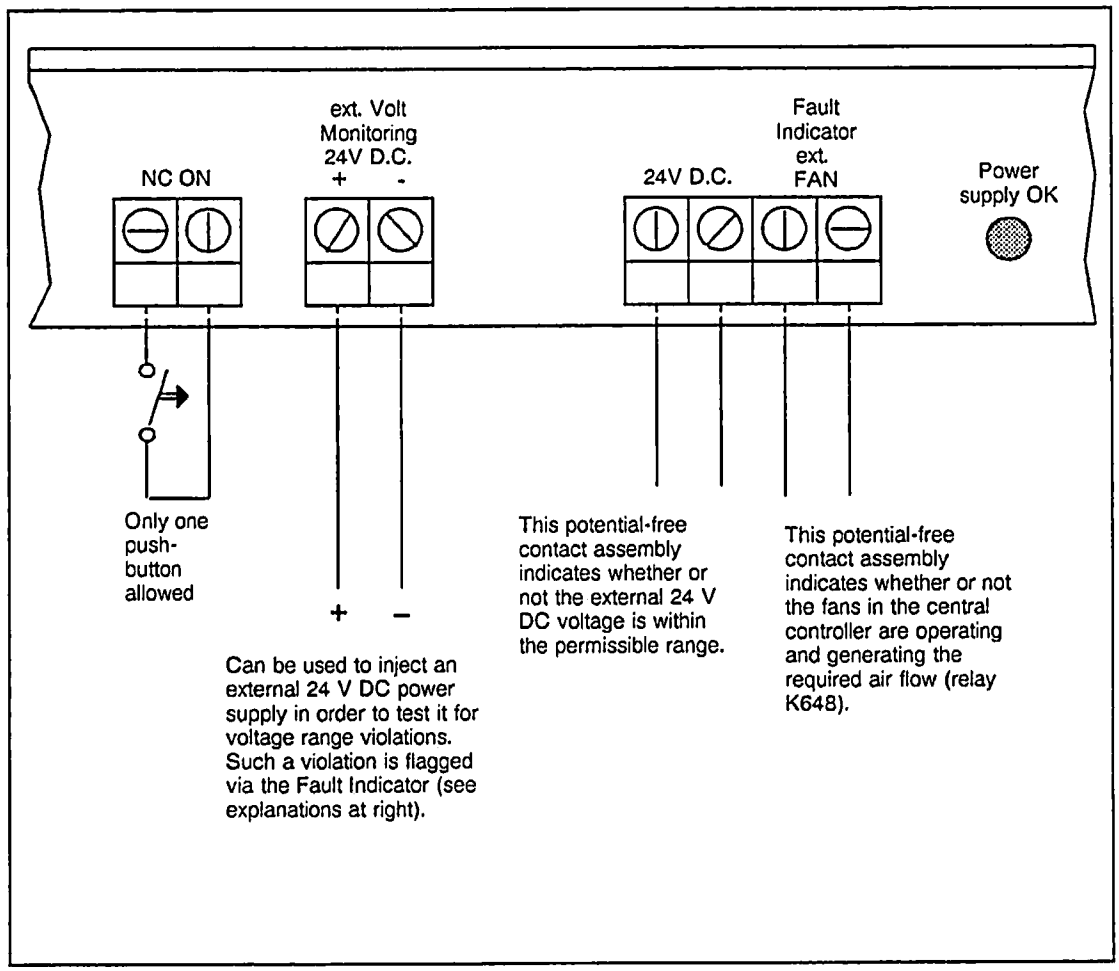

Central controller

© Siemens AG 1990 All Rights Reserved 6ZB5 410-0EN02

3.2 Functional test

3.2.1 CPU monitoring

The LEDs on NC CPU 6FX 1123-1CA00 and interface CPU 6FX 1123-3CA00 provide information on the status of the control.

When the monitor responds (LEDs go on), the axes are shut down and the PLC outputs are deactivated.

Both LEDs light up during the control run-up (Power On routines). These routines ascertain which modules are plugged into the subrack.

The NC CPU and the IF CPU monitor each other. If one of them fails to respond during execution of the Power On routines, the other remains at STOP.

LEDs remain on after power-up or go on during operation in the following situations:

- Incorrect module jumpering
- Defective module
- The CPU is currently in a loop or was in a loop for a longer period of time, causing the monitor to respond

© Siemens AG 1990 All Rights Reserved 6ZB5 410-0EN02

3.2.2 EPROM check

The checksum of the system program memory is generated whenever the control is switched on (Power On routines) and during cyclic operation. The control flags discrepancies between reference and actual checksum in different ways.

The following error messages are possible:

- Checksum Error
  EPROM MODULE NUMBER is displayed when the checksum of one or more EPROMs on an EPROM submodule is incorrect.

Breakdown of the EPROM number

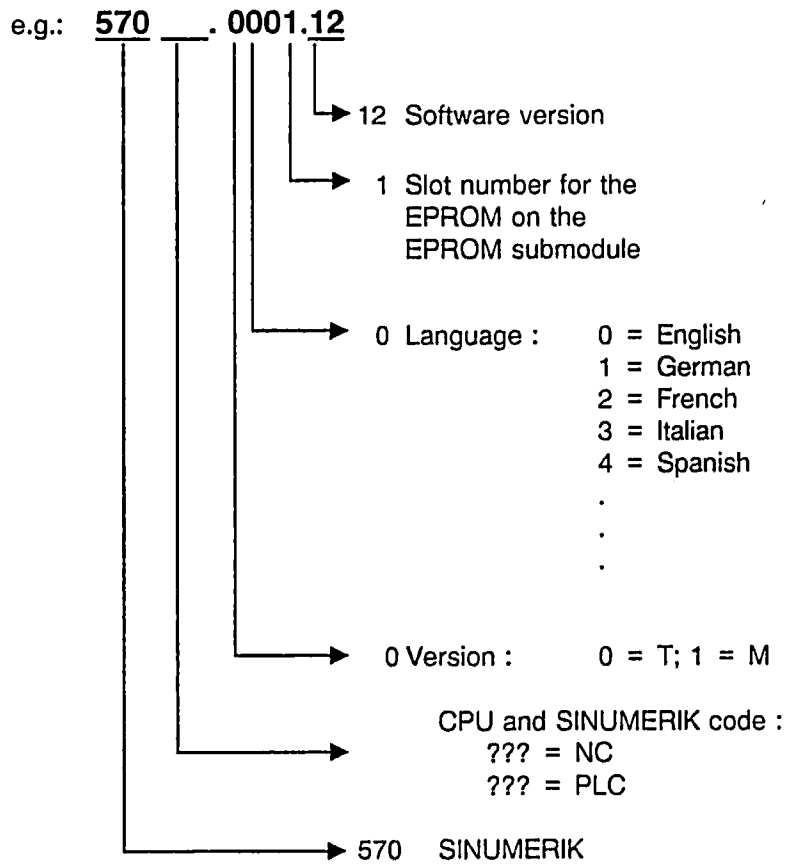

© Siemens AG 1990 All Rights Reserved 6ZB5 410-0EN02

3.2.3 Brightness control

The SINUMERIK 840 is available with different monitors.

14" colour monitor
Monochrome/colour slimline operator panel

CAUTION

High voltage of approx. 16 kV in the VDU, at the high-voltage transformer, at the anode lead and at the anode terminal on the CRT.

The contrast on the monochrome monitor can be adjusted using a potentiometer located in the VDU and accessible from the outside. The contrast can also be adjusted at the monitor adapter using a 10-turn potentiometer. However, this potentiometer is not accessible from the outside.

The contrast on the colour monitor can be adjusted with a potentiometer, but this potentiometer is virtually inaccessible from the outside.

Contrast and focus can also be adjusted using potentiometers, but to gain access to these potentiometers necessitates the removal of the lower portion of the monitor chassis.

As a rule, the vertical and horizontal hold, the image height, the image width, the contrast and so on are correctly set at the factory. Changes in the potentiometer settings on the monitor board may be made only by trained personnel and with the proper tools (screwdriver made of epoxy resin).

The guidelines issued by the relevant authorities in your country must be observed.

© Siemens AG 1990 All Rights Reserved 6ZB5 410-0EN02

4 Standard Installation (in brief)

The following sequence for a standard SINUMERIK 840 installation is mandatory:

1. The control and the external components must be connected as described in the SINUMERIK 840 Instruction Manual.
2. Cabling and electrical operating conditions must be checked as defined in the Interface Description, Part 2.
3. Observe Section 1 of the Installation Guide carefully.
4. Installation of the axes and spindles, including the speed controller. See Sections 5 and 6.
5. Servo disable set at the hardware level for all axes and spindles.
6. All input/output modules and handwheels connected.
7. NC MD and PLC MD entered.
8. Observe Section 4.1 carefully.
9. All data, in particular NC MD and PLC MD, must be checked for validity (see Sections 8 and 9).
10. Observe Section 2 of the Installation Guide carefully and enclose the installation checklist in the completed log book.

© Siemens AG 1990 All Rights Reserved 6ZB5 410-0EN02

4.1 Standard installation as flowchart

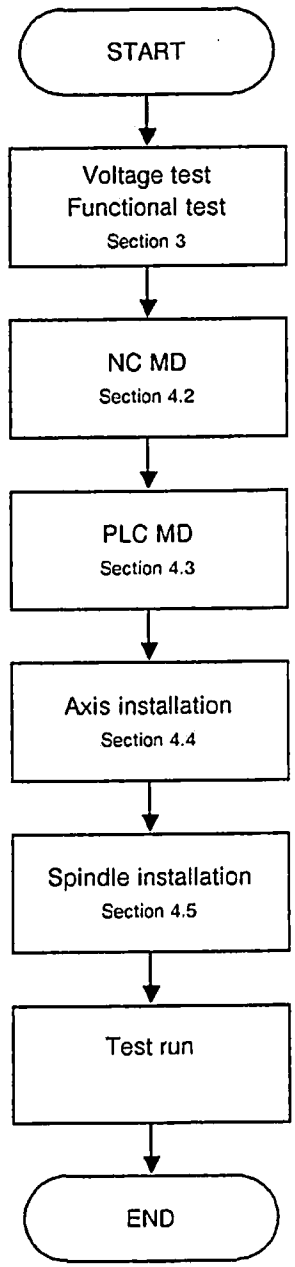

© Siemens AG 1990 All Rights Reserved 6ZB5 410-0EN02

4.2 Enter NC machine data

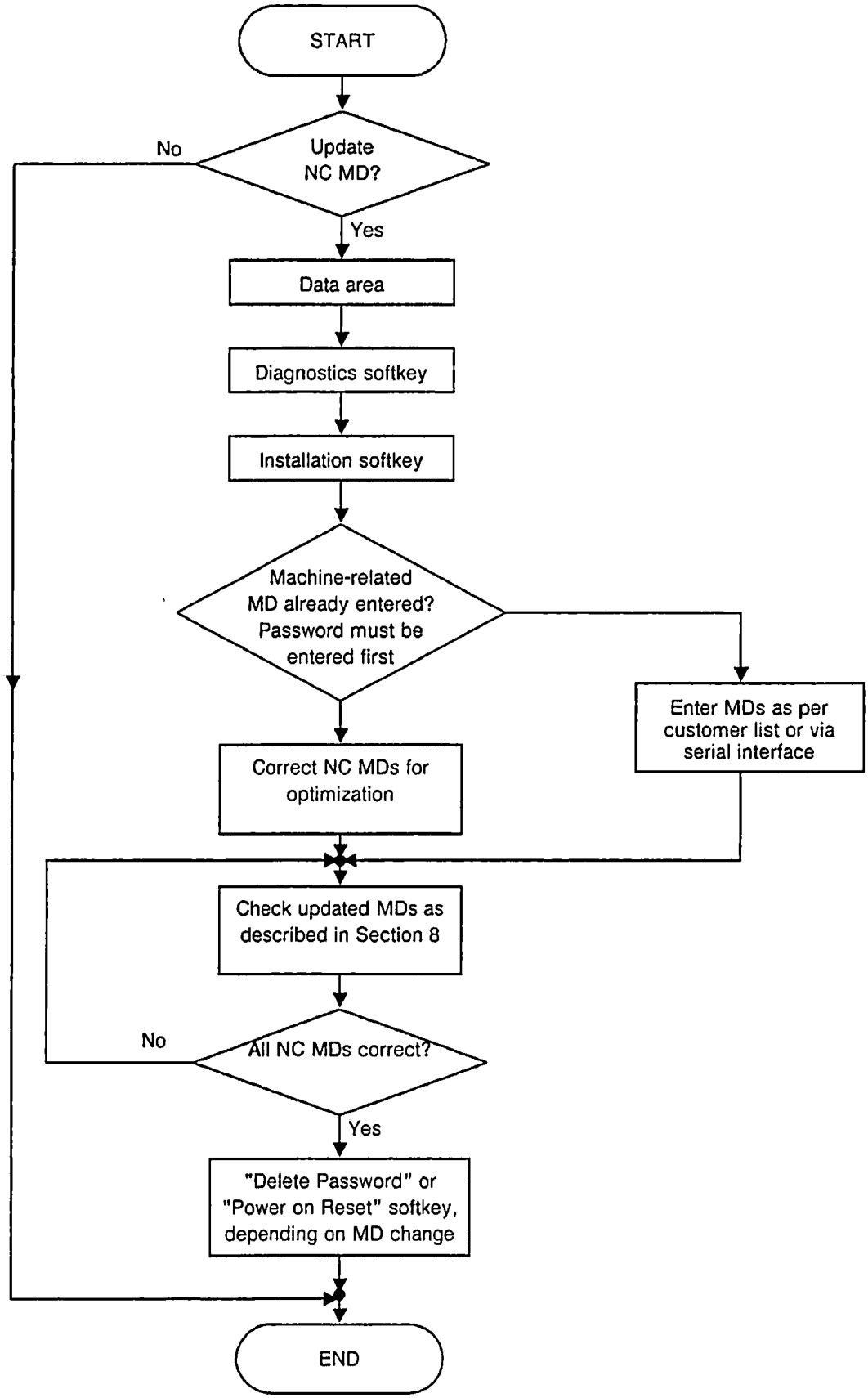

© Siemens AG 1990 All Rights Reserved 6ZB5 410-0EN02

4.3 Enter PLC machine data

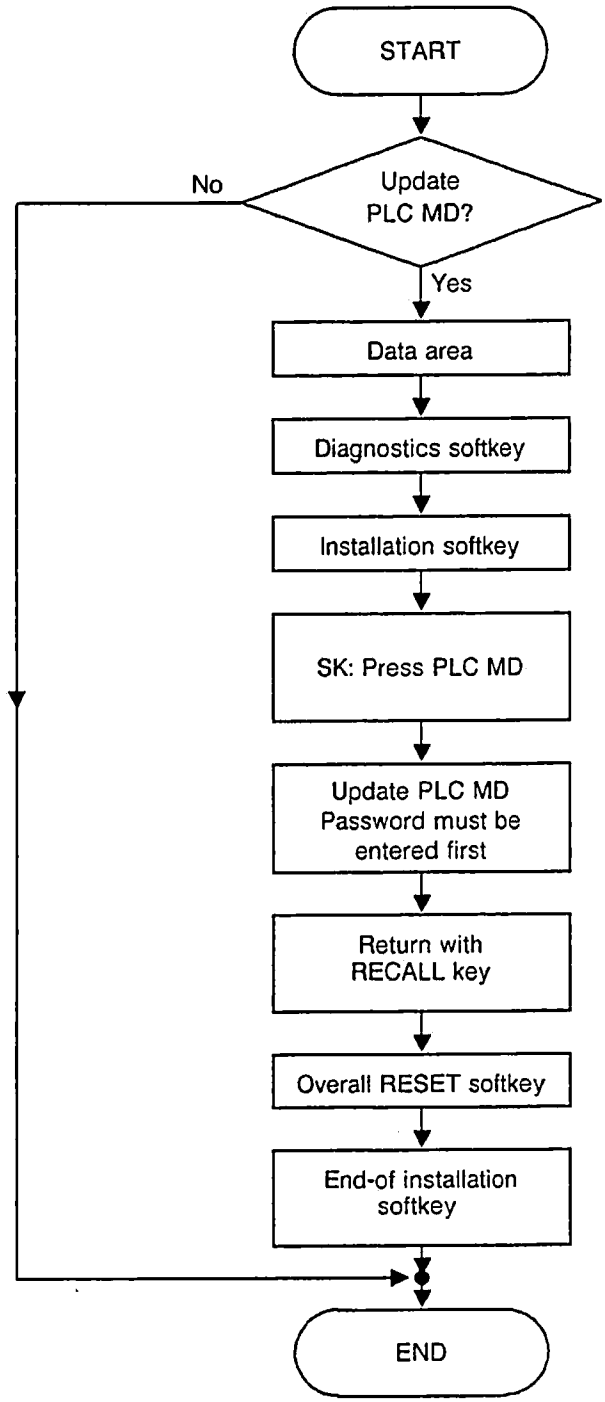

© Siemens AG 1990 All Rights Reserved 6ZB5 410-0EN02

4.4 Axis installation (simplified)

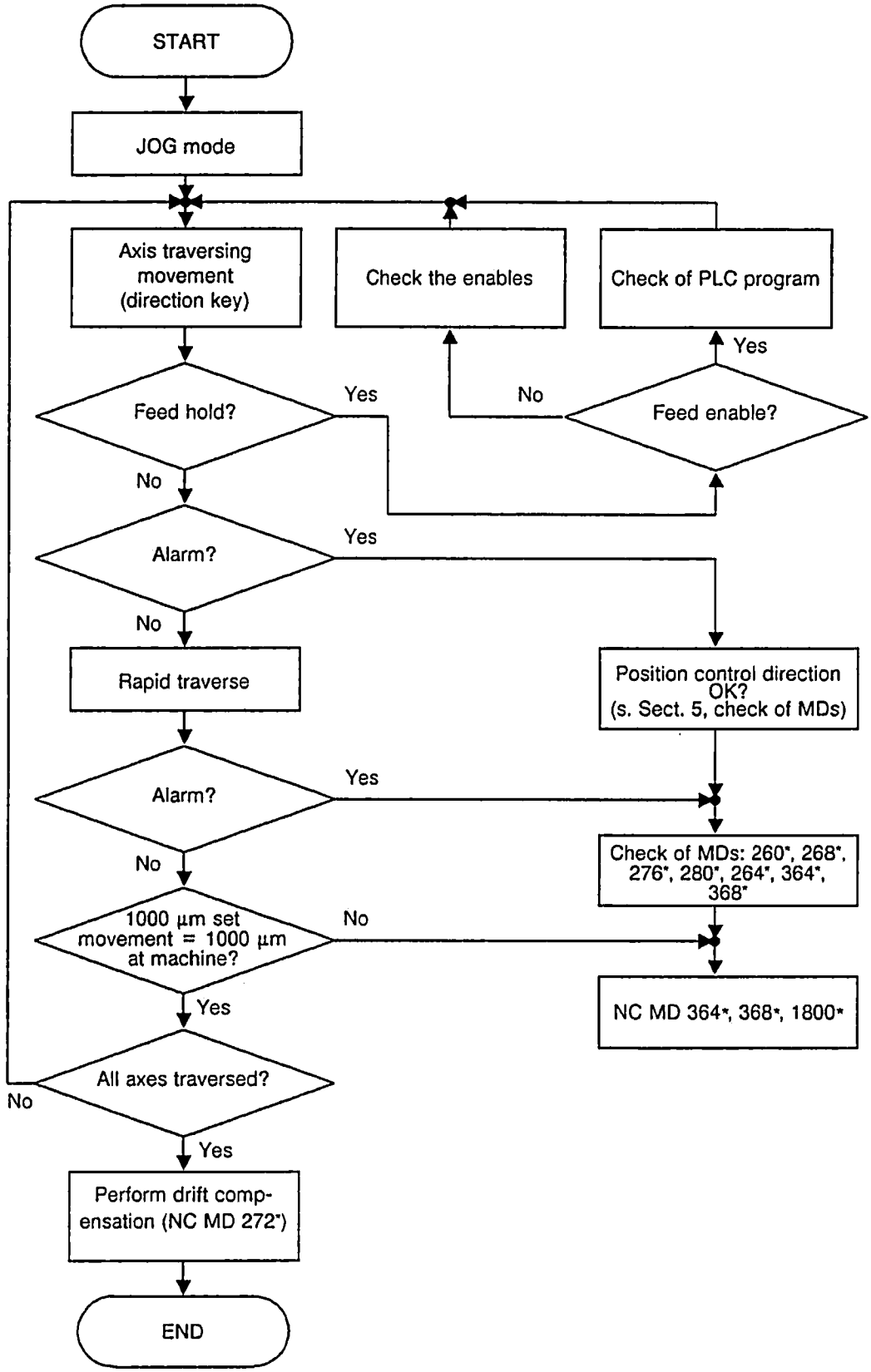

© Siemens AG 1990 All Rights Reserved 6ZB5 410-0EN02

4.5 Spindle installation (Example: one spindle)

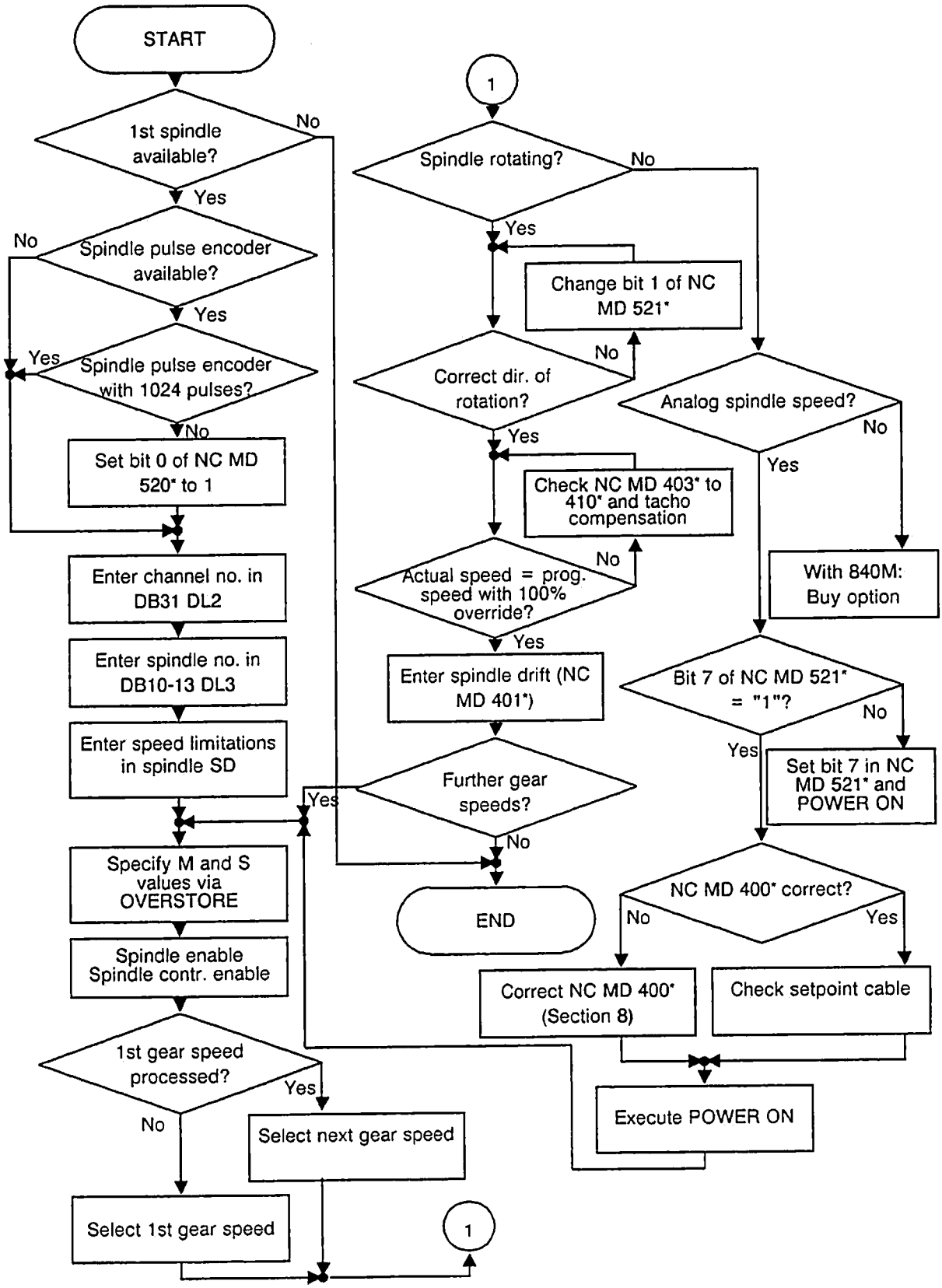

© Siemens AG 1990 All Rights Reserved 6ZB5 410-0EN02

5 Axis Installation

5.1 Drive optimization

5.1.1 Checking and setting the control direction of the feed axes

Simplified block diagram of the drive control system:

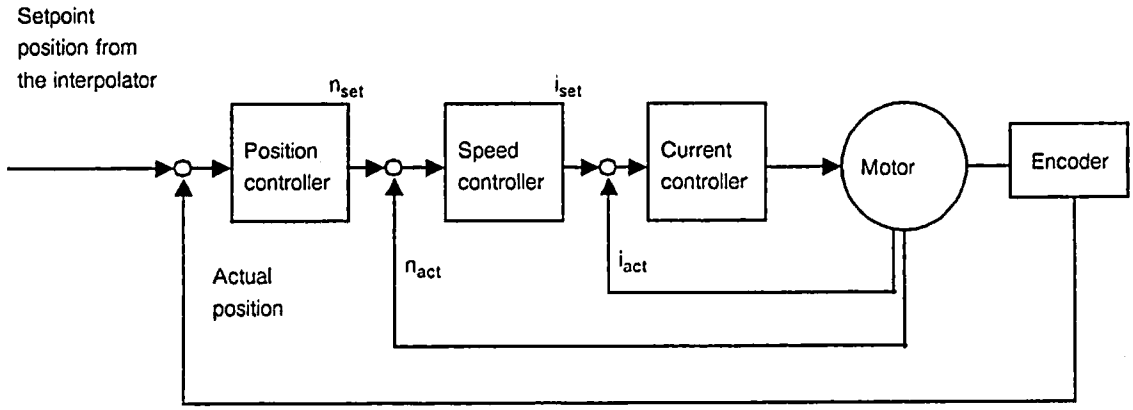

Before the position control system is put into operation, the speed controller and the current controller for the drive must be installed and optimized. When the position control system is installed, the actual position must be checked before the setpoint position is optimized.

The following must be clarified before beginning work:

- Travel direction of the feed axis (as per customer specification or in accordance with the ISO standard)
- Polarity of the set speed voltage on the control unit for axis movements in a positive direction (as per customer specification or ascertained by performing a test using a battery box)

The control direction of the position control system can be influenced via bit 1 of NC MD 564* (which changes the sign of the setpoint position) and bit 2 of NC MD 564* (which changes the sign of the actual position) - see flowchart.

© Siemens AG 1990 All Rights Reserved 6ZB5 410-0EN02

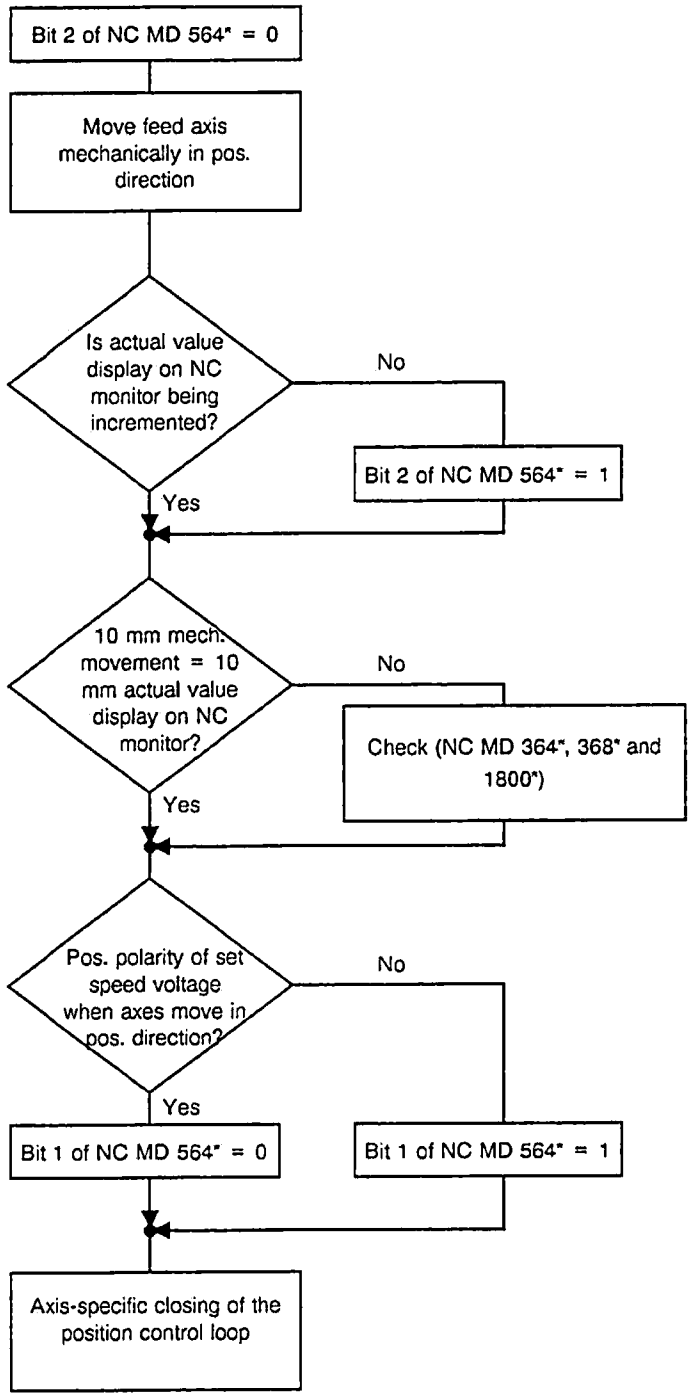

© Siemens AG 1990 All Rights Reserved 6ZB5 410-0EN02

5.1.2 Defining the maximum setpoint and tacho compensation

The axis-specific maximum speeds (NC MD 280*) required by the customer are assigned to a tacho voltage.

It must be noted that approximately 5 % control tolerance is required.

The power limits are set by the measuring-circuit board (10 V) or the control unit.

Defining the maximum setpoint:

The setpoint is defined via NC MD 268*, and limits the output voltage from the NC. The limiting value defined in NC MD 268* must not be reached during operation.

The maximum permissible setpoint value is 10 V.
Converted into input units, this means: 10 V $\hat{=}$ 8191 units

The maximum setpoint must accord with the drive control unit's maximum permissible input voltage.

a) Maximum permissible drive control unit input voltage $\geq$ 10 V:
Entry in NC MD 268* : 8191 units

Because of the 5 % control tolerance, the maximum axis speed is already attained at 9.5 V.

b) The drive control unit must be limited to an input voltage $<$ 10 V
Entry in NC MD 268* : $<$ 8191 units

Example

The unit entry for setpoint values of up to 5 V is 4100.

The maximum axis speed must be attained at 4 V.

The setpoint value should be as high as possible, as a higher setpoint voltage makes for a better control response.

© Siemens AG 1990 All Rights Reserved 6ZB5 410-0EN02

5.1.3 Multgain NC MD 260*

A multiplication factor (multgain NC MD 260*) has to be input to calculate the setpoint speed. This permits axes with different maximum speeds to be traversed making full utilization of the specified setpoint.

Axes traversed with continuous path control must have the same position control loop gain factor. For this reason, the multiplication factor (multgain) must be calculated for each axis according to the following formula:

$$\text{Multgain} = \frac{3 \cdot 10^7}{V_{max}\ [1000\ \text{units(MS)/min}]} \cdot \frac{U_{max}\ [V]}{10\ [V]}$$

Example:

max. axis speed $V_{max} = 20\text{m/min}$ => position control resolution $0.5 \cdot 10^{-3}$ mm
=> 1 unit (MS) $= 2 \cdot 0.5 \cdot 10^{-3}$ mm $= 1 \cdot 10^{-3}$ mm => $V_{max} = 20000$ (1000 units(MS)/min]
=> setpoint voltage at $V_{max} =$ **9.5 V**

$$\text{Multgain} = \frac{3 \cdot 10^7}{20000\ [1000\ \text{units(MS)/min}]} \cdot \frac{9.5\ [V]}{10\ V} = \mathbf{1425}\ \left[\frac{\text{min}}{1000\ \text{units(MS)}}\right]$$

Note:

In conjunction with an inch input system (IS) the maximum speed (MD 280*) has to be converted into mm/min and entered as V_{max} in the formula.

In conjunction with a metric input system (IS), the maximum speed (MD 280*) must be converted into inch/min and entered as V_{max} in the formula.

Additional multgain calculation examples:

1) Input system resolution (IS) $= 1 \cdot 10^{-3}$ mm → 1 unit (IS) $= 1 \cdot 10^{-3}$ mm
Measuring system resolution (MS) $= 0.5 \cdot 10^{-3}$ mm → 1 unit (MS) $= 2 \cdot 0.5 \cdot 10^{-3}$ mm $= 1 \cdot 10^{-3}$ mm
Max. speed $= 10^{m}/_{min}$ → MD 280* = 10000 [1000 units $^{IS}/_{min}$]
Tachogenerator compensation to 9V

Conversion from V_{max} to Measuring system resolution:
$V_{max} = 10\text{m/min} = 10000$ [1000 units $^{MS}/_{min}$]

$$\text{Multgain} = \frac{3 \cdot 10^7}{10000\ [1000\ \text{units}\ ^{MS}/_{min}]} \cdot \frac{[V]}{10\ [V]} = \mathbf{2700}$$

© Siemens AG 1990 All Rights Reserved 6ZB5 410-0EN02

2) Input system resolution (IS) = $1 \cdot 10^{-3}$ mm → 1 unit (IS) = $1 \cdot 10^{-3}$ mm
Measuring system resolution (MS) = $0.5 \cdot 10^{-4}$ mm → 1 unit (MS) = $2 \cdot 0.5 \cdot 10^{-4}$ mm = $1 \cdot 10^{-4}$ mm
Max. speed = 4 $^{m}/_{min}$ → MD 280* = 4000 [1000 units $^{IS}/_{min}$]
Tachogenerator compensation to 9V

Conversion from V_{max} to measuring system resolution:
V_{max} = 4 $^{m}/_{min}$ = 40000 [1000 units $^{MS}/_{min}$]

$$\text{Multgain} = \frac{3 \cdot 10^7}{40000\ [1000\ \text{units}\ ^{MS}/_{min}]} \cdot \frac{9\ [V]}{10\ [V]} = \mathbf{675}$$

3) Input system resolution (IS) = $1 \cdot 10^{-4}$ inch → 1 unit (IS) = $1 \cdot 10^{-4}$ inch
Measuring system resolution (MS) = $0.5 \cdot 10^{-3}$ mm → 1 unit (MS) = $2 \cdot 0.5 \cdot 10^{-3}$ mm = $1 \cdot 10^{-3}$ mm
Max. speed = 400 $^{inch}/_{min}$ → MD 280* = 4000 [1000 units $^{MS}/_{min}$]
Tachogenerator compensation to 9V

Conversion from V_{max} to measuring system resolution:

$$V_{max} = 400\ \frac{\text{inch}}{\text{min}} = 400\ \frac{\text{inch}}{\text{min}} \cdot \frac{25.4\ \text{mm}}{\text{inch}} = 10160\ \frac{\text{mm}}{\text{min}} = 10160\ [1000\ \text{units}\ ^{MS}/_{min}]$$

$$\text{Multgain} = \frac{3 \cdot 10^7}{10160\ [1000\ \text{units}\ ^{MS}/_{min}]} \cdot \frac{9\ [V]}{10\ [V]} = \mathbf{2657}$$

4) Input system resolution (IS) = $1 \cdot 10^{-3}$ mm → 1 unit (IS) = $1 \cdot 10^{-3}$ mm
Measuring system resolution (MS) = $0.5 \cdot 10^{-4}$ inch → 1 unit (MS) = $2 \cdot 0.5 \cdot 10^{-4}$ inch
Max. speed = 20 $^{m}/_{min}$ → MD 280* = 20000 [1000 $^{unit\ IS}/_{min}$]
Tachogenerator compensation to 9V

Conversion from V_{max} to measuring system resolution:

$$V_{max} = 20\ ^{m}/_{min} = 20000\ \frac{\text{mm}}{\text{min}} \cdot \frac{\text{inch}}{25.4\ \text{mm}} = 787.4\ \frac{\text{inch}}{\text{min}} = 787.4\ [1000\ \text{units}\ ^{MS}/_{min}]$$

$$\text{Multgain} = \frac{3 \cdot 10^7}{787.4\ [1000\ \text{units}\ ^{MS}/_{min}]} \cdot \frac{9\ [V]}{10\ [V]} = \mathbf{34290}$$

© Siemens AG 1990 All Rights Reserved 6ZB5 410-0EN02

5.1.4 Servo gain factor K_V NC MD 252*

To achieve only negligible contour deviations with continuous path control, a high K_V (servo gain) factor (NC MD 252*) is required.

If the K_V factor is too high, however, instability, overshoots and possibly excessive machine loads result.

The maximum permissible K_V factor depends on:

- the drive configuration
  (rise time, acceleration and braking ability).
- the quality of the machine

The K_V factor is defined as

$$K_V = \frac{\text{Speed}}{\text{Following error}} \qquad \frac{[\text{m/min}]}{[\text{mm}]}$$

$\frac{\text{m/min}}{\text{mm}}$ is the unit of the K_V factor according to VDI standard

If an empirical value for the K_V factor is known for the machine, set this value and check for overshooting or instability.

Good speed controller optimization is a precondition for a correct K_V factor setting.

K_V factor adjustment

Reduce the acceleration (NC MD 276*). The overshoot behaviour is decisive for evaluating the maximum K_V factor. The acceleration must therefore be set at an accordingly low level to ensure that the drive remains below its current threshold.

If the drive is intended to have acceleration of 1 m/s², adopt a cautious approach and reduce to one-half of the value

0.5 m/s² ≙ input 50

© Siemens AG 1990 All Rights Reserved 6ZB5 410-0EN02

Enter the servo gain according to the following conversion formula in NC MD 252*:

$$K_V\ (0.01\ s^{-1}) = \frac{5000}{3} \cdot K_V \left[\frac{m/min}{mm}\right]$$

$$= 1666 \cdot K_V \left[\frac{m/min}{mm}\right]$$

The numerical value 1666 is thus input for the K_V factor 1.

To evaluate the starting conditions and determine whether the set maximum value has been selected correctly, use the dynamically most unfavourable axis that contributes to continuous path control.

Measure the setpoint voltage n_{set} to the speed controller with an oscillomink ink jet plotter or storage oscilloscope. Traverse at various feedrates.

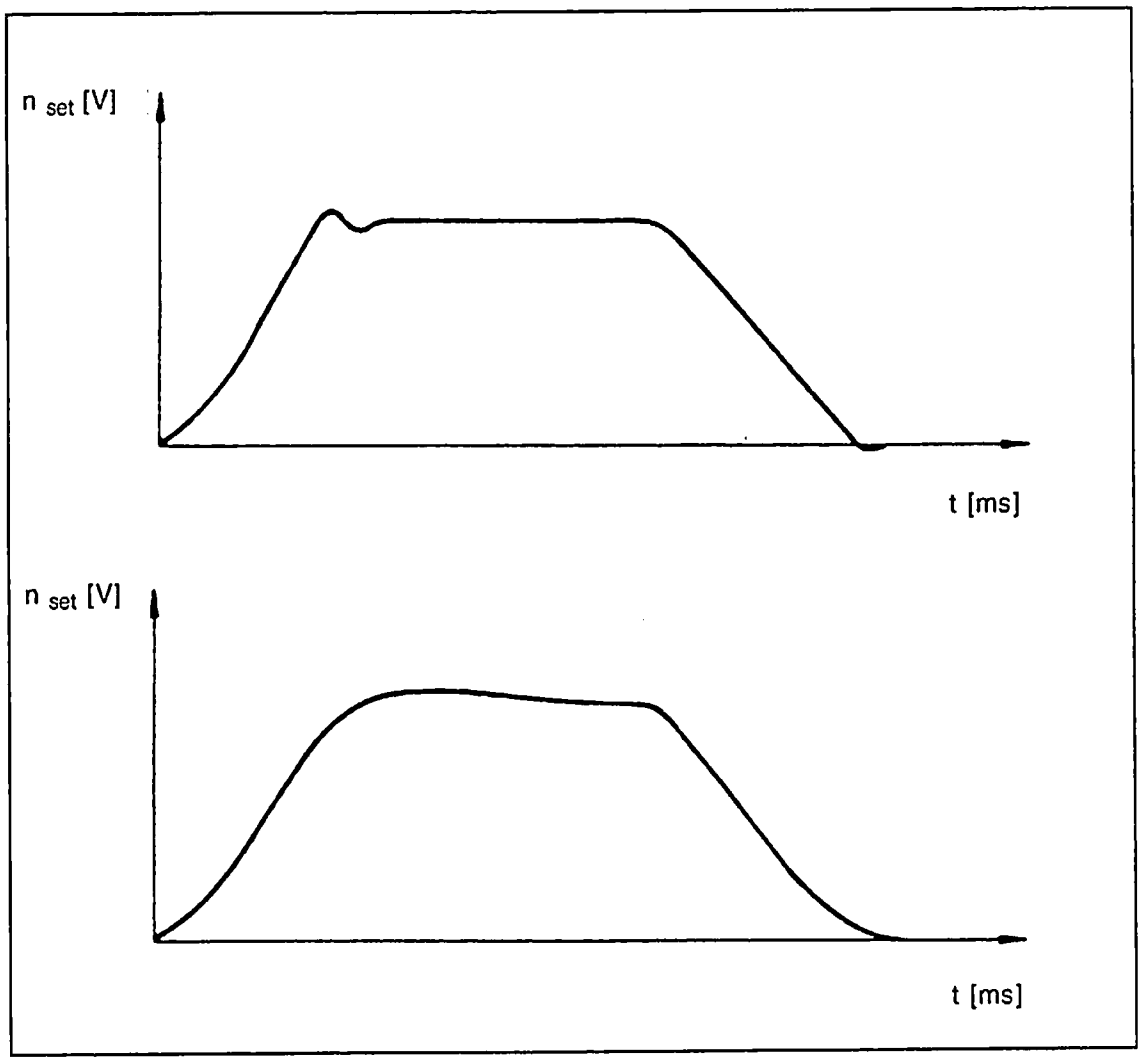

Especially deceleration can be observed with high voltage gain on the oscilloscope or oscillomink.

© Siemens AG 1990 All Rights Reserved 6ZB5 410-0EN02

Overshooting may also have one of the following causes:

- Acceleration too great (current threshold is reached)
- Excessive rise time of speed circuit
- Fault in speed controller (re-optimization may be necessary)
- Mechanical backlash
- Displaced location of mechanical components
- Load fluctuations (vertical axis)

For safety reasons, select a K_V factor that is at least 10 % lower than the maximum possible factor.

Important:

Axes that operate together with continuous path control must have the same K_V factor.

K_V factor check

Refer to the service display for the individual axes (see diagnosis description for selection) to determine the size of the following error. The displayed value is the same with both positive and negative traverse directions if the drift is compensated.

Subsequently check the input K_V factor of all axes on traversing with reference to the following error display.

Exact continuous path control requires that the dynamic behaviour of the axes is the same, i.e. the same following error must occur at the same speed.

In the event of discrepancies, the differences must be compensated at the multgain or speed actual value potentiometer.

5.1.5 Acceleration NC MD 276*

The specified accelerations

$$b \times 10^{-2} \ [m/s^2]$$

are used to accelerate and decelerate the axes.

This enables the axes to accelerate to the relevant speed and assume position quickly, accurately and with the least possible wear and tear on the machine.

The customer must be questioned as to the machine's suitability for continuous deceleration/acceleration. This value (if it does not overtax the drive) is entered in NC MD 276*.

This value normally lies in the range from 0.3 m/s^2 to 2 m/s^2.

© Siemens AG 1990 All Rights Reserved 6ZB5 410-0EN02

Checking/determining the acceleration values

Setting:	NC MD 276*
Criterion:	Overshoot-free acceleration or positioning at rapid traverse rate (acceleration stop limit). Under maximum load conditions (heavy workpieces on the machine table)
Measuring equipment:	Recorders or storage oscilloscopes
Measuring point:	Setpoint speed and possibly actual current and speed controller output

Once acceleration has stopped, the axes travel at maximum speed (rapid traverse) and the actual current values and possibly the n-controller output are recorded. This makes it possible to ascertain whether or not the current limit was reached. The drive can reach the current limit briefly, but this must occur only in the rapid traverse range. Speed control and current control must be back within the normal range (current limit not attained!) before the rapid traverse rate or position has been reached.

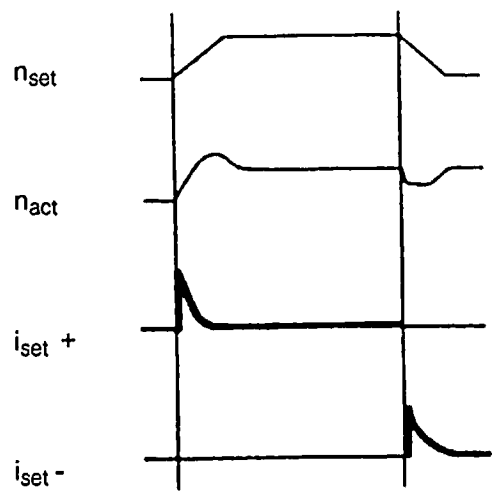

Example of a well-chosen acceleration value

In this example, the current limit is reached (recognizable by the fact that the actual current retains its maximum value over a period of time). A **lower acceleration** must be chosen in this case.

Relation between acceleration and actual current

Minor changes in the load (such as sluggishness or the effects of lubrication) must not cause immediate reaching of the current limit. A 10 % lower acceleration value should therefore be specified.

If the customer wishes it, the acceleration can be further reduced to protect the machine against excessive wear and tear. The various axes, including interpolating axes, may be assigned different accelerations.

© Siemens AG 1990 All Rights Reserved 6ZB5 410-0EN02

5.1.6 Position monitoring

Coarse exact stop and fine exact stop tolerance ranges (NC MD 204* and 208*)

The approached position is checked. In automatic mode, the next block is not started if the following error exceeds the value entered in NC MD 204* to 208*.

Setting

The positioning accuracy depends on the quality of the position control and speed control loops.

The normal deviation is ascertained by observing the following error at zero speed (i.e. in the "at rest" state).

Depending on the customer's requirements and the positioning accuracy attained, the specified value should lie in the range from 10 µm to 50 µm, but should be at least double the maximum following error deviation at zero speed.

Zero-speed monitoring (NC MD 212*)

The machine manufacturer must try to keep the position deviation to a minimum, i.e. under the exact stop tolerance range set in NC MD 204* to 208*. The value specified for zero-speed monitoring (NC MD 212*) should be approximately double that entered in NC MD 204* to 208*. Alarm 112* is triggered if one of the axes is forced out of position (clamping active and cancellation of the servo enable signal) at zero speed (after the time set in NC MD 372* has elapsed).

Positioning is monitored in order to ensure that an axis reaches its position within the specified time period (in dependence on K_V factor, acceleration, ...). The monitoring data are set in NC MD 212* and NC MD 372*. A detailed description is given under NC MD 372*.

© Siemens AG 1990 All Rights Reserved 6ZB5 410-0EN02

5.1.7 Contour monitoring

Contour monitoring is based on the following principle:

At the end of an acceleration or deceleration phase, the following error of a position controlled axis remains constant. Changes in the drive load (such as interrupted cutting operation or heavy stock removal work) are regulated by the speed controller (PI action). Only when a drive overload (such as tool breakage) forces the speed controller to reach a limit does a change occur in the following error while the set speed remains constant. This change is used as trigger criterion for the contour monitor.

A tolerance band can be defined for maximum contour deviation in order to prevent contour monitoring from being triggered by minor speed variations. In addition, a delay time must elapse after each variation in speed before the monitor can be activated.

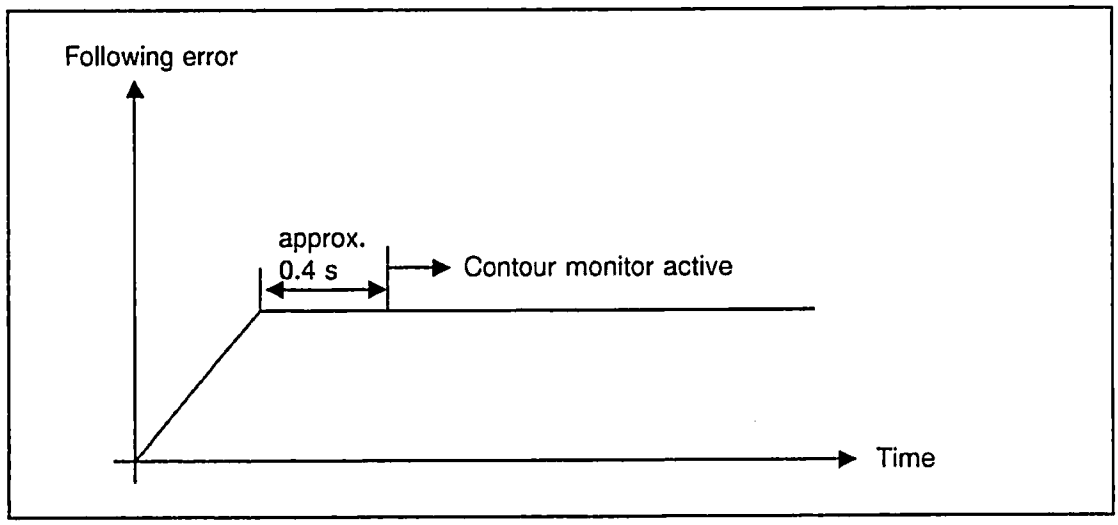

Activating contour monitoring at constant setpoint speed

Accurate contouring is possible only by when the loop gain is identical for all axes (including rotary axes).

The K_V factor should be as high as possible.

The loop gain is determined not only by the values specified in NC MD 252* (K_V) and NC MD 260* (multgain), but also by the tacho compensation in the speed controller, by the variable increment weighting, the gear ratio, and so on.

NC MD 332* and NC MD 336* are used to influence contour monitoring.

The speed at which contour monitoring is to take effect is entered in NC MD 336* in 1000 units/min (IS). If zero is entered, the contour monitor is active even when the axes are at rest. When the axes are at rest, the zero-speed monitor also checks for excessive axis movement.

The tolerance band for contour monitoring is entered in NC MD 332*.

© Siemens AG 1990 All Rights Reserved 6ZB5 410-0EN02

The input value for the required tolerance band can be determined from the following set of curves (0.5 µm position control resolution):

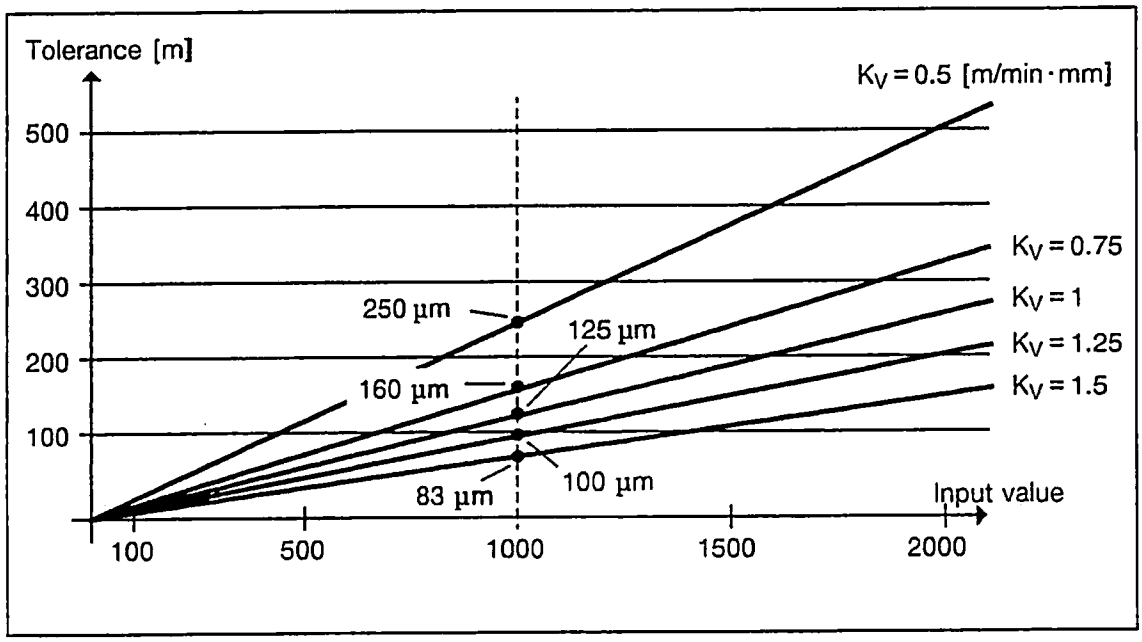

The input value for the tolerance band can be computed using the following formula (0.5 µm position control resolution).

$$\text{Tolerance band [µm]} = \frac{\text{NC MD 332* x 125}}{K_V \text{ factor x 1000}}$$

The selected tolerance band is placed as follows:

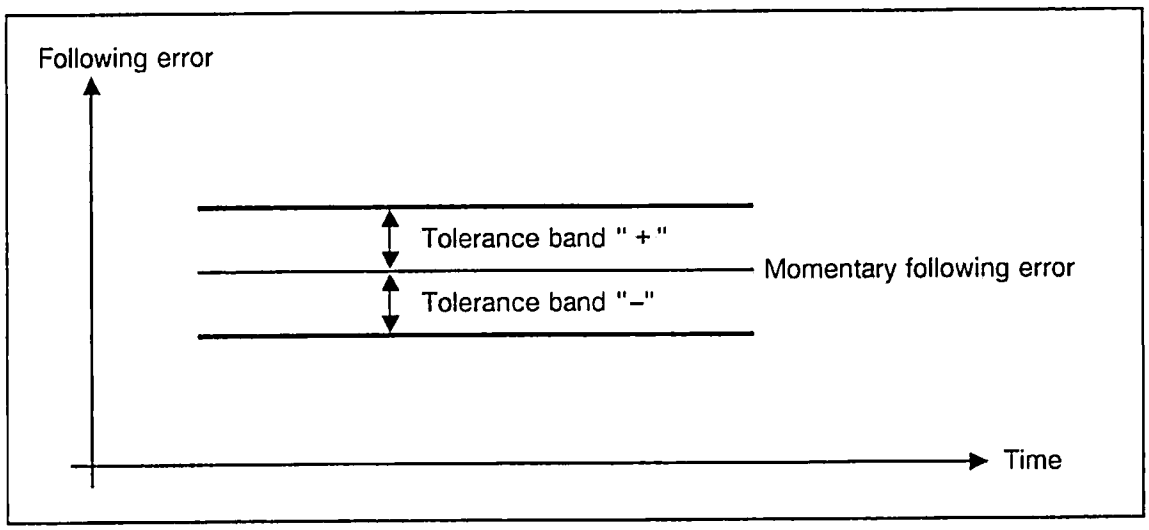

Tolerance band for contour monitoring at constant setpoint speed

© Siemens AG 1990 All Rights Reserved 6ZB5 410-0EN02

The momentary contour deviations for the individual axes can be screened by pressing the "SERVICE DISPLAY" softkey in the diagnostics menu.

Contour monitoring is ineffective if the position setpoint changes. This would mean that there would be no monitoring in the event of circular interpolation. In order to provide machine protection in this case, the signs of the following error, the setpoint position and the actual position are continually compared with one another and a contour alarm (alarm 116*) triggered when they are not identical.

If the monitor responds, the 116* alarms are signalled and the drives decelerated by specifying setpoint "0" at the current limit. In addition, the enable signals for the speed controllers are revoked and the follow-up mode is set. The alarms can be cleared only with "RESET" (M2/M30).

The 116* alarms are signalled as soon as the specified tolerance band is exceeded or when the axis does not assume the new speed within the time defined by the K_V factor when the drives are accelerated or decelerated.

The 116* alarm signals indicate that either the speed control loop has been poorly optimized, the K_V factor is too high for the machine, or the range of the tolerance band is insufficient.

© Siemens AG 1990 All Rights Reserved 6ZB5 410-0EN02

5.2 Drift compensation

Drift compensation is semi-automatic on the SINUMERIK 840, as it must be initiated by the operator. Drift compensation can be performed when the axes (of the CNC) and the drives are operating in closed-loop control mode and the axes are at rest.

Failure of the "OUT OF POSITION < >" indicator to go out after a traversing movement (axis stationary) signals that the maximum permissible value specified in 204* or 208* has been exceeded. Drift compensation is then mandatory.

Operator entries:
Data area

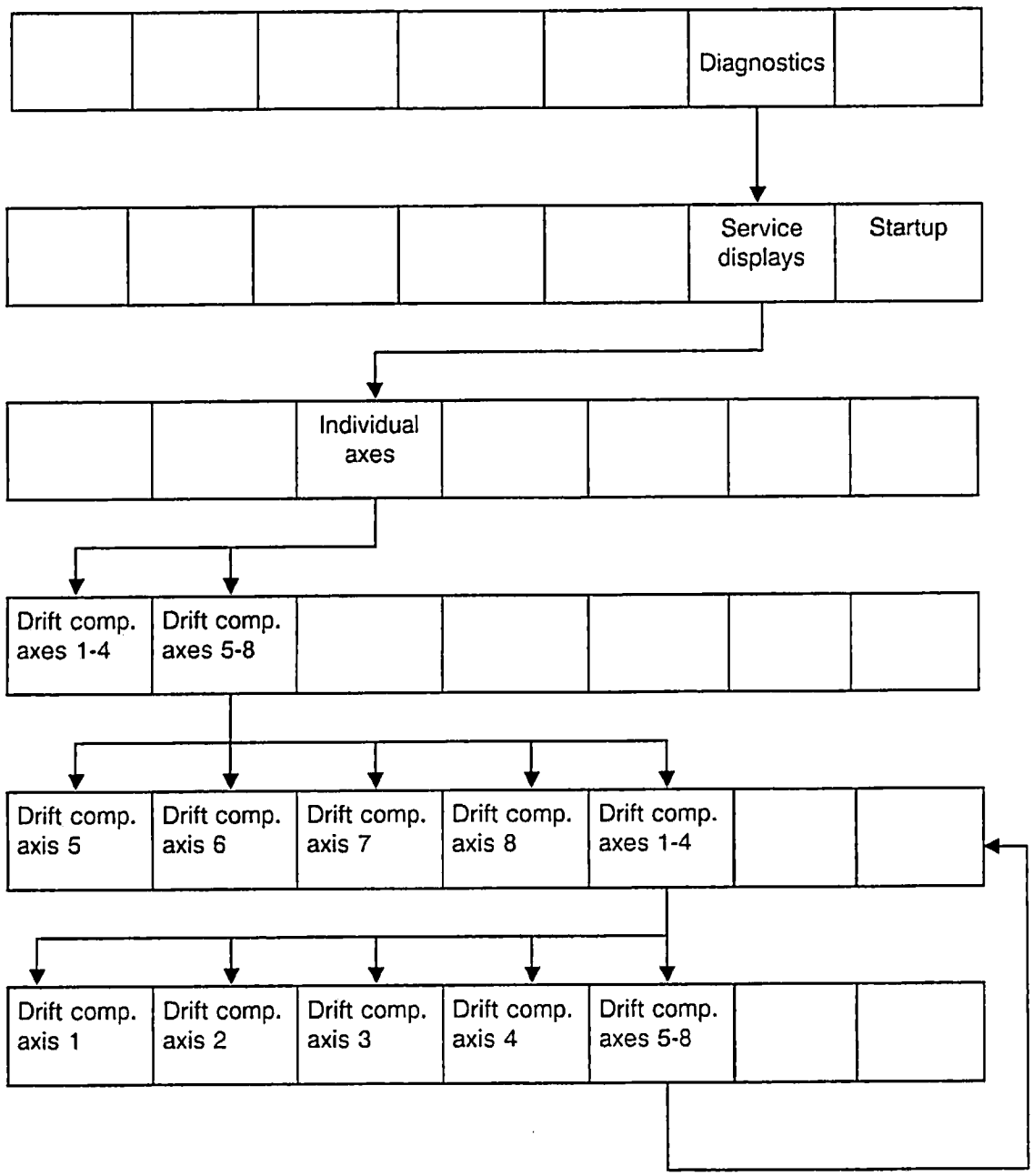

© Siemens AG 1990 All Rights Reserved 6ZB5 410-0EN02

Drift compensation must be carried out separately for each axis.

Drift compensation can also be performed manually by repeatedly modifying the value in MD 272* until the following error at zero speed is zero (check by viewing the service data for the axes).

When very high precision machines are used, drift compensation should be performed several times daily because of the variations in temperature during operation, as the drift is a direct factor in terms of the following error.

© Siemens AG 1990 All Rights Reserved 6ZB5 410-0EN02

5.3 Axis traversing

5.3.1 Traversing in jog mode

Prerequisites

- All axis setpoint cables inserted.
- Control direction correct.
- Position control loops closed.
- All gain values correct.

The following alarms can prevent axis traversing:

Alarm No.	Description
2000	"EMERGENCY STOP"
148*	Software limit switch approached (triggered by MD224*, 228*, 232*, 236*)
152*	Software limit switch approached (triggered by MD224*, 228*, 232*, 236*)
188*	Hardware limit switch approached
192*	Hardware limit switch approached
168*	Interface unit revoked servo enable for traversing axis
156*	Set speed too high. Triggered by NC MD 264*.
112*	Zero-speed monitor Axis is not in position. Triggered by NC MD 372*
116*	Contour monitor (triggered by NC MD 332*, 336*)
132*	Hardware measuring-circuit monitor
136*	Measuring system dirty

The following additional signals (which do not trigger an alarm) are required for traversing in jog mode:

- Feed enable X, Y, Z, 4 - 9
- Feed enable all
- No axis disable X, Y, Z, 4 - 9
- Servo enable X, Y, Z, 4 - 9
- No follow-up control X, Y, Z, 4 - 9
- No parking axis X, Y, Z, 4 - 9

} Interface test

© Siemens AG 1990 All Rights Reserved 6ZB5 410-0EN02

In the absence of feed enable and servo enable signals, an indication showing that the axis is not in position (" > ") is screened when the Direction key is pressed. The following signals must not be present if the axis is to traverse at the specified speed (with consideration given to the feedrate/rapid traverse override switch):

- External F (feedrate from PLC)
- Feedrate reduction ratio 1:100
- Testing of all jog mode functions:
  - Limit switches
  - External deceleration (reduction in rapid traverse rate)
  - Feedrate override
  - Incremental feed mode
  - Reference point approach

5.3.2 Program-controlled traversing

Only the main function should be tested to enable the use of programs as optimization aid.

The following data and signals can prevent program-controlled traversing:

- Read-in inhibited (DL 7 to DR 10)
- NC START = 1 / NC STOP = 0 (DR 2)
- NC START inhibited (DW 11)
- NC MD 106*
- Reference point not approached or bit 3 set in NC MD 5004
- NC MD 548*, 550*, 552*
- NC START ineffective (DL 16)

Check to see if axis traversing is possible via program memory.

© Siemens AG 1990 All Rights Reserved 6ZB5 410-0EN02

5.4 Reference point approach

5.4.1 Corresponding data

- MD 240* (reference point value)
- MD 244* (reference point offset)
- MD 284* (reference point cutoff speed)
- MD 296* (reference point approach speed)
- MD 5008 bit 5 (setting up in jogging mode)
- MD 560* bit 6 (reference point approach with automatic direction recognition)
- MD 564* bit 0 (direction of reference point approach)
- "Ref. point reached" signal (DB 32 DL_K bit 4)
- "Decelerate reference point approach" signal (DB 32 DL_K + 1 bit 4)

Indirectly related:

- MD 5004 bit 3 (NC START without reference point)
- MD 560* bit 4 (no start inhibit for reference point)

The control provides options for two different types of reference point approach, i.e. with and without automatic direction finding. The relevant option is selected via MD 560* bit 6.

5.4.2 Reference point approach without automatic direction-finding

Prerequisites

- MD 560* bit 6 = 0
- Axis-specific feed enable set
- Collective feed enable set
- Reference point between reference point cam and limit switch

© Siemens AG 1990 All Rights Reserved 6ZB5 410-0EN02

1st case: Axis is ahead of the reference point cam

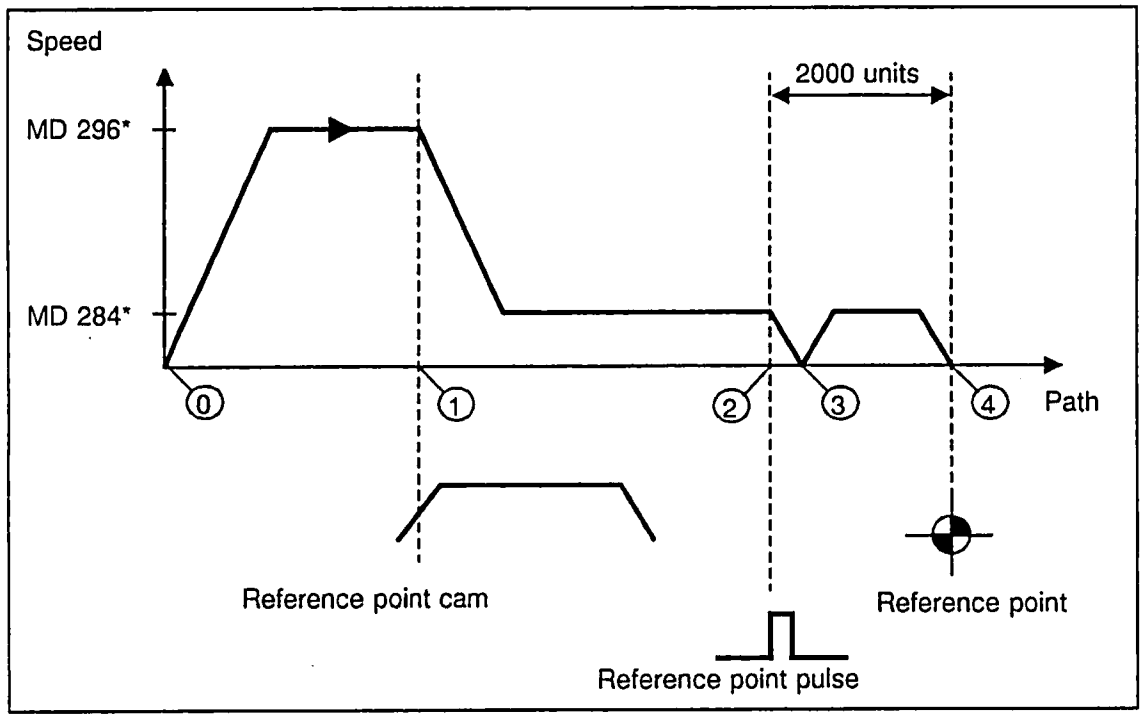

Axis is ahead of reference point cam

⓪ When the direction key is pressed, the reference point for the axis is approached in the specified direction (MD 564* bit 0) at the speed defined in MD 296*.

① When the reference point cam is reached, the "Deceleration" interface signal reduces the axis speed to the value defined in MD 284*.

② After the axis has left the reference point cam, the next reference point pulse is evaluated and the axis decelerated.

③ To prevent backlash on the machine during reference point approach, an additional path of 2000 units is travelled from the reference point pulse to the actual reference point.

Because point ③ is in different places for different speeds, the distance still to be traversed (③ → ④) must be determined before the actual reference point is approached. The axis decelerates down to zero speed.

④ Reference point reached.

Note:

The NC's approach path from (3) to (4) after reaching the zero mark depends on the position control resolution entered in NC MD 5002. If the specified position control resolution is 1/2 - 10^{-3} mm, the NC will travel another 2 mm after reaching the zero mark, whereas it will travel 20 mm if the position control resolution is 1/2 x 10^{-2}. This could be compensated with the aid of NC MD 244* ("Reference point offset") by entering 2000 in NC MD 244* and a position control resolution of 1/2 x 10^{-3}.

During reference point approach, the axis would then travel to (3) and then back to (2).

© Siemens AG 1990 All Rights Reserved 6ZB5 410-0EN02

2nd case: Axis is at the reference point cam

Rather than accelerate to the reference speed, the axis accelerates immediately to the reference point cutoff speed (MD 284*).

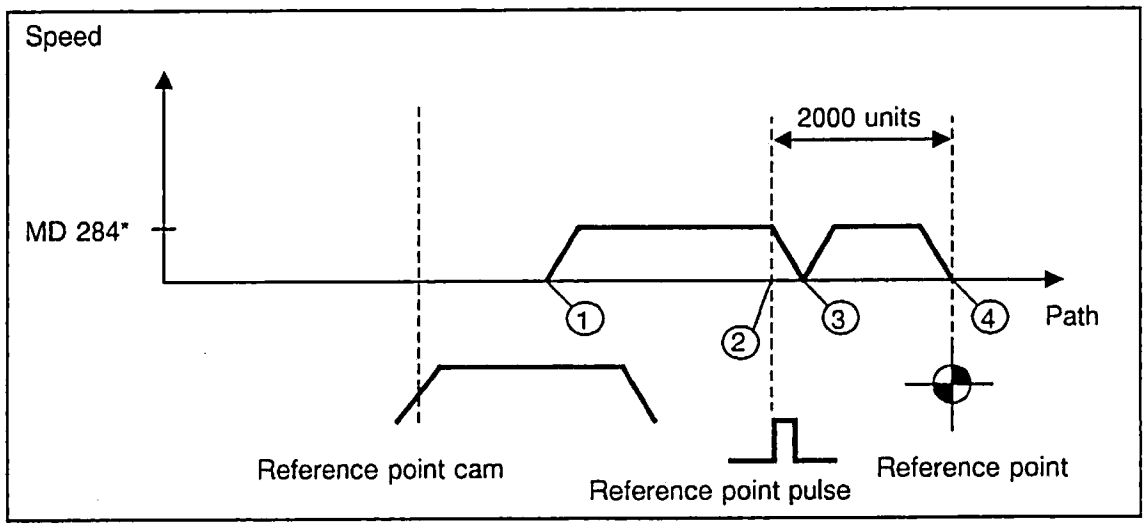

Axis is at reference point cam

3rd case: Axis is behind the reference point cam

Since the signal state of the "Deceleration" signal is the same after the reference point as it was before, the control assumes that the axis is still ahead of the reference point cam and therefore accelerates to the reference approach speed (MD 296*), i.e. the axis travels at high speed toward the limit switch (EMERGENCY STOP), as the software limit switches are not in force prior to or during reference point approach.

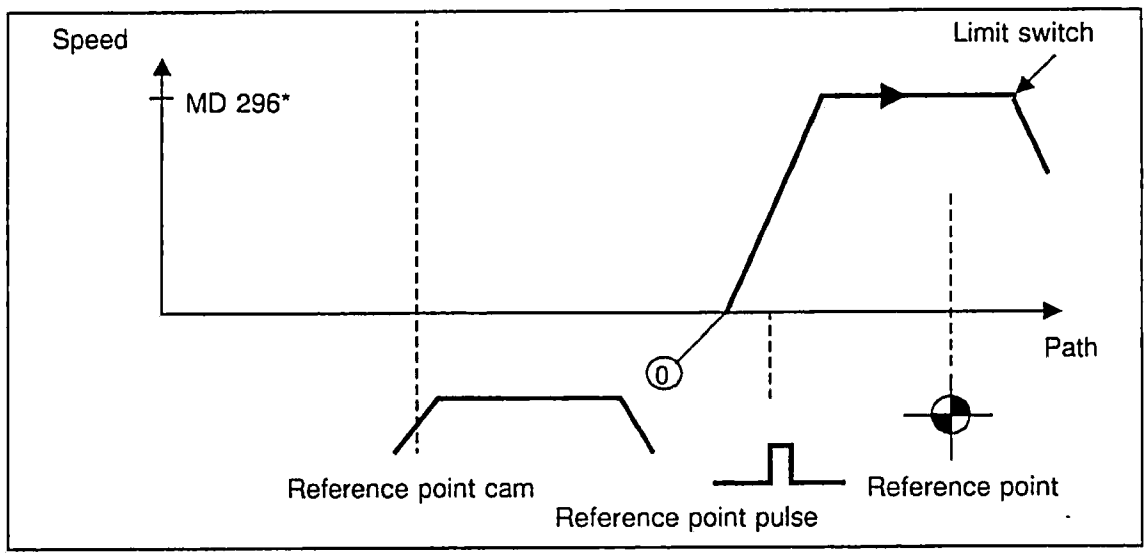

Axis is behind reference point cam

In order to circumvent the problems posed by case 3, it was necessary to integrate a complex system of travel interlocks in the PLC. It was therefore decided that the SINUMERIK System 800 should provide an option which would solve the problem without additional PLC support during reference point approach. This option is referred to as automatic reference point approach, i.e. reference point approach with automatic direction-finding.

© Siemens AG 1990 All Rights Reserved 6ZB5 410-0EN02

5.4.3 Reference point approach with automatic direction-finding

Prerequisites

- MD 560* Bit 6 = 1
- Feed enables set
- Reference point cam extends as far as the traversing limit
- Reference point is ahead of reference point cam

The purpose of automatic direction-finding is to eliminate the problems caused by reference point approach without automatic direction-finding in situations such as those presented in case 3.

1st case: Axis is ahead of the reference point cam

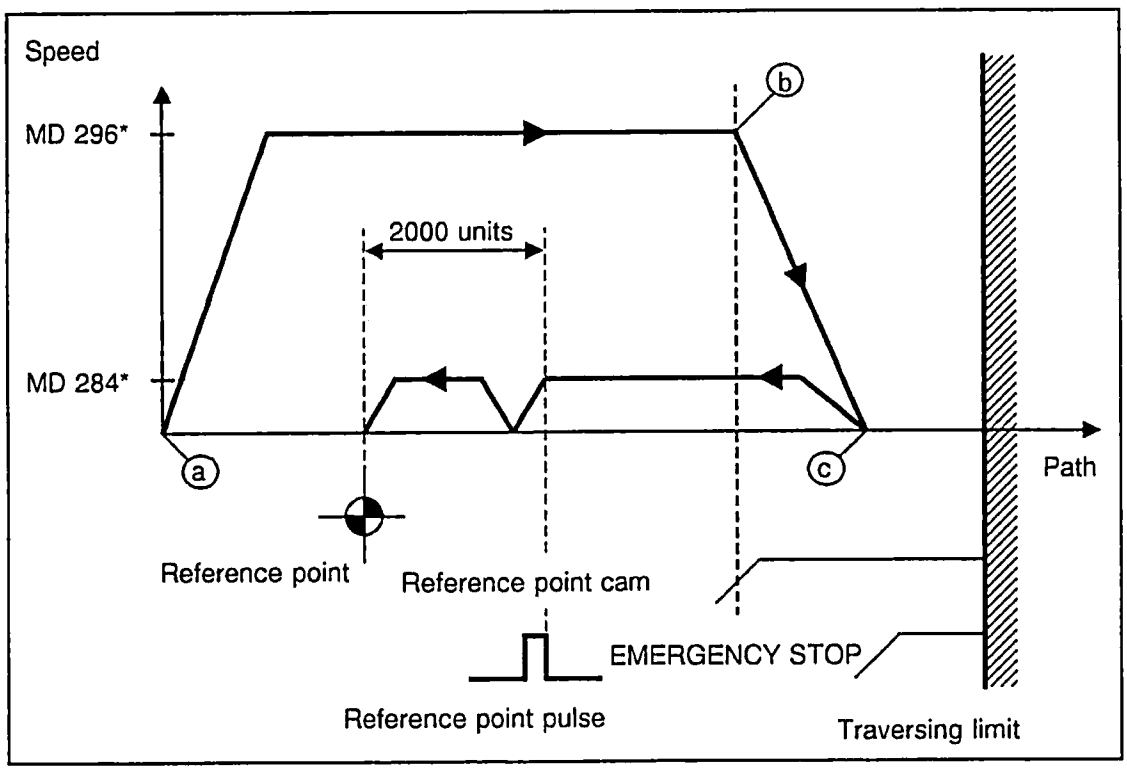

Axis is ahead of reference point cam

ⓐ When the Direction key is pressed, the axis approaches the reference point in the specified direction (MD 564* bit 0) at the speed defined in MC 296*.

ⓑ Upon reaching the reference point cam, the axis is decelerated to zero speed with the "Deceleration" signal.

ⓒ The axis then moves away from the reference point cam at reverse speed (MD 284*) and the next reference pulse is evaluated (refer to Section 5.5.2 for a detailed description of the remaining part of the sequence).

© Siemens AG 1990 All Rights Reserved 6ZB5 410-0EN02

2nd case: Axis is at the reference point cam

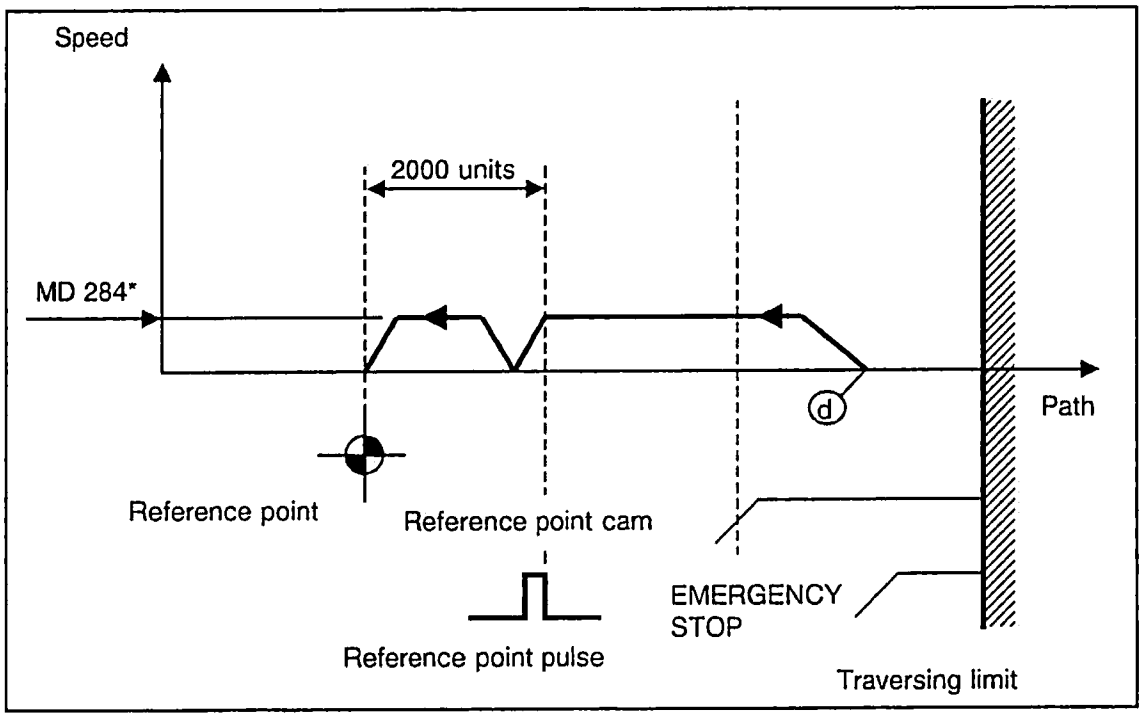

Axis is at reference point cam

ⓓ When the Direction key is pressed, the PLC's "Deceleration" signal enables the NC to establish with absolute accuracy that the axis is already located at the reference point cam. The axis therefore accelerates in the reverse direction (MD 564* bit 0) to the speed defined in MD 284* (refer to Section 5.5.2 for a detailed description of the remaining portion of the sequence).

© Siemens AG 1990 All Rights Reserved 6ZB5 410-0EN02

5.4.4 Program-controlled reference point approach

Programming function G74 can be used for reference point approach in the part program. The procedure is similar to that described in Sections 5.5.2 and 5.5.3.

A movement in the specified direction (MD 564* bit 0) is initiated with G74 in the part program rather than via the direction key.

Example: Automatic or MDA mode N10 G74 X LF

Note:

- Only one axis can be programmed.
- The TRANSMIT or COUPLED MOTION function must not be selected.
- G74 is effective on a block by block basis.
- Tool offset and zero offset PRESET + DRF are suppressed internally by G74, and are again effective when the reference point is reached. The same applies to G functions such as G01, G90, G94, etc.
- The "actual position" is once again updated following initiation of the "Reference point approach" function. The "set/actual difference" is displayed as zero, as the function does not produce difference values which would serve any practical purpose.

© Siemens AG 1990 All Rights Reserved 6ZB5 410-0EN02

5.5 Axis-specific resolutions

5.5.1 Corresponding data

MD 5002	bit 4-7	Input resolution
MD 564*	bit 5	Rotary axis
MD 1800*	bit 0-3	Position control resolution
MD1800*	bit 4-7	Display resolution

Indirectly related:

MD 155	Position controller's sampling interval
MD 160	Ratio of interpolation to position control

5.5.2 General remarks on the axis-specific resolutions

The axes can be matched to the controls via MD.
It must be remembered that only specific combinations are permissible, and care must be taken that the boundaries, maximum axis speed and range limits are not exceeded.

The following types of resolution can be specified for axes:

- Input resolution: Set via MD for all axes
- Geometry resolution: Input resolution x 0.5
- Position control resolution: Set via MD for each axis
- Display resolution: Set via MD for each axis
- Measuring system resolution: Set via MD for each axis

The measuring system resolution is used for adapting the axes to the measuring system (see Section 5.7).

5.5.3 Input, display and position control resolution

Input resolution (Input System - IS)

The input resolution for the entire control is defined in MD 5002, bits 4 to 7. The input resolution defines the geometry resolution for linear and rotary axes. Rotary axes have the same input resolution as linear axes. The geometry resolution determines the interpolation accuracy.

The input resolution defines the units system (inch - metric - degrees).

The input resolution must be taken into account when entering machine data that must be stored in the input system. The default value for linear axes is 10^{-3} and for rotary axes 10^{-3} degrees.

Display resolution

In addition to the input resolution, the user must also define the display resolution. In contrast to the input resolution, the display resolution is defined separately for each axis. NC MD 1800*, bits 4-7, are provided for this purpose. The display resolution defines the number of decimal places that are to be displayed. The default value for all axes is 10^{-3} mm or degrees.

The display resolution must have the same input system (inch - metric - degrees) as the input resolution. Alarm 4 (Power on Alarm) is issued to flag "Illegal input system" if this is not the case.

A display resolution $< 10^{-3}$ degrees is only possible for rotary axes if option E50 is used.

© Siemens AG 1990 All Rights Reserved 6ZB5 410-0EN02

Position control resolution (Measuring System - MS)

Like the display resolution, the position control resolution is defined on an axis-specific basis. This must be taken into account when entering machine data stored in the measuring system. MD 1800*, bits 0-3, are used to define the position control resolution.

The unit system must be the same for each position control resolution.

The unit system (inch - metric - degrees) used for the position control resolution need not necessarily be identical to the one used for the input resolution.

A position control resolution $< 10^{-3}$ degrees is only possible for rotary axes if option E50 is used.

Position control, input and measuring system resolutions

On the SINUMERIK 840, position control resolution and input resolution can be entered separately. In order to obtain a closed position control loop, the pulses arriving from the digital measuring system and the control accuracy must be matched.

The units "unit (MS)" for the position control resolution and "unit (IS)" for input resolution are used as new units of measurement.

The following applies:
1 unit (MS) = 2 units of position control resolution
1 unit (IS) = 1 unit of input resolution

Example:

Assuming a position control resolution of 0.0005 mm and an input resolution of 0.001 mm the following applies:

1 unit (IS) = 1 unit (MS) = 1 µm

© Siemens AG 1990 All Rights Reserved 6ZB5 410-0EN02

5.5.4 Resolution block diagram

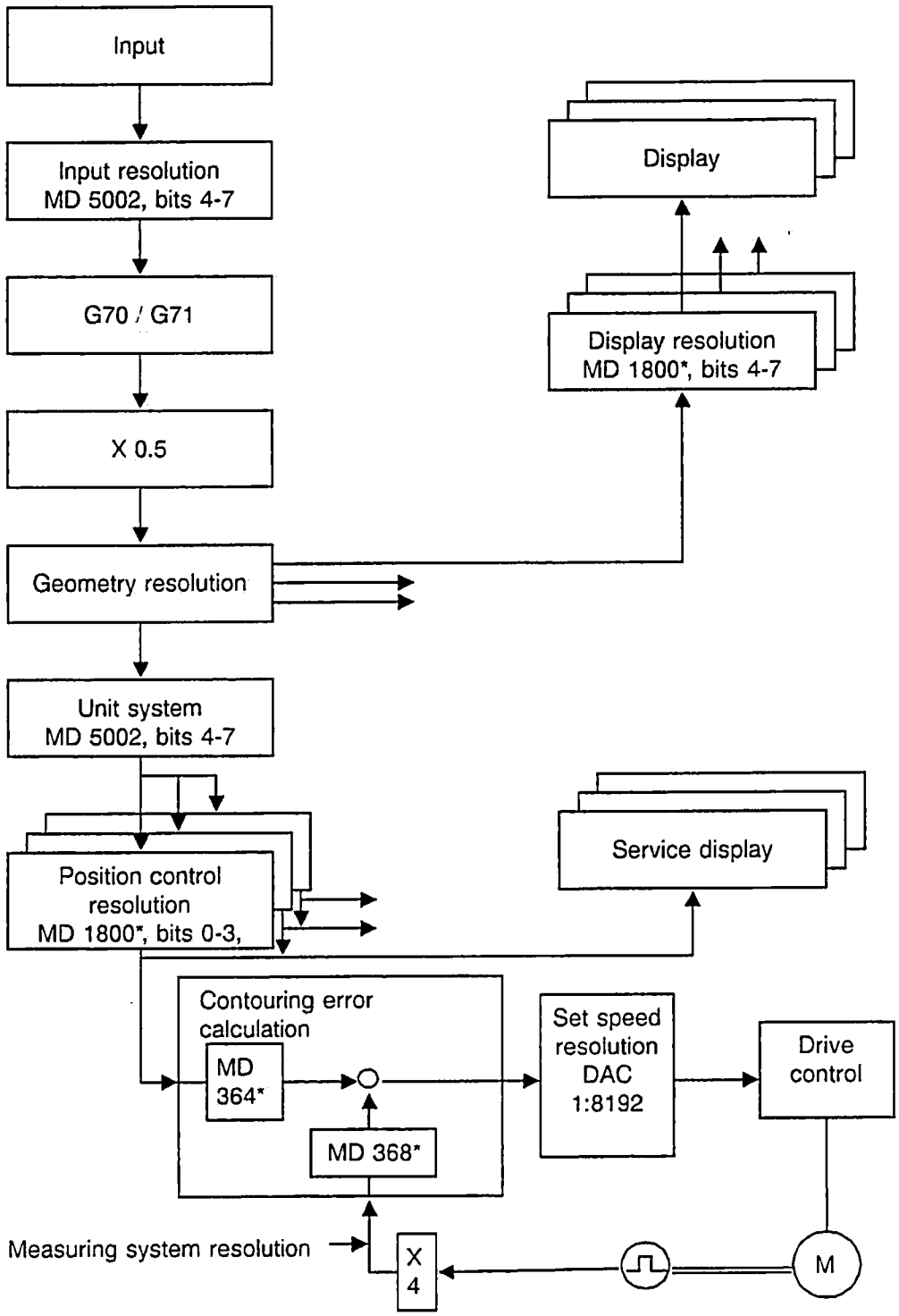

© Siemens AG 1990 All Rights Reserved 6ZB5 410-0EN02

5.5.5 Resolution codes

Table 1 shows the codes for the various types of resolution.
Alarm 4 ("Illegal input system") is issued when illegal values are entered as machine data. Bit 4 (MD 5002) is used as unit system identifier. Metric input system G71 (bit 4 = 0) is the reset state.

Table of resolution codes

Bit 7	Bit 6	Bit 5	Bit 4	Input resolution			NC MD 5002
Bit 7	Bit 6	Bit 5	Bit 4		Display resolution		NC MD 1800*
Bit 3	Bit 2	Bit 1	Bit 0			Pos. contr. resol.	NC MD 1800*
0	0	0	0	———	10^{-1} [mm] [degr.]	0.5 x10^{-1} [degr.]	Metric (degrees)
1	0	0	0	10^{-2} [mm] [degr.]	10^{-2} [mm] [degr.]	0.5 x 10^{-2} [degr.]	
0	1	0	0	10^{-3} [mm] [degr.]	10^{-3} [mm] [degr.]	0.5 x 10^{-3} [degr.]	
1	1	0	0	———	———	2 x 10^{-4} [degr.]	
0	0	1	0	10^{-4} [mm] [degr.]	10^{-4} [mm] [degr.]	0.5 x 10^{-4} [degr.]	
1	0	1	0	10^{-5} [mm] [degr.]	10^{-5} [mm] [degr.]	0.5 x 10^{-5} [degr.]	
0	1	1	0	———	———	———	
1	1	1	0	———	———	———	
0	0	0	1	———	10^{-1} [degr.]	0.5 x 10^{-1} [degr.]	Inch (degrees)
1	0	0	1	———	10^{-2} [degr.]	0.5 x 10^{-2} [degr.]	
0	1	0	1	10^{-3} [inch] [degr.]	10^{-3} [inch] [degr.]	0.5 x 10^{-3} [inch] [degr.]	
1	1	0	1	10^{-4} [inch] [degr.]	10^{-4} [inch] [degr.]	0.5 x 10^{-4} [inch] [degr.]	
0	0	1	1	———	———	2 x 10^{-5} [inch]	
1	0	1	1	10^{-5} [inch] [degr.]	10^{-5} [inch] [degr.]	0.5 x 10^{-5} [inch] [degr.]	
0	1	1	1	10^{-6} [inch] [degr.]	———	———	
1	1	1	1	———	———	———	

0 1 0 0 = standard machine data

© Siemens AG 1990 All Rights Reserved 6ZB5 410-0EN02

5.5.6 Permissible combinations

Valid combinations of position control resolution and input resolution

Unit system	Position control resolution	Input resolution							
		10^{-2} [mm] [degr.]	10^{-3} [mm] [degr.]	10^{-4} [mm] [degr.]	10^{-5} [mm] [degr.]	10^{-3} [inch.] [degr.]	10^{-4} [inch.] [degr.]	10^{-5} [inch.] [degr.]	10^{-6} [inch.] [degr.]
mm	0.5 x 10^{-1} [degr.]	y 1)	y 1)	-	-	-	-	-	-
mm	0.5 x 10^{-2} [mm][degr.]	xy	xy 1)	xy 1)	-	x	x	x	-
mm	0.5 x 10^{-3} [mm][degr.]	xy	xy 2)	xy 1)	-	x	x	x	-
mm	2 x 10^{-4} [mm] 1)	x	x	x	x	-	-	x	x
mm	0.5 x 10^{-4} [mm][degr.] 1)	xy	xy	xy	xy 1)	-	-	x	x
mm	0.5 x 10^{-5} [degr.] 1)	y	y	y	y	-	-	-	-
inch.	0.5 x 10^{-1} [degr.]	-	-	-	-	y 1)	-	-	-
inch.	0.5 x 10^{-2} [degr.]	-	-	-	-	y 1)	y 1)	-	-
inch.	0.5 x 10^{-3} [inch][degr.]	x	x	-	-	xy	xy 1)	x	-
inch.	0.5 x 10^{-4} [inch][degr.]	x	x	-	-	xy	xy	xy 1)	-
inch.	2 x 10^{-5} [inch]	x	x	x	x	x	x	x	x
inch.	0.5 x 10^{-5} [inch][degr.]	x	x	x	x	xy	xy	xy	xy 1)

x ... Linear axes only
y ... Rotary axes only
xy ... Linear and rotary axes
– ... Linear axes and rotary axes not permitted
1) ... Not for endlessly rotating rotary axes (NC MD 572* bit 2 = 0)
2) Standard machine data

Note:
Position control resolution and input resolution should differ as little as possible.

An input resolution of 10^{-2} mm and a position control resolution of 0.5 - 10^{-5} mm, for example, would serve no practical purpose, as one unit of geometry resolution corresponds to 1000 units of position control resolution.

If the input resloution and the position control resolution are in the same unit systems (metric, inch, degree), the display resolution and the position control resolution must be identical (see table above).

If this is not the case, the display resolution must be adjusted according to the table.

The unit systems for display resolution and input resolution must always be the same.

1) Option E50 must be set for rotary axes.

© Siemens AG 1990 All Rights Reserved 6ZB5 410-0EN02

Permissible combinations of position control resolution and display resolution

Unit system	Position control resolution	Display resolution									
		mm					inch.				
		10^{-1}	10^{-2}	10^{-3}	10^{-4}	10^{-5}	10^{-1}	10^{-2}	10^{-3}	10^{-4}	10^{-5}
mm	0.5 x 10^{-1} [degr.]	xy	-	-	-	-	-	-	-	-	-
mm	0.5 x 10^{-2} [mm][degr.]	-	xy	-	-	-	-	-	x	-	-
mm	0.5 x 10^{-3} [mm][degr.]	-	-	xy	-	-	-	-	-	x	-
mm	2 x 10^{-4} [mm][1)]	-	-	xy	xy	-	-	-	-	-	x
mm	0.5 x 10^{-4} [mm][degr.][1)]	-	-	-	xy	-	-	-	-	-	x
mm	0.5 x 10^{-5} [degr.][1)]	-	-	-	-	xy	-	-	-	-	-
inch.	0.5 x 10^{-1} [degr.]	-	-	-	-	-	xy	-	-	-	-
inch.	0.5 x 10^{-2} [degr.]	-	-	-	-	-	-	xy	-	-	-
inch.	0.5 x 10^{-3} [inch][degr.]	-	x	-	-	-	-	-	xy	-	-
inch.	0.5 x 10^{-4} [inch][degr.]	-	x	-	-	-	-	-	-	xy	-
inch.	2 x 10^{-5} [inch]	-	-	x	-	-	-	-	-	xy	xy
inch.	0.5 x 10^{-5} [inch][degr.]	-	-	x	-	-	-	-	-	-	xy

xy ... Permissible for both linear and rotary axes
x ... Permissible for linear axes only
– ... Illegal

5.5.7 The influence of resolution on speed

The input resolution determines not only the path resolution, but also the lowest programmable speed. The lowest programmable speed is always 10 times coarser than the path resolution. For example, if the input resolution is 10^{-4}, the lowest programmable speed is then 10^{-3} mm/min. Depending on the unit system used, the feedrate is interpreted either in mm/min or in inches/min. If one of the interpolating axes is a rotary axis, the corresponding axial feedrate is interpreted as degrees/min.

When rotational feedrate G95 is used, the feedrate is interpreted in either mm/revolution, inches/revolution or degrees/revolution.

When the feedrate is rotational, the lowest programmable speed is identical to the path resolution (for instance, for an input resolution of 10^{-4}, the lowest programmable speed for G95 would be 10^{-4} mm/revolution).

The limiting value based on the position control resolution can be taken from the table above. At no time may the limiting values be exceeded.

---

1) Option E50 must be set for rotary axes.

© Siemens AG 1990 All Rights Reserved 6ZB5 410-0EN02

Max. axis speed for linear axes in m/min or inches/min for a position control resolution of								
Interpolation time in ms	$0.5 * 10^{-2}$ mm	$0.5 * 10^{-3}$ mm	$2 * 10^{-4}$ mm	$0.5 * 10^{-4}$ mm	$0.5 * 10^{-3}$ inch.	$0.5 * 10^{-4}$ inch.	$2 * 10^{-5}$ inch.	$0.5 * 10^{-5}$ inch.
10	980	98	39	9.8	98000	9800	3900	980
12	810	81	32	8.1	81000	8100	3200	810
14	700	70	28	7.0	70000	7000	2800	700
16[1)]	610	61[1)]	24	6.1	61000	6100	2400	610
18	540	54	21	5.4	54000	5400	2100	540
20	490	49	19	4.9	49000	4900	1900	490
22	440	44	17	4.4	44000	4400	1700	440
24	400	40	16	4.0	40000	4000	1600	400
26	370	37	15	3.7	37000	3700	1500	370
28	350	35	14	3.5	35000	3500	1400	350
30	320	32	13	3.2	32000	3200	1300	320

The interpolation time may be in the range from 6 ms to 59.5 ms, and is MD 168* MD 155* MD 160.
The maximum speed can be computed using the following formula:

$$v_{max.} = \frac{\text{Position control resolution x 32764 x 60}}{\text{Interpolation time in ms}}$$

Example for standard values: Interpolation time 16 ms, position control resolution 0.5×10^{-3} mm

$$v_{max.} = \frac{0.5 \times 10^{-3} \times 32764 \times 60}{16 \text{ ms}} = 61 \text{ m/min}$$

1) *Standard value*

© Siemens AG 1990 All Rights Reserved 6ZB5 410-0EN02

Max. axis speed for rotary axes in [degrees/min] or [rev/min] for a position control resolution of					
Interpolation time in ms	0.5 x 10^{-1} degr.	0.5 x 10^{-2} degr.	0.5 x 10^{-3} degr.	0.5 x 10^{-4} degr.	0.5 x 10^{-5} degr.
10	9800000 degr./min 27000 rev/min	980000 degr./min 2700 rev/min	98000 degr./min 270 rev/min	9800 degr./min 27 rev/min	980 degr./min 2.7 rev/min
12	8100000 degr./min 22000 rev/min	810000 degr./min 2200 rev/min	81000 degr./min 220 rev/min	8100 degr./min 22 rev/min	810 degr./min 2.2 rev/min
14	7000000 degr./min 19000 rev/min	700000 degr./min 1900 rev/min	70000 degr./min 190 rev/min	7000 degr./min 19 rev/min	700 degr./min 1.9 rev/min
16	6100000 degr./min 17000 rev/min	610000 degr./min 1700 rev/min	61000 degr./min 170 rev/min	6100 degr./min 17 rev/min	610 degr./min 1.7 rev/min
18	5400000 degr./min 15000 rev/min	540000 degr./min 1500 rev/min	54000 degr./min 150 rev/min	5400 degr./min 15 rev/min	540 degr./min 1.5 rev/min
20	4900000 degr./min 13000 rev/min	490000 degr./min 1300 rev/min	49000 degr./min 130 rev/min	4900 degr./min 13 rev/min	490 degr./min 1.3 rev/min
22	4400000 degr./min 12000 rev/min	440000 degr./min 1200 rev/min	44000 degr./min 120 rev/min	4400 degr./min 12 rev/min	440 degr./min 1.2 rev/min
24	4000000 degr./min 11000 rev/min	400000 degr./min 1100 rev/min	40000 degr./min 110 rev/min	4000 degr./min 11 rev/min	400 degr./min 1.1 rev/min
26	3700000 degr./min 10000 rev/min	370000 degr./min 1000 rev/min	37000 degr./min 100 rev/min	37000 degr./min 10 rev/min	370 degr./min 1 rev/min
28	3500000 degr./min 9500 rev/min	350000 degr./min 950 rev/min	35000 degr./min 95 rev/min	3500 degr./min 9,5 rev/min	350 degr./min 0.95 rev/min
30	3200000 degr./min 9000 rev/min	320000 degr./min 900 rev/min	32000 degr./min 90 rev/min	3200 degr./min 9 rev/min	320 degr./min 0.9 rev/min

The interpolator breaks the tool path down into the associated axis-specific speed components. These values are then converted into position control resolution.

Conversion is possible, however, only when the relevant maximum speeds (table) and their correlation to interpolation are observed during programming. Alarm 2038, i.e. "Path feed too high" (Reset alarm) is issued if the speed is not possible. The alarm inhibits processing and NC start.

In order to enable programming of high feedrate values in mm/min, a maximum of 999 999 mm/min can be programmed in the part program. Nine decades (including decimal places) are provided for this purpose.

Setting data item "Dry run feedrate" is still entered in 1000 IS units/min. As many as 5 digits can be displayed and entered via keyboard. (For example, input resolution 10^{-4} mm → maximum dry run feedrate 9.999 m/min).

Alarm 3040 ("Field/variable cannot be displayed") is issued if more than 5 digits are programmed via the CL 800 command "SEN" or the @410 command.

© Siemens AG 1990 All Rights Reserved 6ZB5 410-0EN02

5.5.8 Limiting values for thread cutting

In the case of threading blocks G33, G34 and G35, the feedrate is computed from the spindle speed and the pitch rather than being based on the programmed (linear) feedrate. This feedrate determines the tool path feedrate for the threading block.

Constant and variable pitch thread cutting

For this type of threading, the tool path feedrate may not exceed the following limiting values.

Max. path/axis speed (v) for a position control resolution [v in m/min] or [v in inch/min]								
Inter-polation time [ms]	10^{-2} mm	10^{-3} mm	10^{-4} mm	10^{-5} mm	10^{-3} inch	10^{-4} inch	10^{-5} inch	10^{-6} inch
10	980	98	9.8	0.98	98000	9800	980	98
12	810	81	8.1	0.81	81000	8100	810	81
14	700	70	7.0	0.70	70000	7000	700	70
16[1)]	610	61	6.1	0.61	61000	6100	610	61
18	540	54	5.4	0.54	54000	5400	540	54
20	490	49	4.9	0.49	49000	4900	490	49
22	440	44	4.4	0.44	44000	4400	440	44
24	400	40	4.0	0.40	40000	4000	400	40
26	370	37	3.7	0.37	37000	3700	370	37
28	350	35	3.5	0.35	35000	3500	350	35
30	320	32	3.2	0.32	32000	3200	320	32

If these values are exceeded, the speed is kept to its maximum value and the alarm 2037 "Programmed S value to high" is displayed.

© Siemens AG 1990 All Rights Reserved 6ZB5 410-0EN02

5.5.9 Range Limits

The input resolution determines the range limits for the position information. Position information includes such values as interpolation parameters, chamfer, and radius:

The range limits based on the input resolution are shown in the table below. The table data is interpreted as follows: When the input resolution is e.g. 0.0001 mm, all position information must be less than or equal to 99 999.999 mm. If the entry is in inch system units, it may not exceed 3 937.007 8 inches.

Table of limiting values for position information (range limits based on input resolution)

Input resolution		Position information Input unit system (G71)			Position information Input unit system (G70)		
0.01	mm	+/-	999 999.99	mm	+/-	3 937.007	inch
0.001	mm	+/-	99 999.999	mm	+/-	3 937.007 8	inch
0.000 1	mm	+/-	99 999.999	mm	+/-	3 937.007 8	inch
0.000 01	mm	+/-	9 999.999 9	mm	+/-	393.700 78	inch
0.001	inch	+/-	253 999.99	mm	+/-	9 999.999	inch
0.000 1	inch	+/-	253 999.99	mm	+/-	9 999.999 9	inch
0.000 01	inch	+/-	107 374.18	mm	+/-	9 999.999 9	inch
0.000 001	inch	+/-	10 737.418	mm	+/-	999.999 99	inch
0.01	degr.	+/-	999 999.99	degr.			
0.001	degr.	+/-	999 999.99	degr.			
0.000 1	degr.	+/-	99 999.999	degr.			
0.000 01	degr.	+/-	9 999.999 9	degr.			
0.000 001	degr.	+/-	999.999 99	degr.			

In addition to the input resolution, the axis-specific position control resolution also determines the maximum permissible traversing range. Refer to the table entitled "Traversing Ranges".

© Siemens AG 1990 All Rights Reserved 6ZB5 410-0EN02

The residual path (set/actual difference, distance to go) is represented internally in the input resolution. The limiting values are shown in the table below. Alarm 2061 ("General programming error") is issued if these values are not observed during programming, i.e. if the programmed block length exceeds the distance to go.

Table of limiting values for the distance to go

Input resolution		Distance to go Input unit system (G71)			Distance to go Input unit system (G70)		
0.01	mm	+/-	10 737 418	mm	+/-	422 732	inch
0.001	mm	+/-	1 073 741	mm	+/-	42 273	inch
0.000 1	mm	+/-	107 374	mm	+/-	4 227	inch
0.000 01	mm	+/-	10 737	mm	+/-	422	inch
0.001	inch	+/-	27 273 021	mm	+/-	1 073 741	inch
0.000 1	inch	+/-	2 727 299	mm	+/-	107 374	inch
0.000 01	inch	+/-	272 719	mm	+/-	10 737	inch
0.000 001	inch	+/-	27 254	mm	+/-	1 073	inch
0.01	degr.	+/-	10 737 400	degr.			
0.001	degr.	+/-	1 073 740	degr.			
0.000 1	degr.	+/-	107 374	degr.			
0.000 01	degr.	+/-	10 737	degr.			
0.000 001	degr.	+/-	1 073	degr.			

The values defined as working area limitation (setting data 300*, 304*) must lie within the area boundaries. Alarm 3084 ("Invalid working area limitation") is issued if one of these values is not in range. In addition, the control enters the highest or lowest permissible value in SD "working area limitation".

In addition to the working area limitation, the software limit switches (MD 224*, 228*, 232*, 236*) and the pre-limit switches (MD 1100*) are also checked for validity. Alarm 87 ("Invalid software limit switch") is issued if impermissible values are detected. The validity check is carried out without regard to MD 560* bit 5 ("Working area limitation, software limit switches in force").

In order to prevent the working area from being exceeded, the absolute position is compared with the limiting values. This comparison is necessary only when the software limit switches/working area limitation are not active, as exiting of the traversing range is otherwise impossible. This check is not carried out for rotary axes.

© Siemens AG 1990 All Rights Reserved 6ZB5 410-0EN02

Alarm 1204* ("Traversing limit") (Reset alarm) is issued when a limit violation is detected. The alarm is issued for limit violations in both directions of travel. The same reaction is initiated when the working field bounds are violated, i.e. withdrawal is possible in the reverse direction only. The alarm is not issued until the traversing limit is exceeded. The relevant axes are then abruptly braked (no deceleration ramp).

In the case of endless revolving rotary axes, the traversing range can be legally exceeded when a permissible combination of input resolution and position control resolution was defined. Impermissible combinations of input resolution and position control resolution will result in a malfunction (when the traversing limit is exceeded).

Table of limiting values for traversing ranges (based on position control resolution)

Position control resolution		Traversing range		
0.005	mm	+/-	99 9999.99	mm
0.000 5	mm	+/-	99 999.999	mm
0.000 2	mm	+/-	9 999.999 9	mm
0.000 05	mm	+/-	9 999.999 9	mm
0.000 5	inch	+/-	9 999.999	inch
0.000 05	inch	+/-	9 999.999 9	inch
0.000 02	inch	+/-	999.999 9	inch[1)]
0.000 005	inch	+/-	999.999 99	inch[1)]
0.05	degr.	+/-	999 999.99	degr.
0.005	degr.	+/-	99 999.99	degr.
0.000 5	degr.	+/-	99 999.999	degr.
0.000 05	degr.	+/-	9999.999 9	degr.
0.000 005	degr.	+/-	999.999 99	degr.

1) For an input resolution of 10^{-5} mm, the traversing range is 422 inches.

© Siemens AG 1990 All Rights Reserved 6ZB5 410-0EN02

5.5.10 Influence on the display

Operator display

The axis position is displayed with the relevant, axis-specific number of decimal places. No distinction is made between linear and rotary axes when defining the number of decimal places.

The values for zero offset, working area limitation and scale are displayed in the input resolution. If this is not possible, decimal places are truncated in order to enable the display of the entire integer portion of the value.

Rotary axis values can be displayed as absolute or modulo values (depending on NC MD bit).

If the absolute position is displayed for a rotary axis, it is possible to show only a finite number of revolutions. The possible number of revolutions depends on the specified display resolution. If the maximum absolute position is exceeded, alarm 3040 ("Field/variable cannot be displayed") is issued.

Maximum number of resolutions with absolute display

Display resolution	Maximum absolute position		Maximum possible no. of revolutions (is not displayed)	
10^{-1} degr.	9999999.9	degr.	27777.7	rev
10^{-2} degr.	999999.99	degr.	2777.7	rev
10^{-3} degr.	99999.999	degr.	277.7	rev
10^{-4} degr.	9999.9999	degr.	27.7	rev
10^{-5} degr.	999.99999	degr.	2.7	rev

If the axis position for a rotary axis is displayed modulo 360 degrees (NC MD 560* bit 7 = 1), there is no limiting value for the display.

© Siemens AG 1990 All Rights Reserved 6ZB5 410-0EN02

Service display

The service display shows the absolute position in units of position control resolution (units MS). When viewing this display, it must be noted that the significance of the last decade depends on the axis-specific position control resolution.

The service values can be displayed as absolutes only. In the case of rotary axes, the maximum possible number of revolutions can be taken from the table. If this number is exceeded, the numerical value jumps from the maximum positive to the maximum negative number. If modulo representation was selected in the operator display, the numerical value changes from the maximum positive number to the maximum negative number plus offset.

Number of revolutions in the service display

Display resolution	Maximum absolute position		Maximum possible number of revolutions (no display)
10^{-1} degr.	107374182.4	degr.	298261.61 rev.
10^{-2} degr.	10737418.24	degr.	29826.16 rev.
10^{-3} degr.	1073741.824	degr.	2982.61 rev.
10^{-4} degr.	107374.182	degr.	298.26 rev.
10^{-5} degr.	10737.418	degr.	29.82 rev.

© Siemens AG 1990 All Rights Reserved 6ZB5 410-0EN02

5.5.11 Influence on the modes/function

"Increment" mode

In "increment" mode, the machine travels at the specified incremental speed. The feedrate is specified via machine data. The increment is derived from the mode (INC 1, 10, 100, 1000, 10000) and from the display resolution of the relevant axis.

The table below shows the traverse path in mm, inches or degrees in dependence on the display resolution and the mode.

Display res. / Increment	Millimeters / Degrees / Inches				
	10^{-1} [degr.]	10^{-2} [mm] [degr.]	10^{-3} [mm] [degr.] [inch]	10^{-4} [mm] [degr.] [inch]	10^{-5} [degr.] [inch]
INC 1	0.1	0.01	0.001	0.0001	0.00001
INC 10	1	0.1	0.01	0.001	0.0001
INC 100	10	1	0.1	0.01	0.001
INC 1000	100	10	1	0.1	0.01
INC 10000	1000	100	10	1	0.1

"DRF" function

In "DRF" mode, the handwheel pulses are also weighted with the display resolution of the selected axis.

"Preset" function

The "Preset" mode can be used to shift control zero to an arbitrary point in the machine coordinate system. The Preset offset may comprise no more than 8 decades (plus sign). An alarm is issued if more than 8 decades are entered.

The following value ranges must be observed when specifying a Preset value for rotary axes.

Input resolution	Value range
10^{-2} degr.	0 ... 359.99
10^{-3} degr.	0 ... 359.999
10^{-4} degr.	0 ... 359.9999
10^{-5} degr.	0 ... 359.99999
10^{-6} degr.	0 ... 359.999999

© Siemens AG 1990 All Rights Reserved 6ZB5 410-0EN02

"Play back" function

In this mode, position values approached in jog mode are taken over into the part program. The input resolution determines the number of decimal places with which the coordinate values are transferred to the part program. The number of decimal places is identical for all axes, and is independent of the display or position control resolution. As many as 8 decades can be transferred as position value to the part program. Where applicable, decimal places are not transferred to the part program.

© Siemens AG 1990 All Rights Reserved 6ZB5 410-0EN02

5.6 Determining sampling interval and interpolation time

5.6.1 Corresponding data

MD155	NC MD Position controller basic clock frequency
MD160	Interpolation to position control ratio
MD168	Drive basic cycle time
MD1396*/MD466*	Position control clock frequency increase axis/spindle

5.6.2 Functional description

MD 155 and MD 168 are used to set the position control basic clock frequency, and MD 160 to set the ratio of the interpolation time to the sampling interval. The objective is to keep both these times to a minimum.

In order to off-load the CPU as much as possible, axes that are not used for workpiece machining (auxiliary axes, loader axes) can be controlled at longer intervals. MD 1396* is used to increase the sampling interval.

The sampling interval is the interval at which the control forwards a new setpoint to the axes and computes the actual value.

MD466* is valid for the spindle rather than MD1396*.

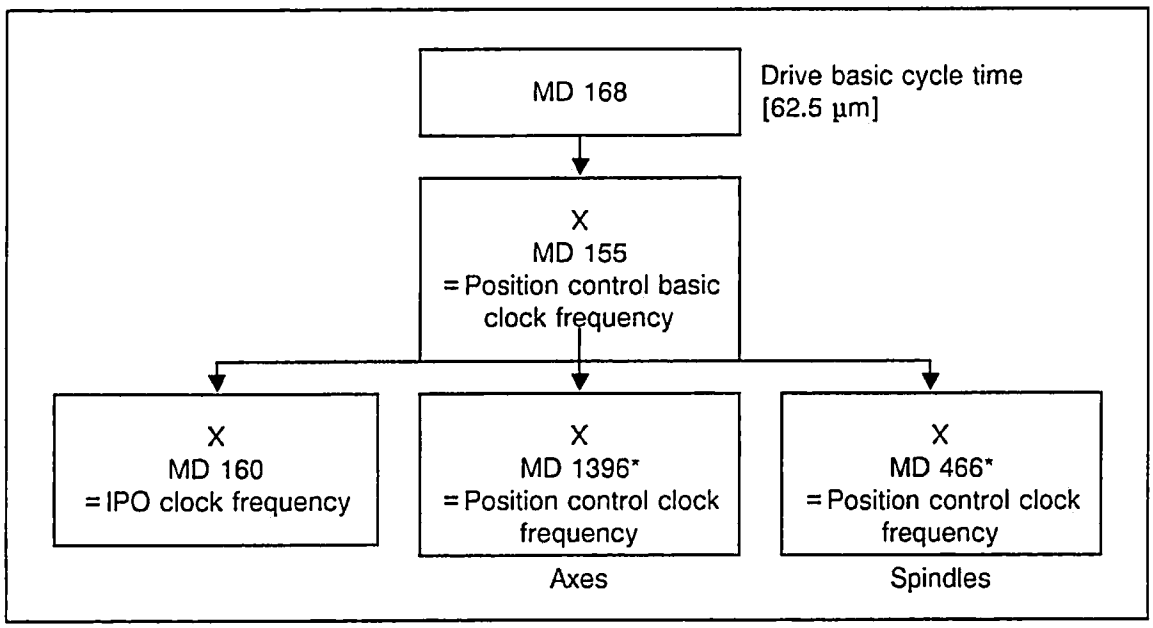

Determination of sampling interval and interpolation time

© Siemens AG 1990 All Rights Reserved 6ZB5 410-0EN02

5.6.3 Setting

- Enter drive basic cycle time in MD 168 (in 62.5 µm).
- Enter position control basic clock frequency in MD 155 (multiplier MD 168).
- Enter ratio to interpolation time in MD160.
- Make sure that the ratio between interpolation time and sampling interval of the auxiliary axis is an integer value.
- Alarm 1012*, "Servo parameter assignment error" is issued to flag an invalid MD parameter value.
- Set increase of position control basic clock frequency for each axis in MD 1396*

5.6.4 Example for setting the sampling interval

Available: 2 machining axes (X, Z)
2 auxiliary axes (Q1, Q2)

Desired sampling interval for machining axis	2 ms
Desired interpolation time	16 ms

Possible sampling intervals for auxiliary axis:

4 ms, 8 ms, 16 ms. The selected interval is 8 ms.

MD values:

MD 168	= 8 (0.5 ms)
MD 155	= 4 (2 ms)
MD 160	= 8 (16 ms)
MD 1396*	= 4 (8 ms)
MD 5842 Bit 0	= 1
MD 5843 Bit 0	= 1

© Siemens AG 1990 All Rights Reserved 6ZB5 410-0EN02

6 Spindle Installation

6.1 Corresponding data

- MD 131 - 146 (Spindle override)
- MD 4000 - 4533 (Spindle data)
- "Analog spindle speed" option (only with SINUMERIK 840M)
- MD 5200 bits 0 - 7
- MD 524* bits 0 - 31
- MD 5210 bits 1 and 7
- Interface DB31 (Spindle DB)
- Interface DB10 - 13 (Channel DB)

6.2 S analog (M3, M4, M5)

Basic information on spindle installation is presented in Section 4, and has therefore been omitted here.

On the SINUMERIK 840, output of the analog spindle speed is fully implemented in the NC, so that influencing from the PLC is possible only by means of special signals (refer to the Interface Description, Part 1). Spindle data for up to 8 gears and additional monitoring functions are stored in the control.

The "Automatic gear selection" function is also implemented in the NC. The NC executes this function by generating the "Gear change" interface signal in dependence on the programmed S value; the "Set gear" defined in the machine data is then made available at the interface. The PLC subsequently outputs the "Spindle disable" signal.

The spindle motor decelerates to zero speed. The PLC must output the "PLC spindle control" and "Oscillation speed" signals and reset the "Spindle disable" signal. The PLC reverses the direction of rotation in order to facilitate gear meshing.

When the gear has engaged, the PLC must issue the interface signals "Gear change", "PLC spindle control", "Reset oscillation speed", "Set spindle disable", and the new "ACT gear", to the spindle. Once the PLC has enabled the spindle (reset spindle disable signal), the spindle accelerates to the new speed.

Interface signals: DB 31, spindle-specific signals

Note:

Automatic gear selection is possible with the S analog function only.

The maximum 8 gears are precisely defined by means of the minimum and maximum speeds of the individual gears.

---

1) as from Software Version 2.1

© Siemens AG 1990 All Rights Reserved 6ZB5 410-0EN02

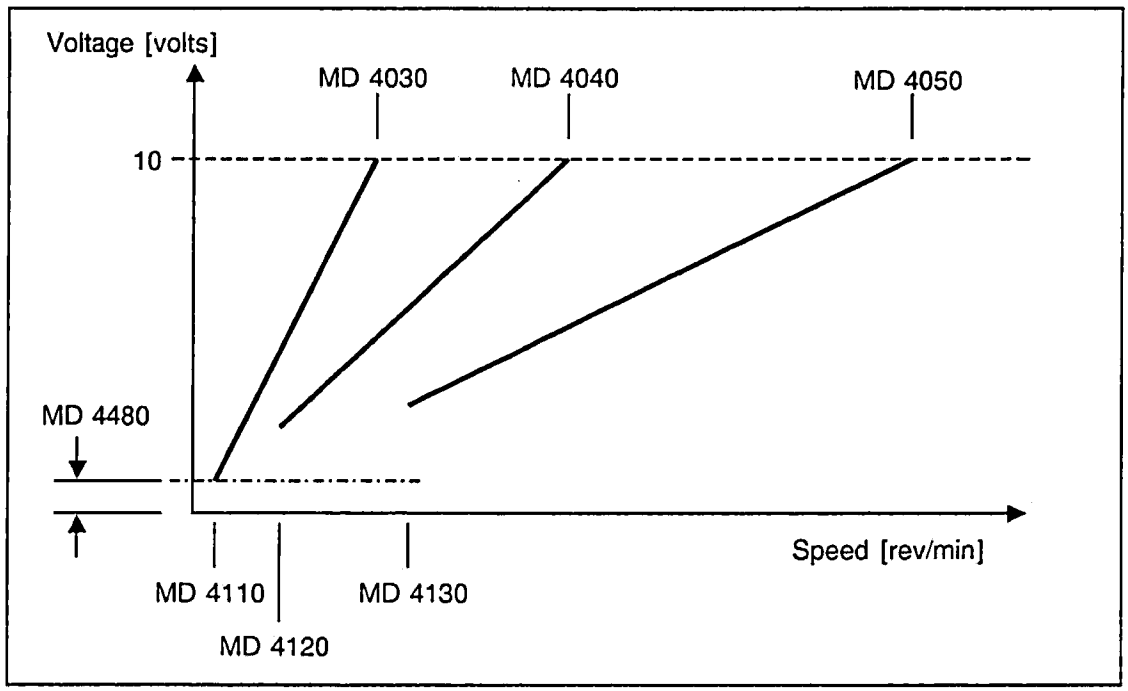

The gear is output on the basis of the lowest switching frequency, i.e. if the speeds of the individual gears overlap, a new gear is output only when the programmed S value is no longer possible for the selected gear.

In view of the fact that not all spindle drives are equipped with ramp-function generators, such a generator was integrated in the 840 for each spindle drive (4 ms unit). The following enable signals are required for spindle setpoint output:

DB 31 Spindle-specific signals

- DL_K+1 bit 6 = 1 "Servo enable"
- DL_K+1 bit 5 = 0 "Default setpoint is 0"
- DW_K+3 all bits = 0 "Spindle disable"
- Setting data "Spindle speed limitation"

6.3 M19 (Oriented spindle stop)

The oriented spindle stop function (M19 S...LF) is intended to prevent additional external hardware expense if the spindle is to be stopped at a specific position for a tool change or to engage a gear.

The M19 function distinguishes between

- NC controlled spindle positioning
- PLC controlled spindle positioning

Simultaneous use of both subfunctions is not possible, and would result in an NC malfunction. In this case, the ROD encoder (1024 or 512 pulses per revolution) is used not only for speed control (G95) and thread cutting (G33), but also as a position encoder, the zero mark serving as position reference point (corresponding to 0 degrees).

© Siemens AG 1990 All Rights Reserved 6ZB5 410-0EN02

With S analog (M3, M4, M5), the spindle is controlled by the NC; only with M19 is the position control loop closed by the NC. The pulses from the ROD encoder act as actual position values. Since a ROD encoder with 1024 or 512 pulses per revolution is required as actual value system, a resolution of 360 degrees / 4096 (approx. 1/11 degrees) can be achieved via quadrupling at the hardware level (only 2/11 degrees in the case of a 512 pulse ROD encoder).

The oriented spindle stop function is invoked in the part program. The target position is stored as setting data which can be entered manually or specified in whole degrees by programming "M19 S..".

The positioning range is 0.1 to 359.9 degrees. Positioning is carried out in the specified direction of rotation (M3, M4) or from the at rest state over the shortest path of travel.

In the case of the **NC internal** approach, there are two sequences **(sequence A or sequence B)** on the basis of which the oriented spindle stop is integrated into the block sequence of the NC program.

Sequence A:

In **sequence A**, the spindle stop is handled in a special part program block, and a block change does not take place until the function has terminated; axis movements and spindle positioning cannot take place at the same time.

Sequence B:

In **sequence B**, M19 is modal, even over a number of blocks. While the spindle is being positioned or held in position, it is possible to move the axes, continue program execution, or even initiate a tool change (NC MD 520*, bit 5).

The following applies to both sequences:

- M19 S.. must be programmed in a separate block without axis movements.
- Orientation takes place in the specified direction of rotation (M03/M04).
- M19 is possible at zero speed (shortest travel path).
- The oriented spindle stop is initiated at the beginning of the block.
- M19 is aborted or terminated by
  - EMERGENCY STOP (alarm 2000)
  - Reset (machine data–dependent)
  - End–of–program (M02/M30) (machine data–dependent)
  - Spindle disable signal (DB 31 DW K + 3)
  - Fault in a spindle or axis measuring circuit
  - Errors which result in a shutdown of all axes
  - Cancellation of NC Ready 2
  - Acknowledge M19 + PLC spindle control signals (DB 31 DW K +2)
- In "MDI AUTO", "Jog" or "AUTOMATIC" mode. M19 can also be selected by "overstoring".
- M19 is output to the PLC interface as auxiliary function.

Special features of sequence A (NC MD 520*, bit 5 = 0)

- A block change does not ensue until the M19 function has terminated (acknowledge M19).
- Simultaneous traversing of the axes is not possible.

© Siemens AG 1990 All Rights Reserved 6ZB5 410-0EN02

Special features of sequence B (NC MD 520*, bit 5 = 1)

- M19 is modal, even over a number of blocks.
- Block change takes place following a delay of one PLC cycle.
- In subsequent blocks, axes can be moved or a tool changed while positioning or position control is in progress.
- The direction of rotation (M03/M04) may not be reversed while positioning is in progress (M19), as otherwise positioning takes place from an indeterminate direction.
- The operating mode can be switched to Jog, Incremental or Repositioning while M19 is in progress; the position control loop remains closed, and the axes can be traversed.
- If the PLC detects auxiliary function M19, it can prevent a block change by revoking the READ-IN ENABLE signal.
- If M19 is reinvoked before a preceding M19 run was terminated via the "Acknowledge M19" signal, control is adjusted to the new spindle position and the NC approaches the new position over the shortest distance, without regard to the specified direction of rotation; the spindle travel is less than 180 degrees, irrespective of the control characteristic.

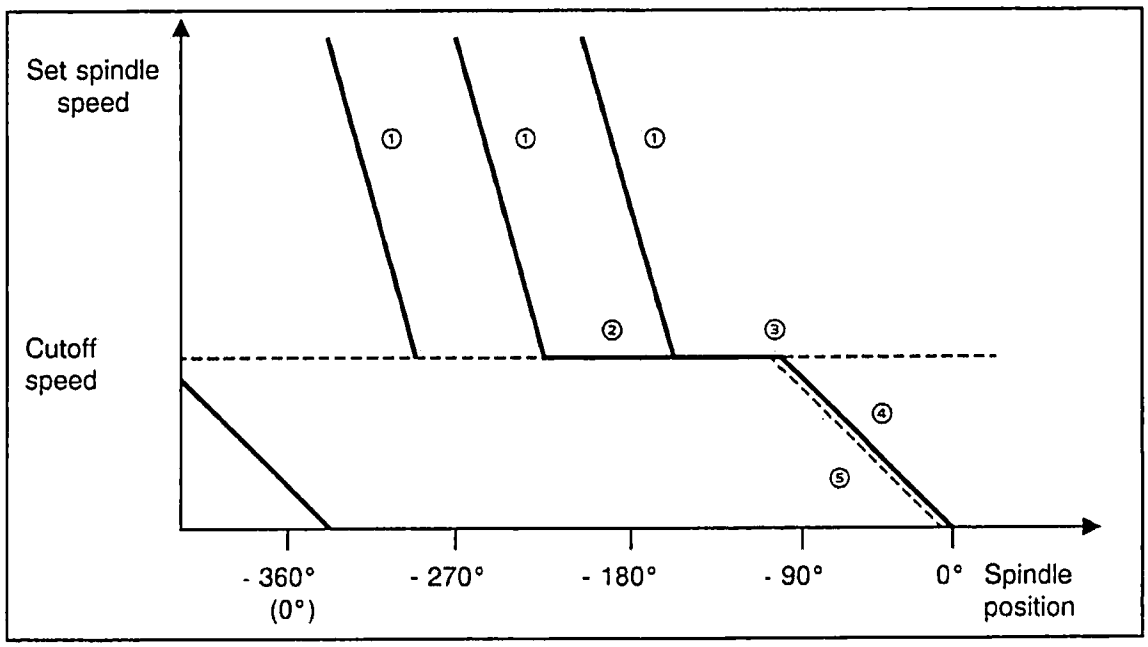

- Decelerating the spindle from the programmed speed to the cutoff speed over the ramp-up characteristic ① specified via the acceleration time constant.
- Continuing in the same direction of rotation at cutoff speed ②.
- Intersection of gain characteristic ⑤ and cutoff speed (3). It is at this point that the position controller for the spindle is activated and the programmed spindle position approached along the gain characteristic ④.
- Output of the "Spindle position reached" message (DB 31 DLK bit 4) to the PLC when the current spindle position falls short of the tolerance limit specified in MD 4430. The control, however, continues to try to approach the programmed position with greater accuracy than the drift and the steepness of the gain characteristic allow.
- M19 is regarded as having terminated when the PLC generates the "Acknowledge M19" signal (DB 31 DRK +2, bit 2). In this case, the closed position control loop is opened but the spindle servo enable relay does not drop out (spindle can drift off).

© Siemens AG 1990 All Rights Reserved 6ZB5 410-0EN02

If the gain selected is so minimal that the intersection of gain characteristic and cutoff speed is more than 180 degrees from the setpoint position, the approach is continued to within 180 degrees of the setpoint position at cutoff speed (once that speed has been reached); this is then followed by a jump to the approach curve ⑥.

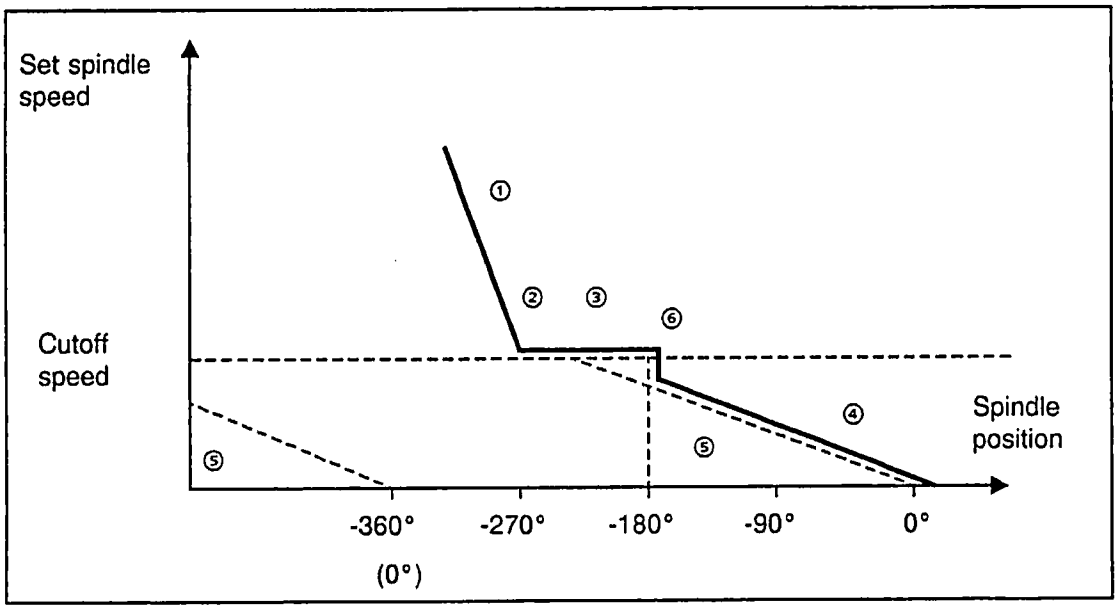

Effects of cutoff speed and gain factor on the control response:

The following applies for all curves:

- Programmed speed M4 S400 LF
- Ramp-up time = 0
- Spindle position M19 S0 LF
- 1 cm = 2 V, 1 cm = 100 ms

The curves cannot be identical to those shown in the diagram above, as they represent speed on a time-dependent basis. In addition, the inertia of the spindle plays a substantial role in the chronological sequence, as does the backlash in the gearing. For these reasons, the diagrams are able to show only the basic interrelation between cutoff speed and gain factor.

© Siemens AG 1990 All Rights Reserved 6ZB5 410-0EN02

Cutoff speed: S100
Gain factor: 700

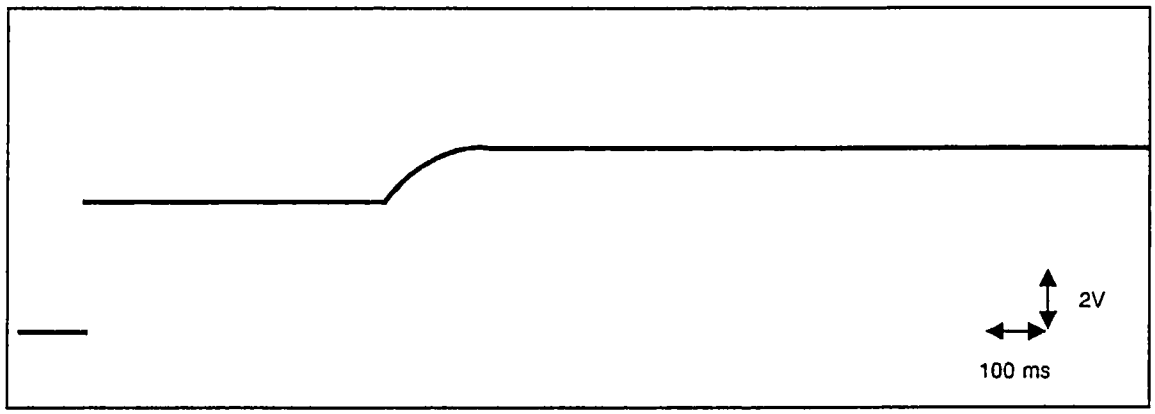

Cutoff speed: S200
Gain factor: 700

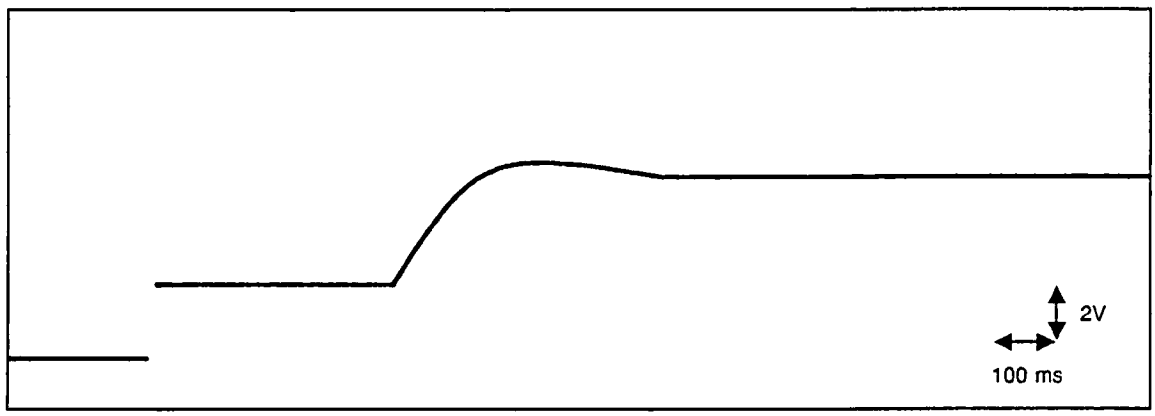

Cutoff speed: S300
Gain factor: 700

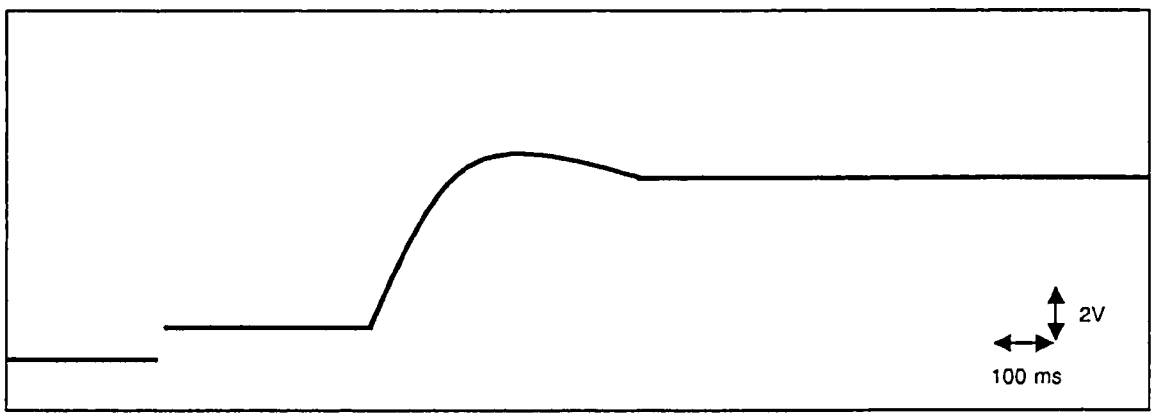

© Siemens AG 1990 All Rights Reserved 6ZB5 410-0EN02

Cutoff speed: S400
Gain factor: 700

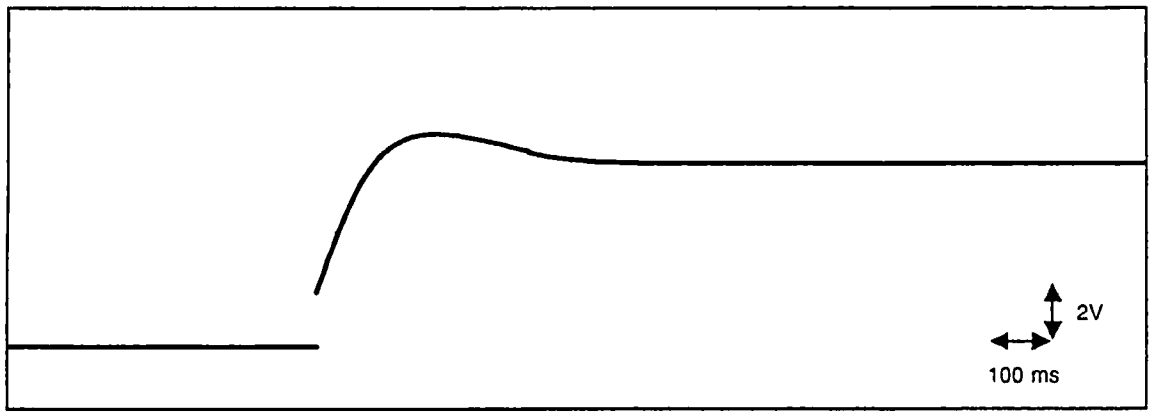

Cutoff speed: S100
Gain factor: 350

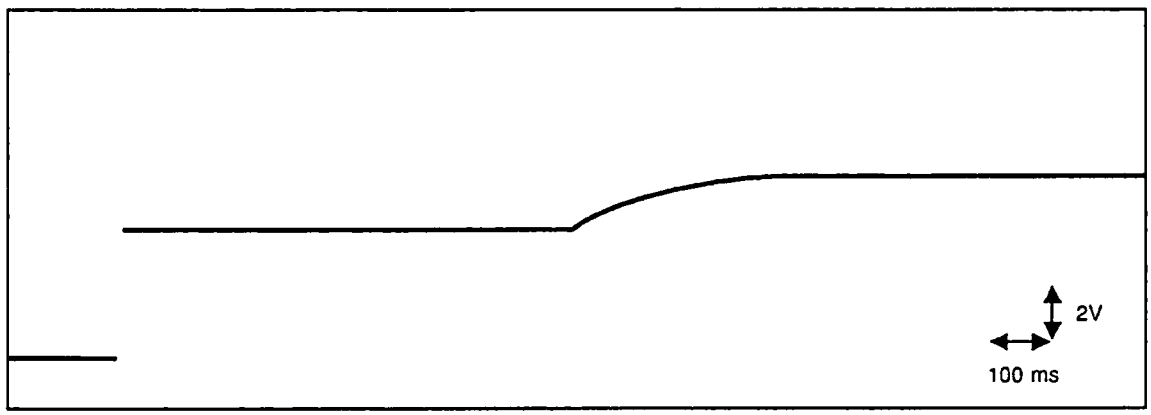

Cutoff speed: S200
Gain factor: 350

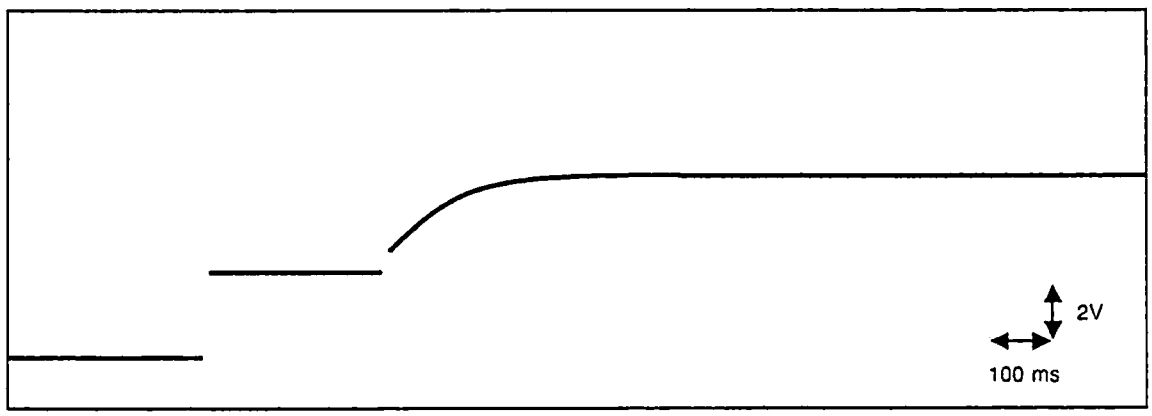

© Siemens AG 1990 All Rights Reserved 6ZB5 410-0EN02

Cutoff speed: S300
Gain factor: 350

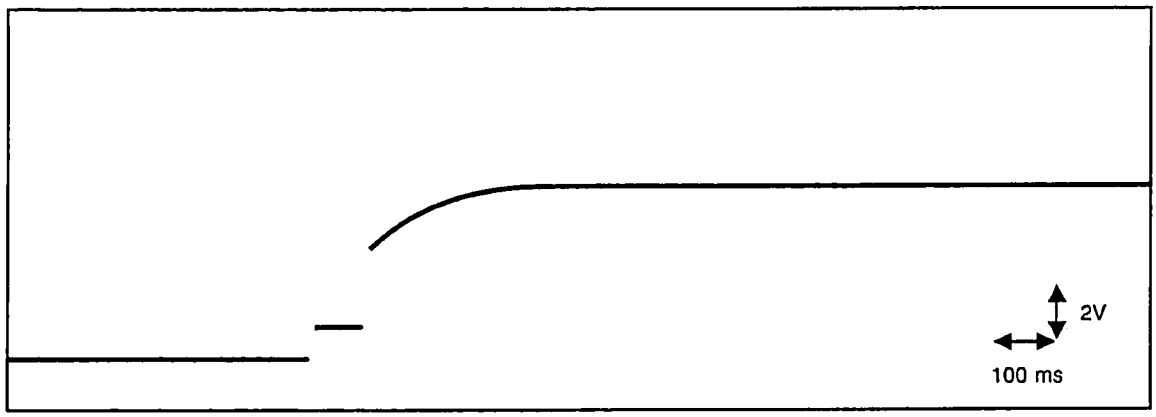

Cutoff speed: S400
Gain factor: 350

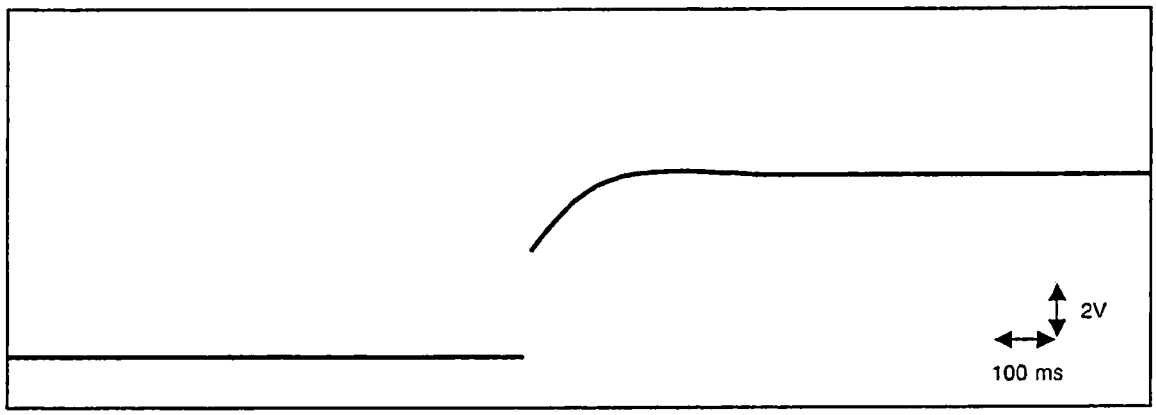

Cutoff speed: S200
Gain factor: 2000

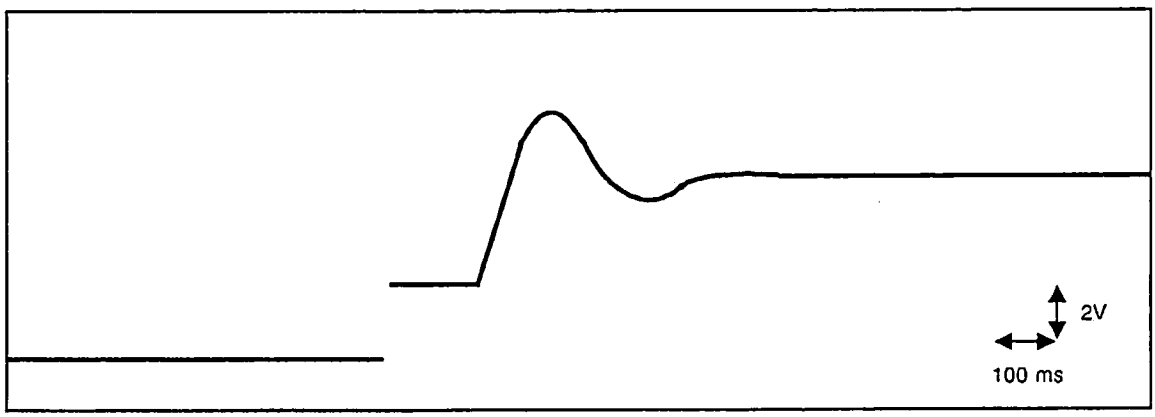

Signal sequence for M19, triggered by part program (NC-internal)

© Siemens AG 1990 All Rights Reserved 6ZB5 410-0EN02

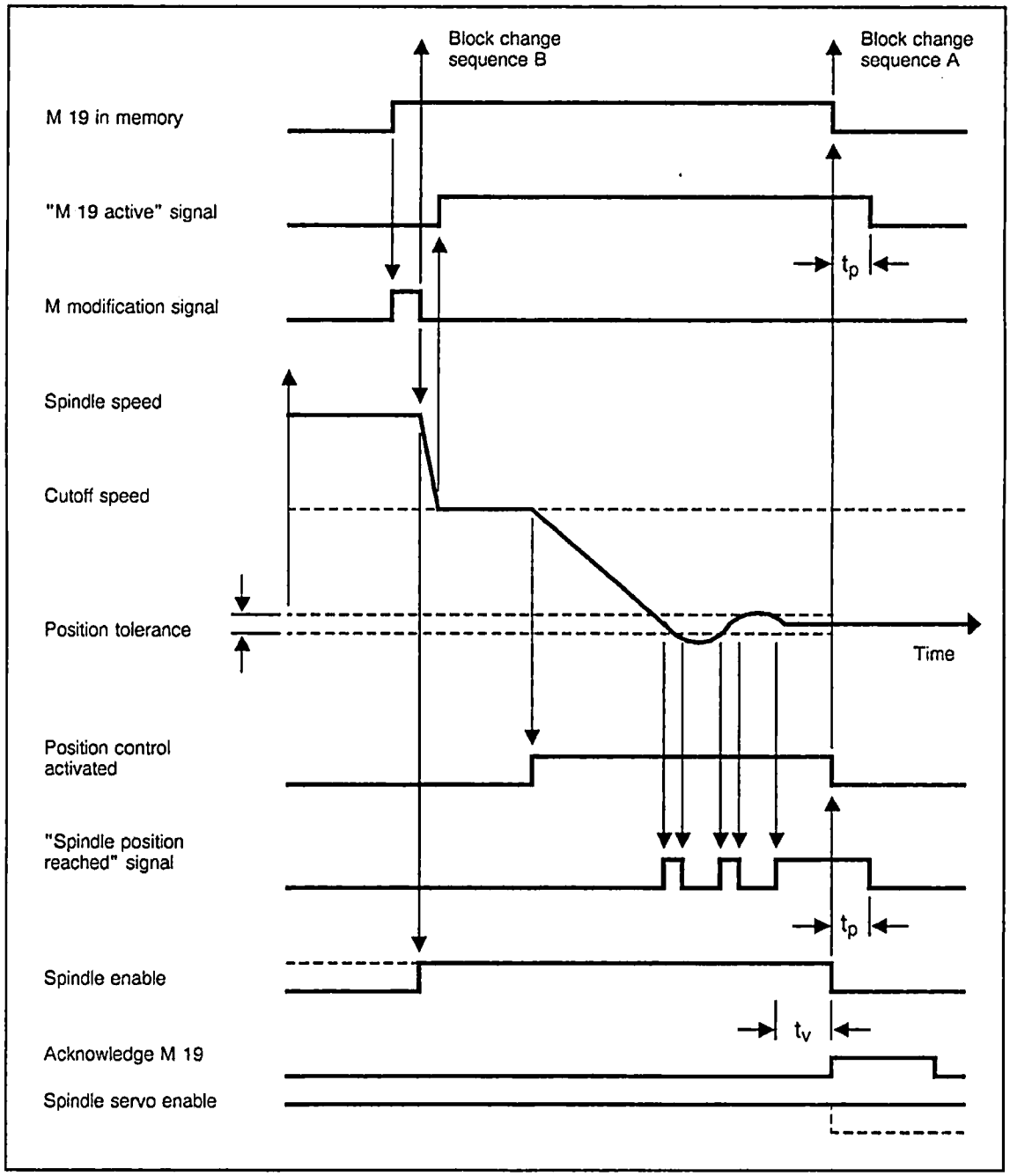

tv: ..... Delay so that positioning is not aborted by overshoot. The delay must be implemented in the PLC program.

tp: ..... Time delay, 1 PLC cycle

When positioning is PLC controlled, the PLC initiates the positioning procedure by forwarding the "PLC spindle control" and "Spindle positioning" signals to the spindle. The setpoint position is specified in NC MD 452* ("Spindle position for ext. M19").

© Siemens AG 1990 All Rights Reserved 6ZB5 410-0EN02

The positioning procedure is terminated when the PLC forwards the "Acknowledge M19" signal to the spindle together with the "Position reached" signal. Positioning is also possible from the zero speed state.

The sequence is otherwise identical to that for NC internal spindle positioning.

Note:

It is not possible to use both variants (M19 via NC and M19 via PLC) simultaneously.

Signal sequence for M19, triggered by the PLC.

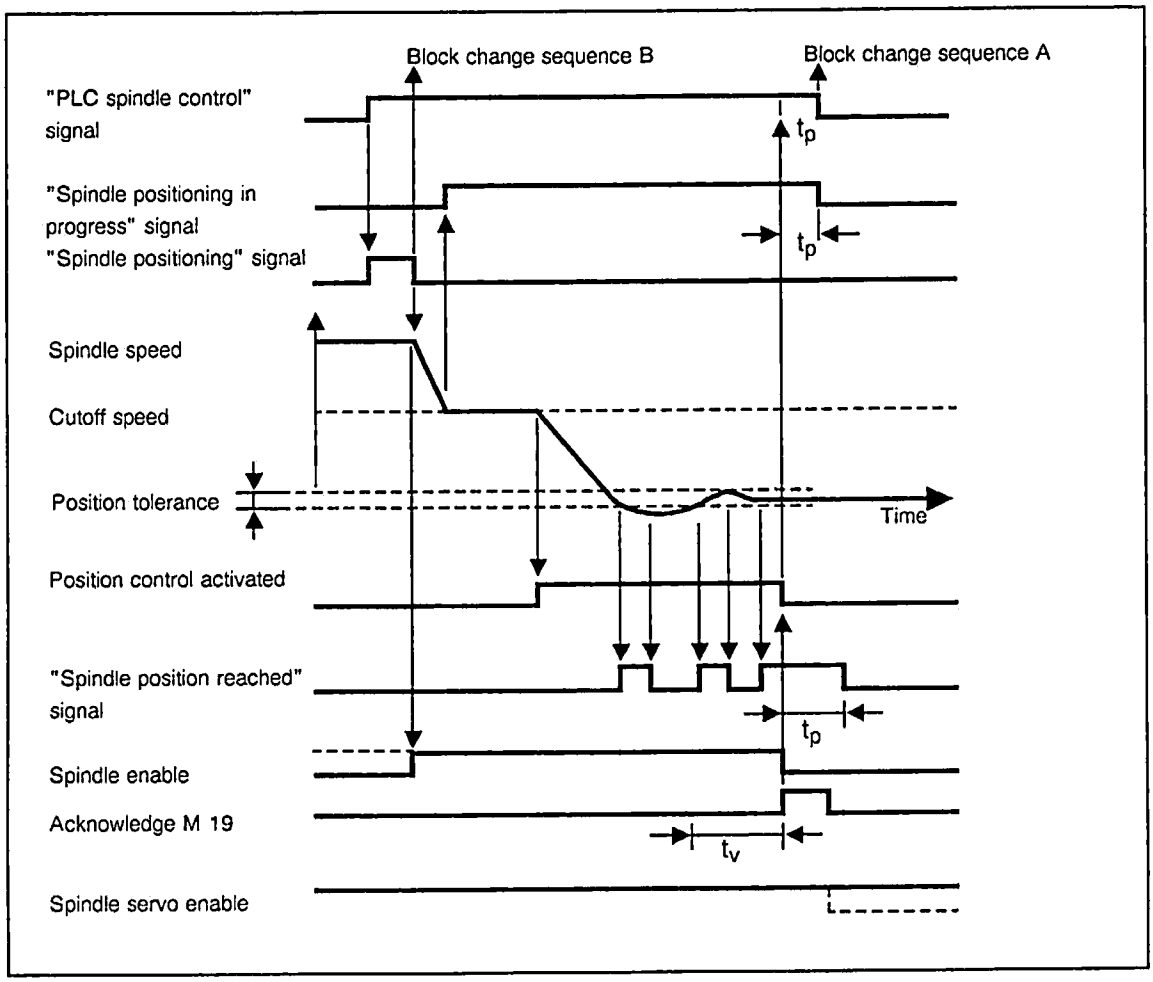

tv: ..... Delay so that positioning is not aborted on overshoot. The delay must be implemented in the PLC program.

tp: ..... Time delay, 1 PLC cycle

© Siemens AG 1990 All Rights Reserved 6ZB5 410-0EN02

M19 from zero speed

When it is at zero speed, the spindle will always approach the programmed position over the shortest path. The "Set direction of rotation clockwise" signal (DB 31 DRK +2, bit 7) has no significance. The conditions for spindle enable must be observed.

Positioning accuracy

The target position is programmed in 0.1 degrees with decimal point. The positioning accuracy depends on the gain factor, the gear and the drift. The maximum attainable accuracy is as follows:

$$\text{Encoders with 1024 pulses: } \frac{360}{1024 \times 4} = \text{approx. 0.1 degrees}$$

$$\text{Encoders with 512 pulses: } \frac{360}{512 \times 4} = \text{approx. 0.2 degrees}$$

Example of the dependency of positioning accuracy on gear and gain factor:

- Gear 1
  Maximum speed 3000 rev/min = setpoint = 10 V
  Gain factor e.g. 200 rev/min 360°

$$\rightarrow X = \frac{200}{3000} \times 10\ V = 0.666\ V/360°$$

X = Computational setpoint which the NC would output if the spindle were at 360 degrees to the position

$$\text{Smallest voltage unit } 1\ VELO = \frac{10\ V}{8192} = 1.2\ mV$$

$$p = \frac{1.2\ mV}{666\ mV} \times 360° = 0.64° \text{ positioning accuracy}$$

- Gear 2
  Maximum speed 10 000 rev/min = setpoint = 10 V
  Gain factor 200 rev/min 360°

$$\rightarrow X = \frac{200}{10\,000} \times 10\ V = 0.2\ V/360°$$

Smallest voltage unit 1 DAU = 1.2 mV

$$p = \frac{1.2\ mV}{200\ mV} \times 360° = 2.16° \text{ positioning accuracy}$$

© Siemens AG 1990 All Rights Reserved 6ZB5 410-0EN02

From a purely computational point of view, positioning accuracy could be improved by increasing the gain. However, it is important to remember that this also increases the spindle's tendency to oscillate.

M19 and RESET

NC MD 520* bit 6 (no M19 abort on RESET) can be used to prevent the M19 function from being aborted with end-of-program (M30/M2) or RESET (key). In this case, M19 is aborted only by the "Acknowledge M19" signal from the PLC, by alarms that revoke NC Ready 2, or by EMERGENCY STOP.

Acknowledge M19

If the NC outputs the "Spindle position reached" signal while positioning is in progress, the PLC must output the "Acknowledge M19" signal if the M19 function is to be terminated. The "Acknowledge M19" signal, however, may be generated only when the spindle is in a steady condition. In the event of serious overshoot (very high gain), it is advisable to delay output of the "Acknowledge M19" signal to the NC until the "Spindle position reached" signal has been present for a machine specific period of time (t_V).

The "Acknowledge M19" signal not only aborts spindle positioning, but also shuts down the spindle (the same as M05), thus necessitating programming of a ***new*** M03 or M04 in the part program to enable the spindle to accelerate to the originally programmed S value.

The "Acknowledge M19" signal is effective only in conjunction with "PLC spindle control".The M functions M3 and M4 also end positioning, regardless of whether or not the position has been reached.

Spindle servo enable for M19

Spindle servo enable (DB 31 DLK +1, bit 6) cannot be used to control M19. Moreover, it must be set before M19 is invoked, i.e. the M modification signal can be used only to revoke Spindle Disable; spindle servo enable must already be set.

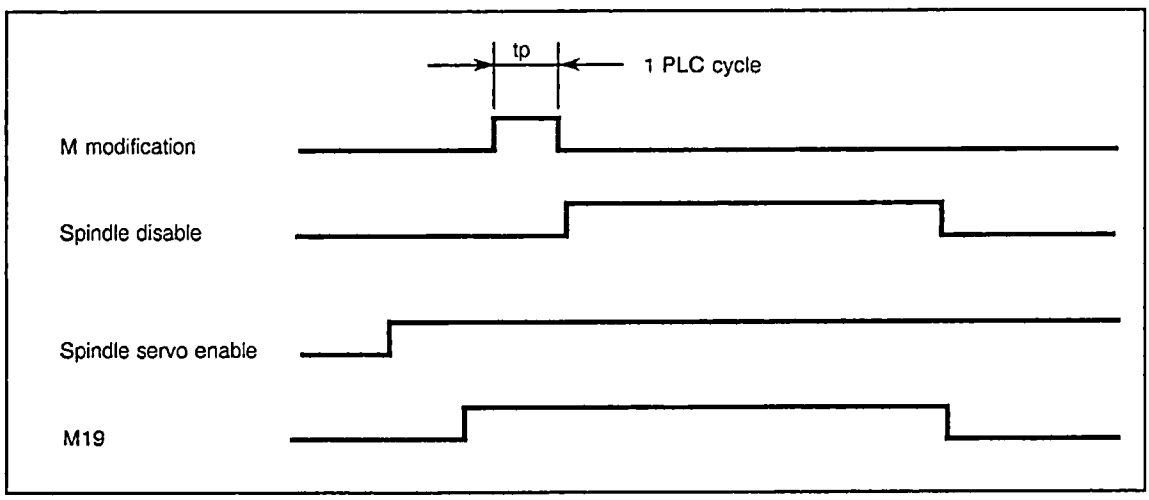

© Siemens AG 1990 All Rights Reserved 6ZB5 410-0EN02

Position control direction with M19

If the spindle is to be switched from open-loop to closed-loop control with M19, the pulses from the ROD encoder must have the correct direction of rotation on reaching the control. An incorrect position control direction is characterized by the fact that the spindle, when 180 degrees away from the programmed position, oscillates severely around the position. In this case, NC MD 521* bit 1 must be inverted.

6.4 PLC intervention in spindle control

The flowchart on the next page shows the effects of the various PLC interface signals on the spindle. For the sake of clarity, the feedback pulses are not shown.

The "Set direction of rotation clockwise", "Oscillation speed", "Spindle positioning", "Resynchronize spindle" and "Acknowledge M19" signals are effective only in conjunction with the "PLC spindle control" signal.

© Siemens AG 1990 All Rights Reserved 6ZB5 410-0EN02

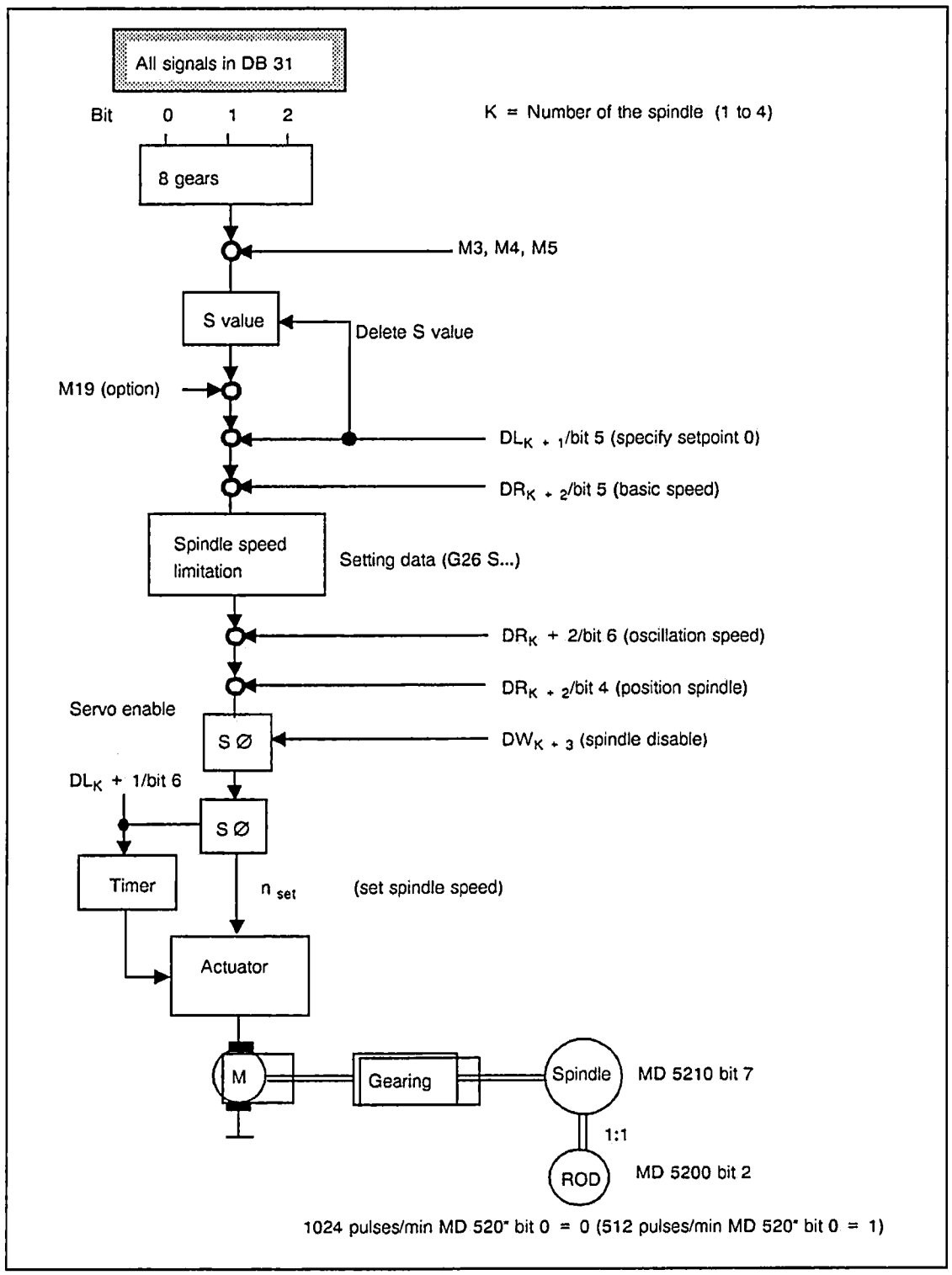

DRK + 1

© Siemens AG 1990 All Rights Reserved 6ZB5 410-0EN02

7 PLC Installation

7.1 135 WB

A 135 WB is used as PLC CPU in the SINUMERIK 840. This PLC is referred to as a "RAM machine", i.e. on an overall reset, the operating system and the user program are loaded from EPROM into internal RAM.

Front view

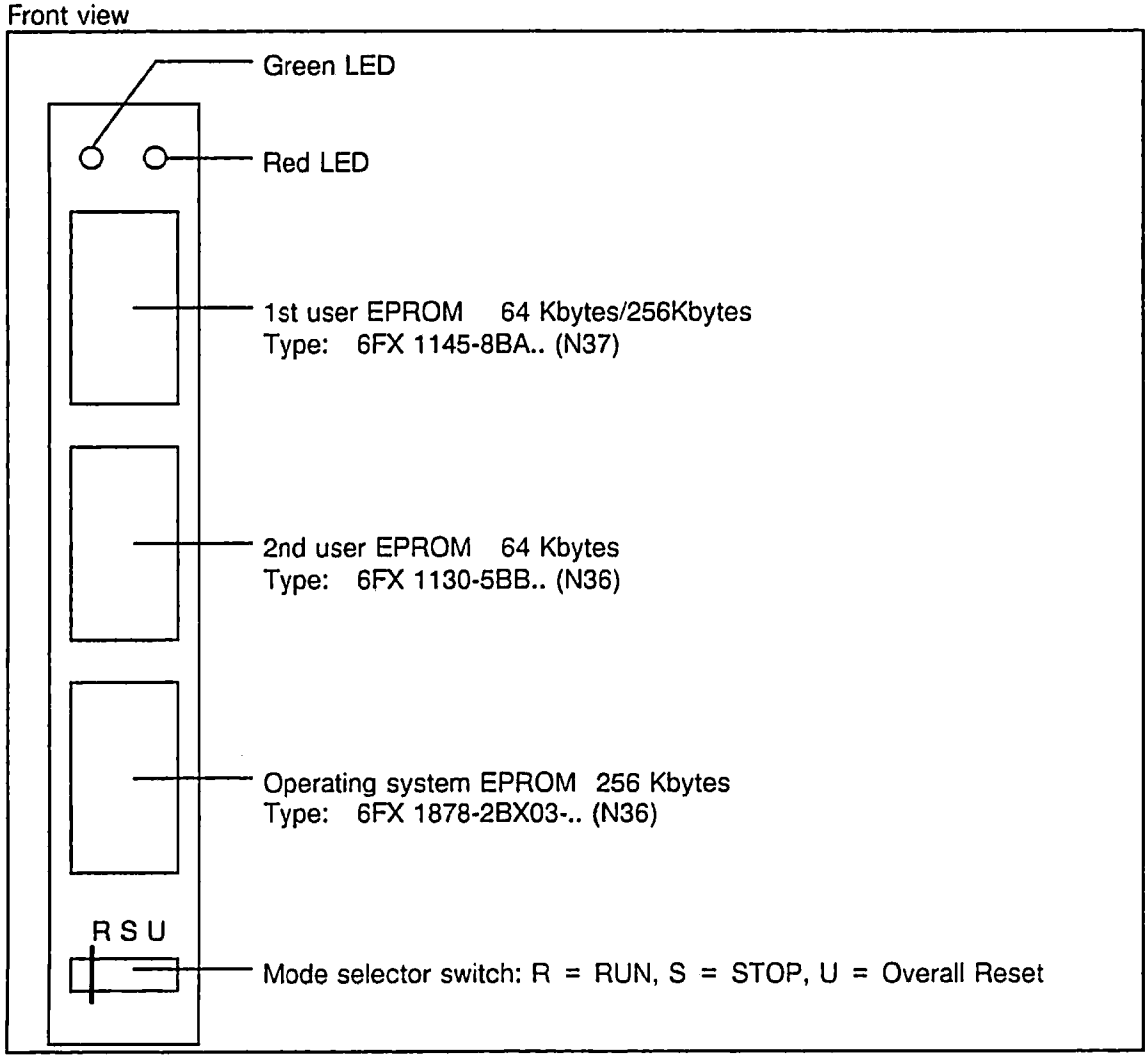

7.2 Installation

Installation of the PLC 135 WB is subordinate to the installation of the numerical machine tool control (NC). The CPU of the PLC has subordinate functions in this case.

When the NC branches into the "Setting up mode over all reset" mode a setting up bit is set. In the NC, deletion and loading of NC and PLC machine data or parameter assignment for the system program can be executed, with the aid of which setting up of PLC 135 WB is controlled.

© Siemens AG 1990 All Rights Reserved 6ZB5 410-0EN02

7.2.1 Self-diagnostics program

After switching on the mains voltage, the interface control runs a self-diagnostics program. This program tests the most important hardware components and initializes the software required for continuing system start up.

If errors in the system are recognized, the LED on the front plate displays the error.

LED		Significance
Continuous (green only)		Cyclic operation
Continuous (red only)		STOP state
Continuous (red and green)		General reset required (initial power on or data loss)
Flashing	once	Error with cross-check sum via the system program
	twice	Error in the CPU RAM test
	3 times	Error Timer 0 (process internal timer) or Watchdog error
	4 times	Error in monitoring test for timeout
	5 times	Access to link RAM not possible. This may also be the case, for instance, when the mains supply fails during comprehensive part program manipulations (copying of a longer file).
	6 times	Error with test access to link RAM
	7 times	Error in system initialization program
	9 times	SINUMERIK 840: synchronisation error in PG link
	10 times	Error of the internal co-processor (COP) register or in the step address counter (SAZ) creation
	11 times	Command delegation to word processor (WOP)
	12 times	Processing of binary commands
	13 times	Processing of OR, bracket expressions, NOP or BLD commands
	14 times	Processing of block calls and jump commands
	15 times	Processing of timer and counter operations
	16 times	Addressing in data memory
	17 times	Command execution mode
	18 times	Test address comparator machine code (MC5) and interrupt processing via co-processor
	19 times	Monitoring test for timeout with access of the co-processor to the user memory
	20 times	ACOP Redesign not inserted

© Siemens AG 1990 All Rights Reserved 6ZB5 410-0EN02

7.2.2 System initialization program

After the self diagnostics program has been run through, the system initialization program is requested.

In its first section, the data required for running the organization program are set up. This setting up includes:

- Stack organization,
- Segmentation for word processor and co-processor,
- Entries in the location dependent CPU interrupt table,
- Task priority lists,
- Setting up task data,
- Initialization of counts and periodic values.

In the second section the system initialization program defines the type of start up after switching on the mains voltage. The following points are checked:

- Whether the switch-on test pattern is missing (i.e. data lost)
- Whether there is a battery interrupt
- If the setting-up bit is set
- Request from the NC "automatic warm restart after setting-up overall reset"
- STOZUS operating status bit set (acquisition of interrupt event or continuation of the STOP state, see Section 8)
- Cold restart or warm restart attempt aborted.

If the STOZUS identifier is set, the control remains in the STOP state.

If, in the second section, (testing of run-up after switching on the mains voltage) the STOZUS identifier is not set, but one of the other conditions is fulfilled, an automatic cold restart is executed; a warm restart of the control only occurs if none of the mentioned conditions are fulfilled.

Overall reset with subsequent bootstrapping of the user memory (URLOE = 1) is always required

- If first setting up is instigated,
- Data loss has occurred by removing the PLC CPU or, in the case of power failure, due to simultaneous battery voltage failure.

If the mains voltage fails during active processing checks, the processing checks are aborted by the programmer. The system initialization program instigates the cold restart.

© Siemens AG 1990 All Rights Reserved 6ZB5 410-0EN02

7.2.3 Timeout analysis

A write access to the communication or local bus is executed by the bus interface. The processor immediately receives an acknowledgement and continues. (Buffered access to communication/local bus). If a timeout occurs during such an access, the current state of the registers of the processor and coprocessor give no information as to the cause of the timeout.

The user can switch off buffered accesses to the communication and local bus (e.g. to test STEP 5 programs during the installation phase) via machine data (PLC operating system MD bits 6049.0). These accesses are then slower because the processor only receives an acknowledgement when the whole bus cycle has finished.

Machine data 6049.0 must be set in order to be able to determine the exact cause of a timeout.

7.2.4 Error list for PLC 135 WB

The operating system can detect malfunctioning of the central processor, errors in the system program or the effects of erroneous programming on the part of the user.

If, while executing a command, the interpreter encounters another error which will result in a program interrupt, it branches to the STOP loop.

A more exact error analysis can be carried out with the help of the PG 685 or 750 or the detailed error code which is integrated into the control. The interrupt stack and the detailed error code, which are regularly updated in Section 8 of the Installation Lists, are available for this purpose.

© Siemens AG 1990 All Rights Reserved 6ZB5 410-0EN02

7.3 Operation using the PG

7.3.1 Connecting the programmer

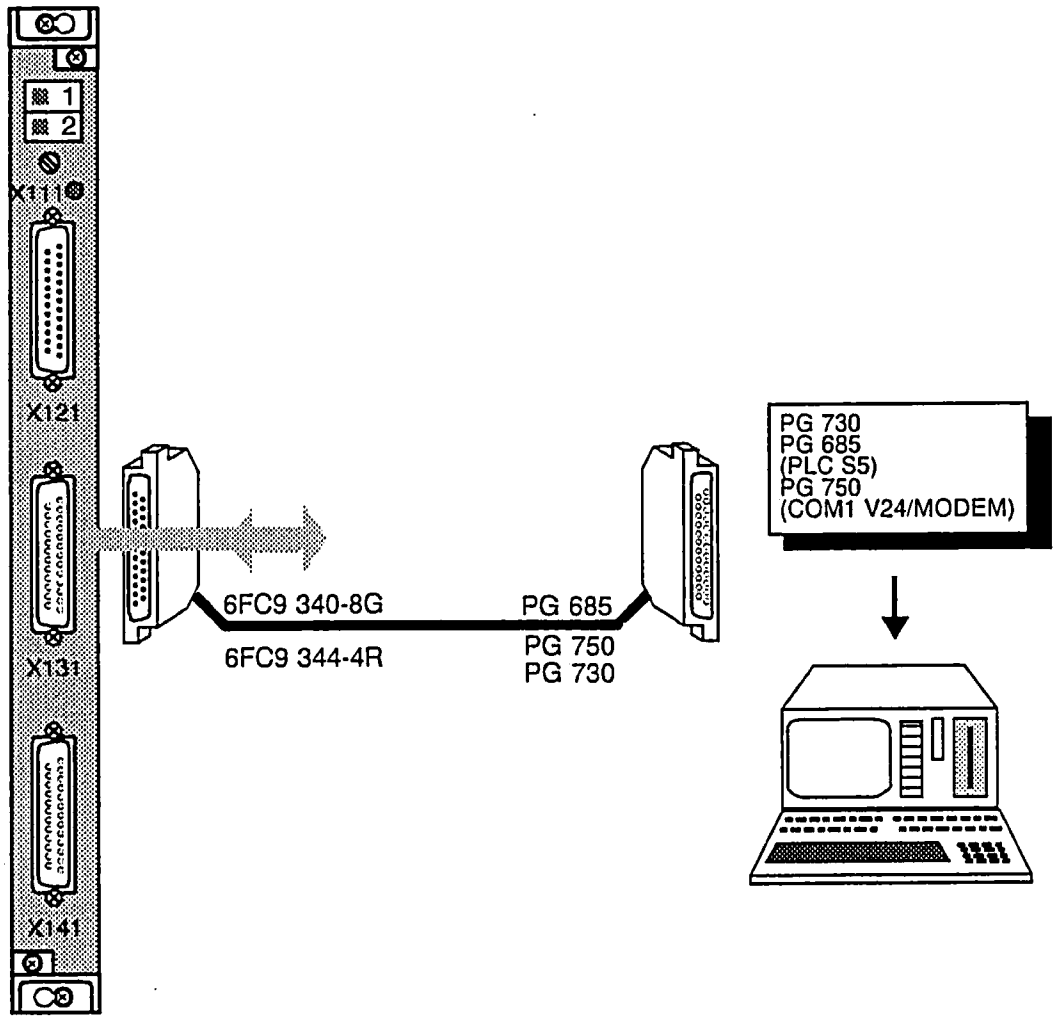

CPU Interface
6FX1 123-3CA00

Only the PG 750/730 and PG 685 programmers with software versions ≥ 4 and 4+ may be used with the PLC CPU 135 WB.

© Siemens AG 1990 All Rights Reserved 6ZB5 410-0EN02

7.3.2 PLC PG 685/PG 750/PG 730 link

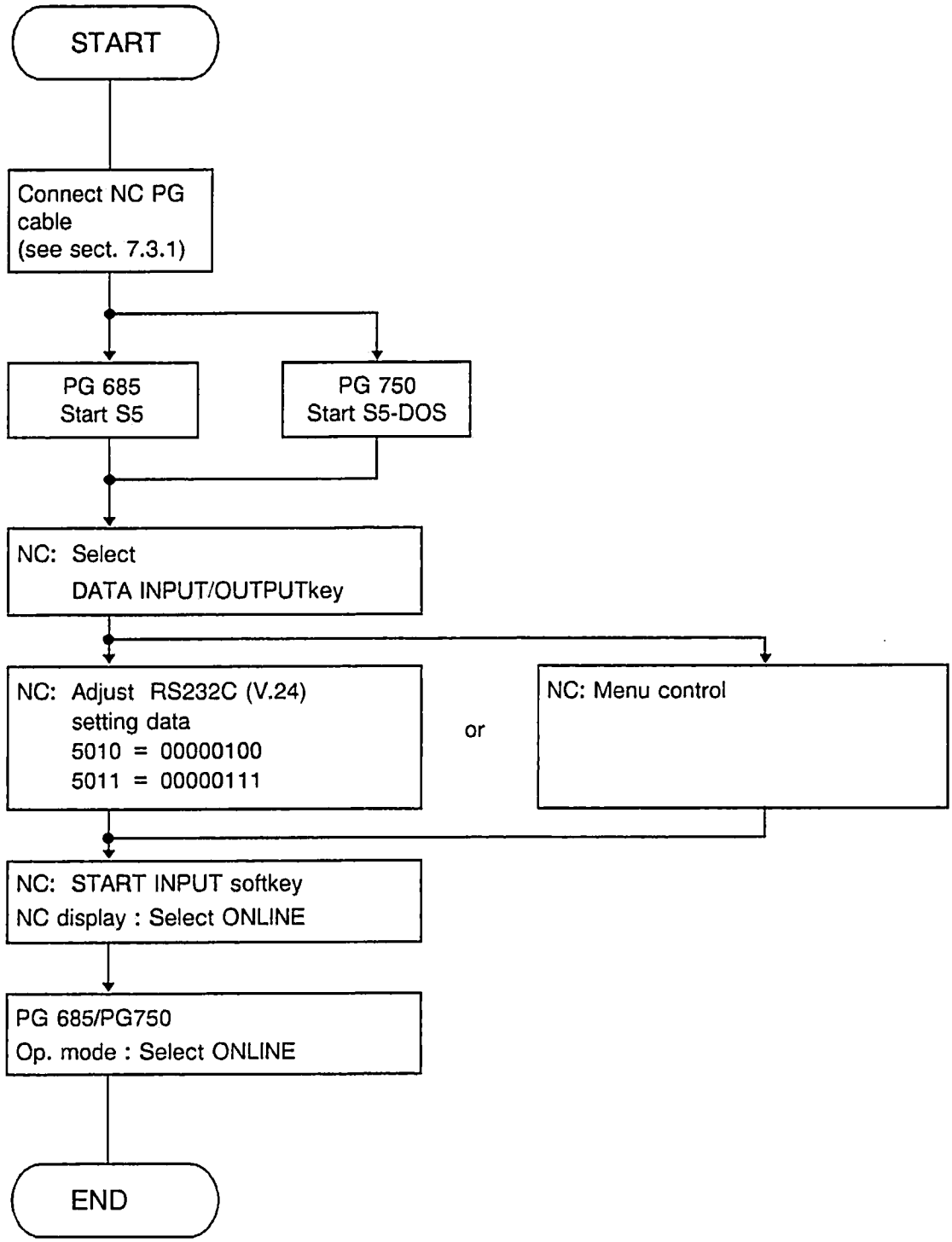

© Siemens AG 1990 All Rights Reserved 6ZB5 410-0EN02

7.4 PLC status

In "PLC STATUS" mode, the user can read out the contents of counters and timers and read out and write to input words, output words, flag words, data words and data doublewords, whereby a Write requires entry of a password.

7.4.1 Operator entries in PLC STATUS mode

Key or [1]	PRESELECTION:	Any existing byte number may be preselected
Key	Page DOWN:	The byte number is incremented by one
Key	Page UP:	The byte number is decremented by one
Key or [1]	INPUT:	Enter new value for the selected word or bit
Key	RECALL:	Return to preceding display

1) For SINUMERIK 19" Operator panel

© Siemens AG 1990 All Rights Reserved 6ZB5 410-0EN02

7.4.2 Select PLC status display

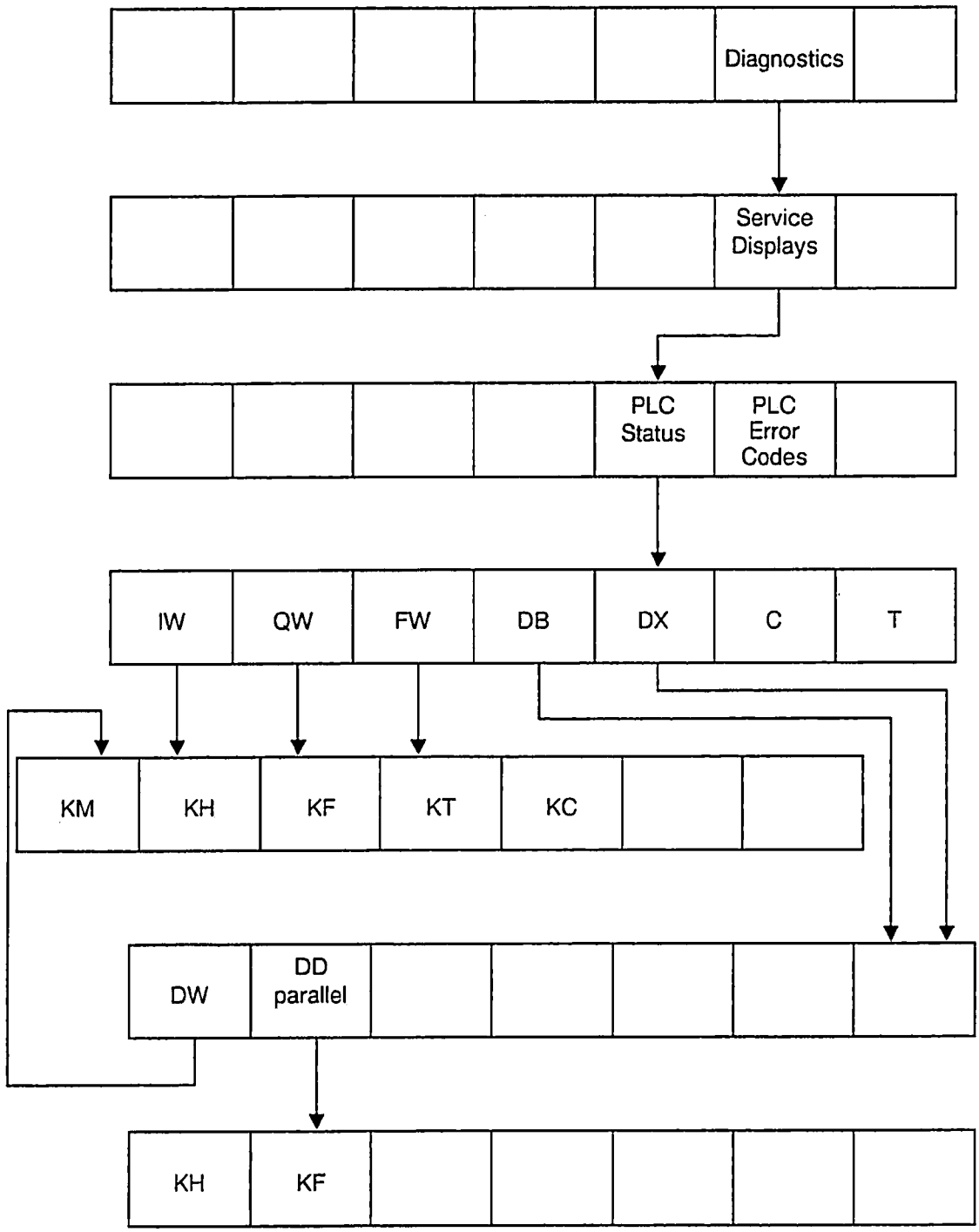

© Siemens AG 1990 All Rights Reserved 6ZB5 410-0EN02

	Read	Write	Data number
Input word	×	×	0 - 126
Output word	×	×	0 - 126
Flag word	×	×	0 - 254
Data word	×	×	0 - 254
Data doubleword	×	×	0 - 254
Timers	×	-	0 - 127
Counters	×	-	0 - 127

Reading input, output and flag words

Softkey: IW, QW, FW

Keys Preselect word number 14

Reading data words

Softkey DB to select a DB
Softkey DX to select a DX

Preselect DB (DX) with

Preselect data word with DB
Preselect data words from two contiguous DBs (DXs) with DD

Example:
Selecting DW 5 in DB 10
PLC Status softkey
DW softkey

Keys 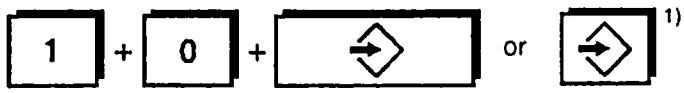 to select DB 10

Softkey DW 1)

Keys to preselect word no. 5

1) Actuation of the DD softkey selects data words from DB10 and DB11, e.g. DW5 in DB10 and in DB11.

1) For SINUMERIK 19" Operator panel

© Siemens AG 1990 All Rights Reserved 6ZB5 410-0EN02

Reading the contents of timers and counters

Softkey: T or C

Keys or [1] Preselect timer or counter number 6

The time is always displayed in seconds, regardless of how it was programmed in STEP 5.
The count is displayed in BCD code.

Display formats

KM:	Binary	0 and 1
KH:	Hexadecimal	0 to F
KF:	Fixed-point	0 to 9
KT:	Time	0.01 to 999
KC:	Count	0 to 999

1) For SINUMERIK 19" Operator panel

© Siemens AG 1990 All Rights Reserved 6ZB5 410-0EN02

8 NC Machine Data (NC MD)

8.1 General remarks

8.1.1 Entering NC machine data

NC machine data are used to "adapt" the NC to the machine tool. It is up to the person installing to ascertain and optimize all items of machine data not preset by the manufacturer or end user.

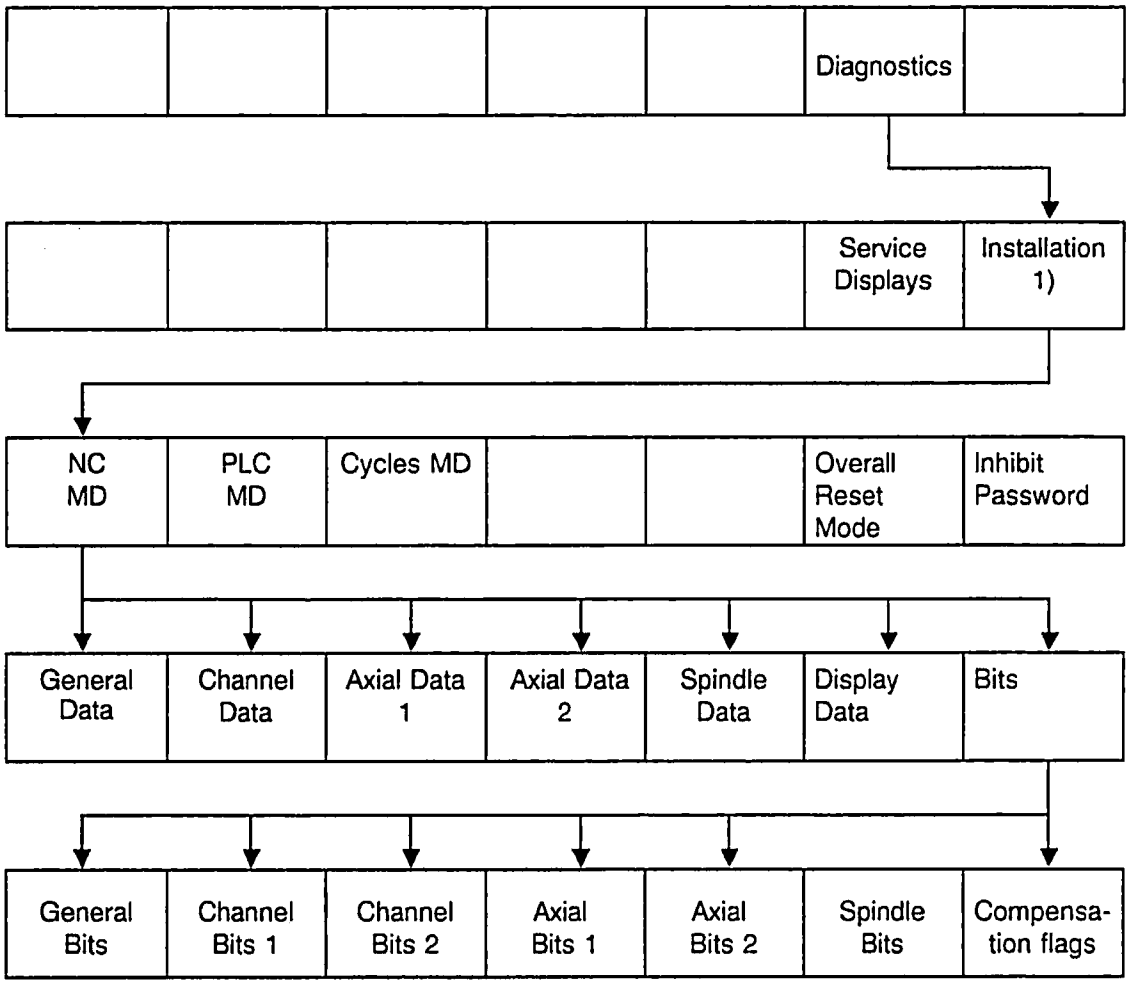

A password must be entered before machine data can be modified.

1) "Installation" can be inhibited with the keyswitch when bit 5 of NC MD 5006 is "1".

© Siemens AG 1990 All Rights Reserved 6ZB5 410-0EN02

Note:

The meaning of an NC MD bit always refers to the **set** state of that bit. The statement (name) must be negated when the bit is **not** set.

Items of machine data for which there are no descriptions are either set to 0 when the standard machine data are loaded or the control installed, or are preset according to the control's configuration. In "Overall Reset" mode, the standard machine data are preset when the NC MD are loaded.

Once the machine data have been entered or modified, the input enable must be revoked via the "Inhibit Password" softkey.

8.1.2 NC configuration

The following configuration data can be defined at the time of installation or on a warm restart:

The number of

- measuring circuit modules
- input/output modules
- PLC expansion units
- mode groups
- channels
- TO areas (tool offsets)
- axes
- spindles

The maximum configuration for a SINUMERIK 840 comprises the following:

9 measuring circuits (axis + spindle)
8 real axes on the 840 T
12 real axes + fictitious axes
4 spindles
4 channels
2 mode groups

All of these areas are associated either in whole or in part with other areas.

© Siemens AG 1990 All Rights Reserved 6ZB5 410-0EN02

8.1.3 Additional configuring information

Two mode groups and four channels can be implemented on the SINUMERIK 840. The channels are allocated to the mode groups via machine data, i.e. the channels are subordinate to the mode groups. The available axes are also allocated to the mode groups via machine data.

Basically, each channel is comparable to a separate NC. Each channel can execute its own program under PLC control. All channels allocated to one and the same mode group must all be operated in the same mode, while channels assigned to different mode groups via machine data can be operated in different modes simultaneously.

The axes are allocated to the channels in the part program rather than via machine data. This means that an axis can operate in different channels within a mode group, but not simultaneously.

In order to prevent collisions based on programming errors, it is possible to prohibit operation of a particular axis in a specific channel (NC machine data). The operator can select the various mode groups and channels via the operator panel keyboard; each mode group must be assigned at least one channel and one axis. Mode groups without spindles are allowed.

A channel can traverse only the axes in the mode group assigned to it. An axis can be traversed only in its assigned mode group. The warm restart function can be used to modify the configuration (mode group assignments) without having to reapproach the reference points (for a detailed description of the warm restart function, refer to Section 12).

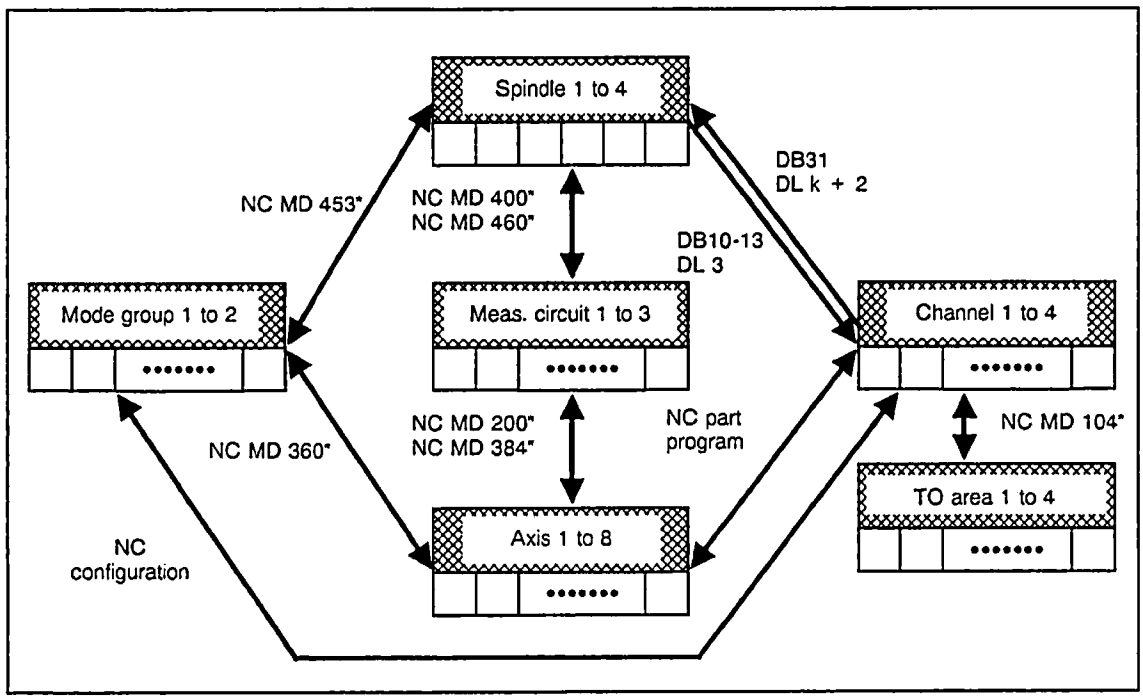

© Siemens AG 1990 All Rights Reserved 6ZB5 410-0EN02

Tasks performed by the master channel

Within a mode group, the channels are processed in ascending order. Internally, the first channel of a mode group (the channel with the lowest number) assumes the role of master channel. In the event of a key-triggered reset (RESET on machine control panel), the master channel initiates execution of the following functions:

- Cancellation of all mode group-specific Reset alarms
- Cancellation of all axial Reset alarms in the mode groups
- Synchronization of all axes in the mode groups
- Deletion of all spindle-specific Reset data in the mode groups
- SERVO Reset for axes in the mode groups

The master channel also serves a special function for the channel-specific NC PLC interface (DB10 - 13):

If the signals

- RESET (DL 0, bit 6)
- Mode (DL 5, bits 0 to 3)
- DRF (DL 0, bit 7)

are present in the master channel of a mode group, these signals also apply to all other channels in that mode group. If these signals are present in the mode group in a channel other than the master channel, they apply to that channel only.

Exception

DRF and Mode can be set in the master channel only, and apply to the entire mode group.

© Siemens AG 1990 All Rights Reserved 6ZB5 410-0EN02

8.1.4 Breakdown of the NC MDs

NC MD	Description	Softkey	Section
0 to 999	General MD	General data	8.2
1000 to 1499	Channel-specific MD	Channel data	8.3
2000 to 3999	Axis-specific MD 1	Axial data 1	8.4
11000 to 14519	Axis-specific MD 2	Axial data 2	8.5
4000 to 4999	Spindle-specific MD	Spindle data	8.6
20000 to 20449	MD for display	Display data	8.7
	Machine data bits	Bits	8.8
5000 to 5199	General MD bits	General bits	8.8.1
5200 to 5399	Spindle-specific MD bits	Spindle bits	8.8.2
5400 - 5599	Channel-specific MD bits 1	Channel bits 1	8.8.3
9000 - 9299	Channel-specific MD bits 2	Channel bits 2	
5600 to 5999	Axis-specific MD bits 1	Axial bits 1	8.8.4
18000 to 18599	Axis-specific MD bits 2	Axial bits 2	8.8.5
6000 to 6999	Leadscrew error compensation bits	Compensation flags	8.8.6

© Siemens AG 1990 All Rights Reserved 6ZB5 410-0EN02

8.1.5 Areas for channels, axes and spindles

These MDs are marked with an asterisk (*). The asterisk indicates the channel, axis or spindle.

Channel area

MD		MD bits		Channel
104*	1040 1041 1042 1043	544*	5440 5441 5442 5443	1st channel 2nd channel 3rd channel 4th channel
	1044 . . . 1059		5444 . . . 5459	Unassigned
106*	1060 1061 1062 1063	546*	5460 5461 5462 5463	1st channel 2nd channel 3rd channel 4th channel
	1064 . . . 1079		5064 . . . 5079	Unassigned

and so on in increments of 20.

© Siemens AG 1990 All Rights Reserved 6ZB5 410-0EN02

Axis area

MD		MD bits		Axis
200*	2000 2001 2002 2003 2004 2005 2006 2007 2008 2009 2010 2011	560*	5600 5601 5602 5603 5604 5605 5606 5607 5608 5609 5610 5611	1st axis 2nd axis 3rd axis 4th axis 5th axis 6th axis 7th axis 8th axis 9th axis 10th axis 11th axis 12th axis
	2012 . . . 2039		5612 . . . 5639	Unassigned
204*	2040 . . . 2051	564*	5640 . . . 5651	1st axis . . . 12th axis
	2052 . . . 2069		5652 . . . 5679	Unassigned

and so on in increments of 40.

© Siemens AG 1990 All Rights Reserved 6ZB5 410-0EN02

Spindle area

MD		MD bits		Spindle
400*	4000 4001 4002 4003	520*	5200 5201 5202 5203	1st spindle 2nd spindle 3rd spindle 4th spindle
	4004 . . . 4009		5204 . . . 5209	Unassigned
401*	4010 4011 4012 4013		5210 5211 5212 5213	1st spindle 2nd spindle 3rd spindle 4th spindle
	4014 . . . 4019		5214 . . . 5219	Unassigned

and so on in increments of 10.

© Siemens AG 1990 All Rights Reserved 6ZB5 410-0EN02

8.1.6 Sample NC MD

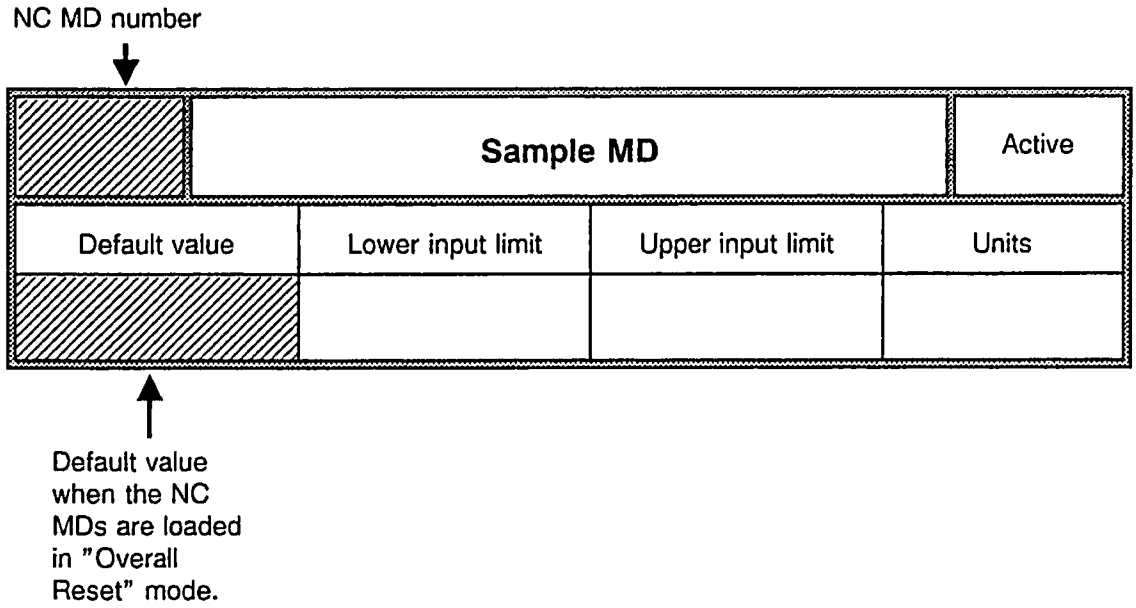

© Siemens AG 1990 All Rights Reserved 6ZB5 410-0EN02

8.2 General machine data (general data)

1	Speed behind pre-limit switch		Active at once
Default value	Lower input limit	Upper input limit	Units
500	+0	100 000	1 000 unit/min (IS)

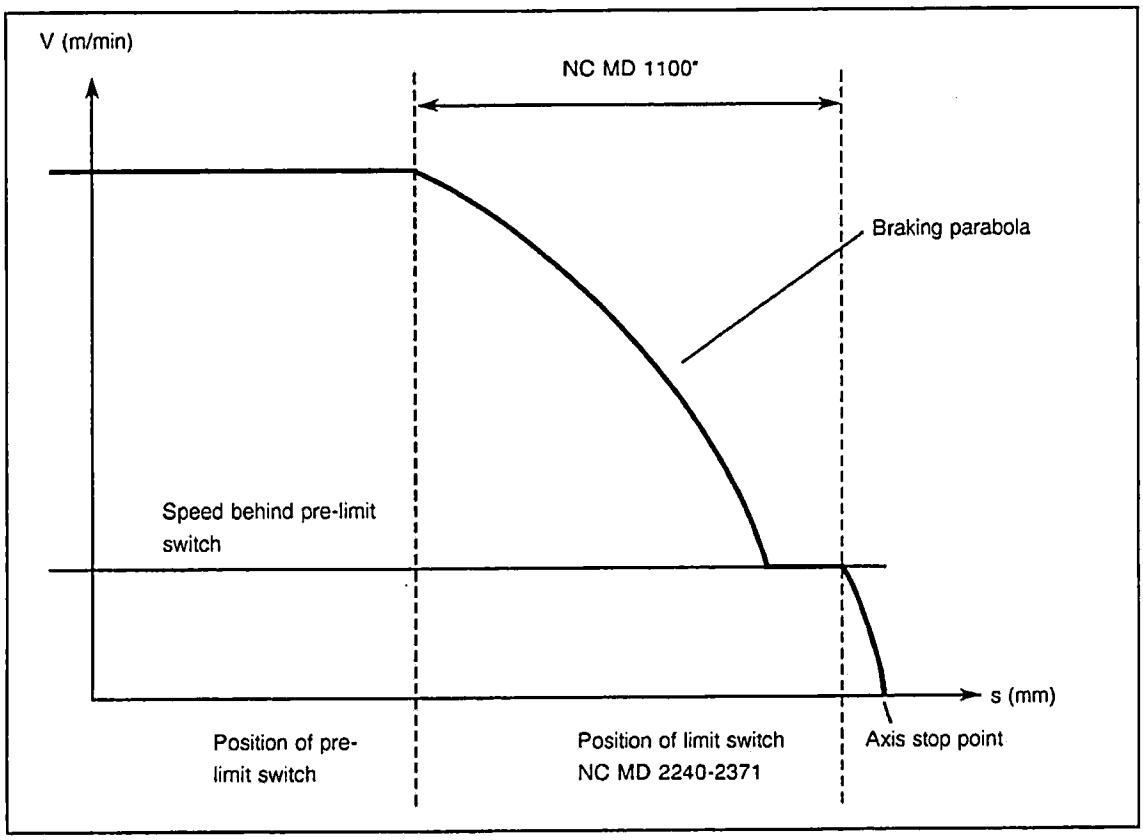

Note:

NC MD 1 has no effect when 0 is entered in NC MD 1100*.
Also refer to Axial Data, NC MD 2240-2371 and NC MD 1100*.

© Siemens AG 1990 All Rights Reserved 6ZB5 410-0EN02

3	Corner deceleration rate		Active at once
Default value	Lower input limit	Upper input limit	Units
500	+0	100 000	1 000 unit/min (IS)

In continuous-path operation (G64), block transitions are covered without feedrate reduction, i.e. the path is rounded at points of discontinuity in the contour to an extent that depends on the traversing rate.

As a result of function G62 (continuous-path operation with feedrate reduction), the tool path feedrate is reduced to the rate entered in NC MD 3, provided the selected feedrate was greater.

The rounding radius is thus reduced at discontinuous block transitions.

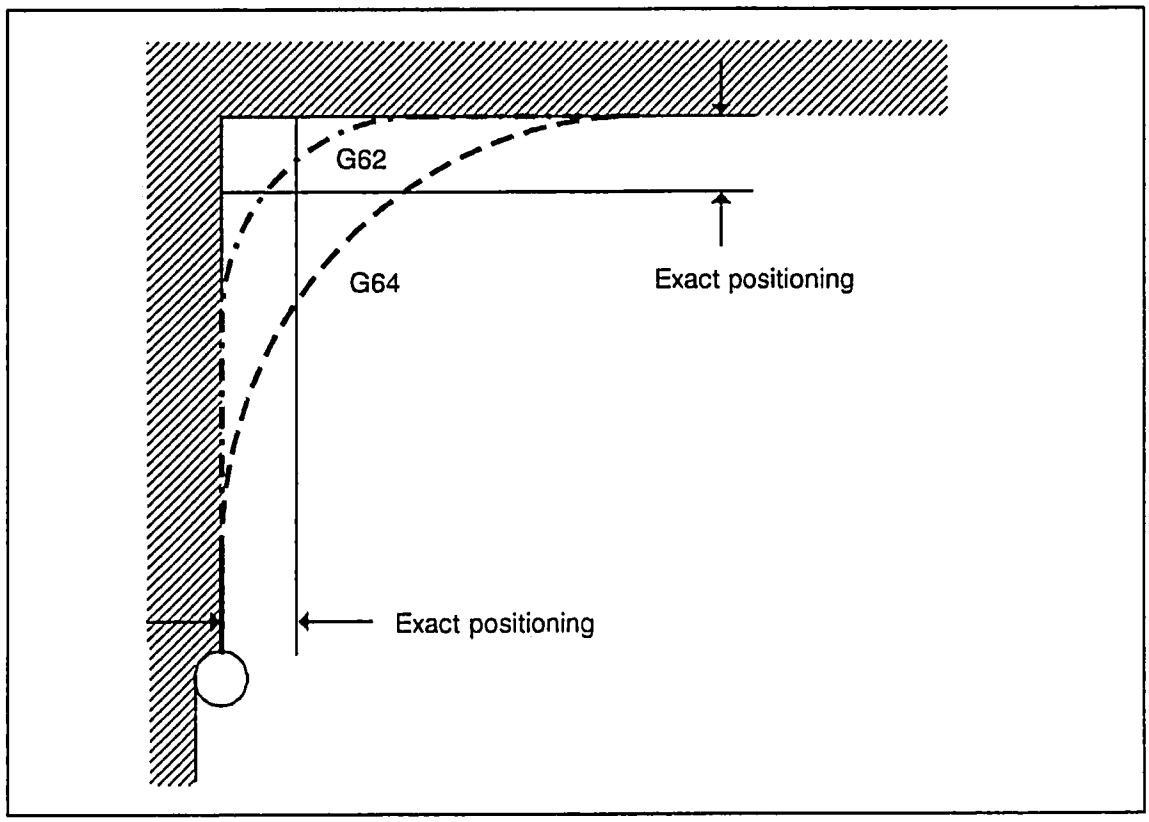

Practical application:

When the traversing rate must not become zero on a block change (exact positioning) but the feedrate in continuous-path operation is too high.

© Siemens AG 1990 All Rights Reserved 6ZB5 410-0EN02

6	Threshold for CRC insertion blocks		Active in next block
Default value	Lower input limit	Upper input limit	Units
500	+0	2 000	unit (IS)

One or more intermediate blocks for linear compensating movement(s) are inserted for transitions from a circular contour to a straight contour or to another circular contour (see Programming Guide). With these compensating movements, the programmed feedrate is maintained along the cutter center path; during machining, however, the rate of feed is maintained with respect to the workpiece contour. This results in differences in the feedrate. In order to prevent drops in speed if the travel is inadequate, the compensating movements beneath the threshold "d" are shortened or omitted as follows:

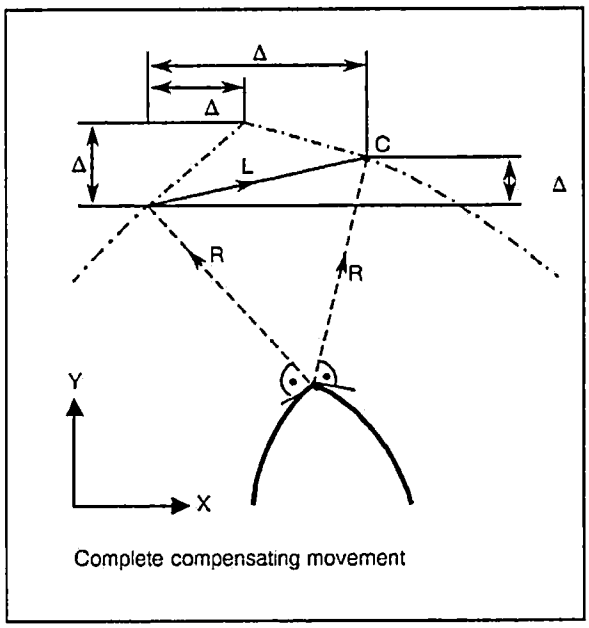

Complete compensating movement

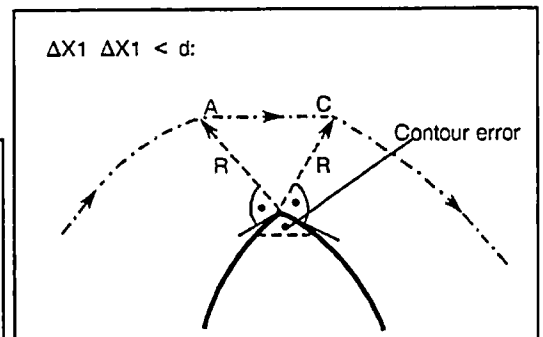

Shortened compensating movement A-C

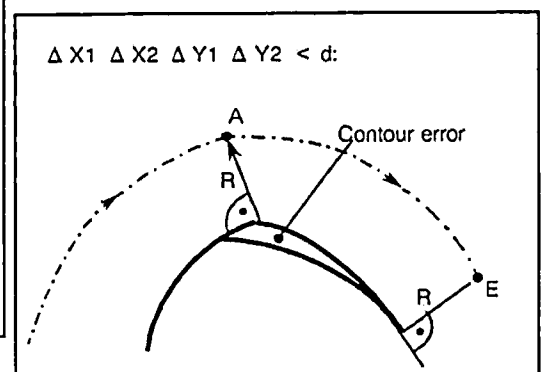

No compensating movement. The correct compensation is not attained until the end of the block (E).

© Siemens AG 1990 All Rights Reserved 6ZB5 410-0EN02

7	Circle end position monitoring		Active in next block
Default value	Lower input limit	Upper input limit	Units
5	+0	32 000	Unit (IS)

Before a circular block is processed, the NC checks the "correctness" of the programmed values by determining the difference between the interpolation parameters for the starting and end positions. If the difference exceeds the upper limit defined above, the block is not cleared for processing and alarm 2048 (circle end position error) is displayed.

If the difference is less than but not equal to zero, the circle center parameters are corrected, as it is then assumed that the end position has been correctly programmed. The circle is then traversed on the basis of the new center point.

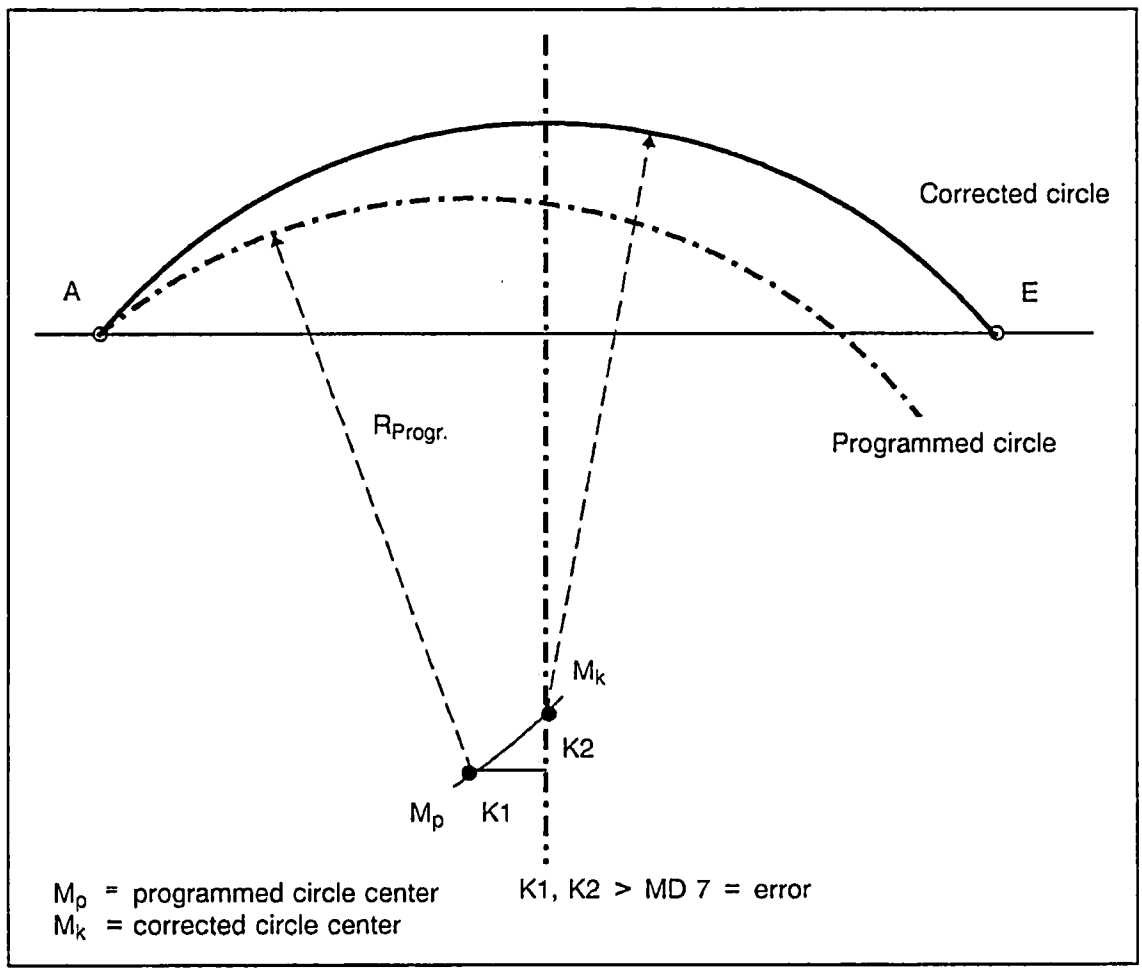

© Siemens AG 1990 All Rights Reserved 6ZB5 410-0EN02

9	Error window for repositioning on circle contour		Active in next block
Default value	Lower input limit	Upper input limit	Units
200	+0	32 000	unit (IS)

An automatic interruption during circular contouring (G2/G3) results in departure from the contour in JOG mode.

Prior to a new NC start, the contour must be reapproached in JOG mode.

If the axis is not within the tolerance limits (shaded area) specified in NC MD 9 following the NC start, alarm 3018 is displayed and the program is not started.

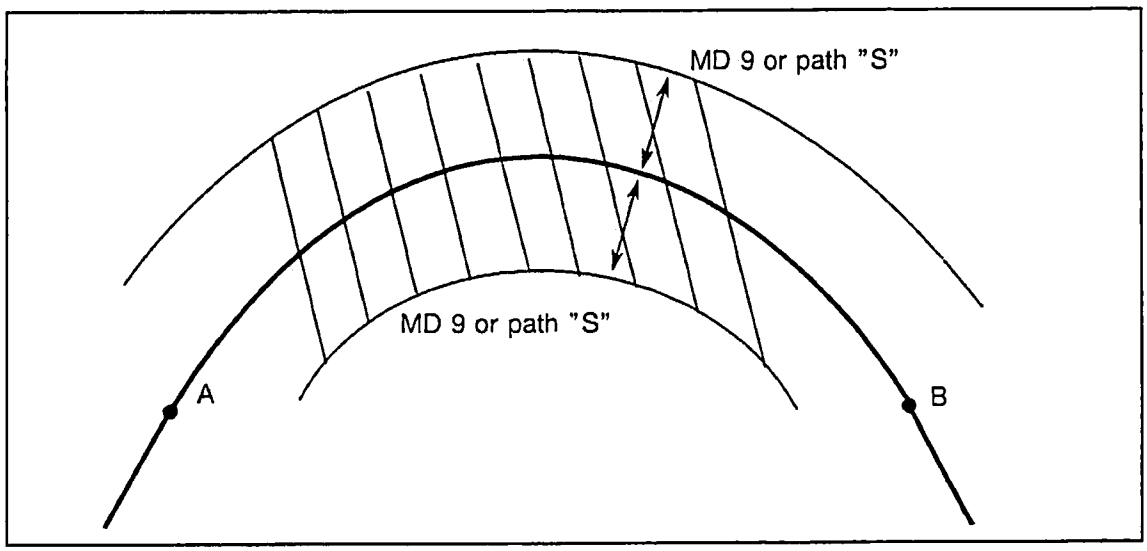

© Siemens AG 1990 All Rights Reserved 6ZB5 410-0EN02

10	Feed after block search		Active in next block
Default value	Lower input limit	Upper input limit	Units
1 000	+0	100 000	1 000 unit/min (IS)

If the machining program is started via a block search at a particular block rather than from the beginning, it is possible that the programmed rate will not match the travel (G95 or G96 active although no spindle is rotating; extremely low F value programmed).

Should the axes be at any position other than at the starting point of the first block selected in the block search, the control would output the programmed rate of the traversing block.
Since this could result in some very unusual situations, the axes are traversed to the first start position following a block search with the value specified in NC MD 10 (with G94).

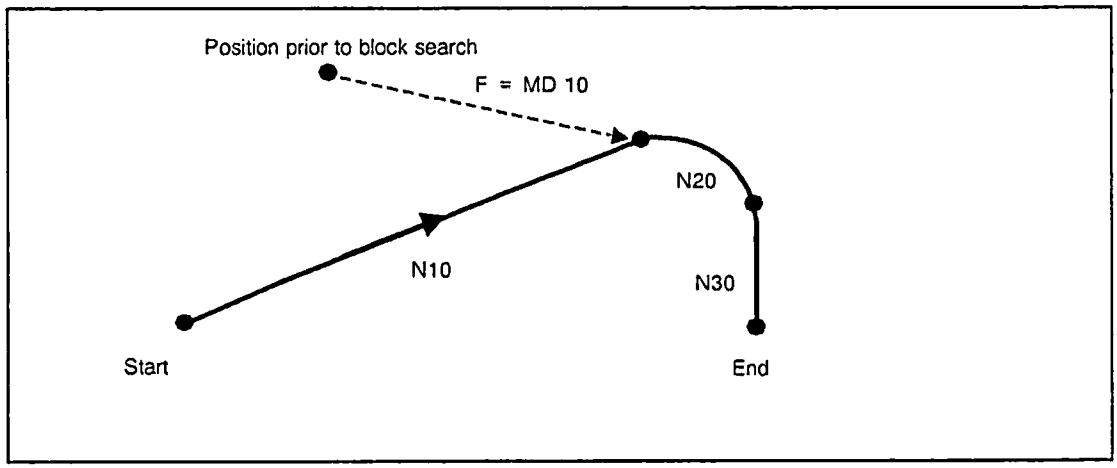

Example

Note carefully!

MD 10 has no effect on a block search with G00.
If the value 0 is entered in MD 10, the current feedrate of the program is effective together with the currently valid G94, G95 or G96.

© Siemens AG 1990 All Rights Reserved 6ZB5 410-0EN02

13	Number of TO parameters		Active - see below
Default value	Lower input limit	Upper input limit	Units
10	10	32	-

Normally, each tool offset has up to ten permanently allocated TO parameters. When required, the user can upgrade the number of parameters to 32, and must allocate the added parameters (10 to 32) using the configuring terminal. The greater the number of TO parameters allocated to a tool offset, the lower the number of tool offsets available to the user, as the memory space available for tool offsets is limited.

Parameter	TO, No. D memory		Comments
10	204	409	Initial state
11	186	372	
12	170	341	
13	157	315	
14	146	292	
15	136	273	
16	128	256	

With option H 81 (16Kbyte tool memory)

Basic version with 8Kbyte tool memory

Note carefully!

Modifications do not take effect until user memory has been formatted.

User memory is formatted in "Overall Reset" mode with either the "Format User Data" or the "Format TO Data" softkey. For information on selecting "Overall Reset" mode, refer to Section 11.

$$\text{Number of D memories} = \frac{\text{Memory configuration [BYTES]}}{\text{Number of TO parameters *4}}$$

© Siemens AG 1990 All Rights Reserved 6ZB5 410-0EN02

14, 15	Password protected R parameters	Active at once
16, 17	Keyswitch protected R parameters	Active at once

Default value	Lower input limit	Upper input limit	Units
0	0	999	-

Appropriate specifications NC MD 14/15 and/or 16/17 make it possible to protect general and channel-specific R parameters. Channel-specific specifications apply to all channels. The parameter area defined in MD 14-15 is password-protected, the area defined by MD 16-17 is protected via the keyswitch. The latter is effective only when bit 3 of NC MD 5005 is "1". If the areas defined in MD 14-15 and in MD 16-17 overlap, the latter has priority.

18	Zero offset group	Active -

Default value	Lower input limit	Upper input limit	Units
1	0	10	-

MD 18 is of significance in conjunction with Siemens cycle L960 only, and may not be modified.

19	Next cutting edge (P number)	Active at once

Default value	Lower input limit	Upper input limit	Units
0	5	32	-

MD 19 specifies the P location (in TO memory) containing the pointer (D number) to the next cutting edge in a multi-cutter tool.

The pointer must be in P locations 5-32. The default value is 10 (corresponding to P10).

© Siemens AG 1990 All Rights Reserved 6ZB5 410-0EN02

20	Basic angle for nutating head		Active in next block
Default value	Lower input limit	Upper input limit	Units
0	0	180 000	10^{-3} degrees

Please observe NC MD 5010 (5D tool length compensation).

23	Number of buffer pairs for CP 231-A		Active on Power on
24	Number of buffer pairs for CP 315-1		Active on Power on
25	Number of buffer pairs for CP 315-2		Active on Power on
Default value	Lower input limit	Upper input limit	Units
16	1	16	–

See the section entitled Computer Link for details.

26	AP useful data length for CP 231-A		Active on Power on
27	AP useful data length for CP 315-1		Active on Power on
28	AP useful data length for CP 315-2		Active on Power on
Default value	Lower input limit	Upper input limit	Units
234	0	256	characters

See the section entitled Computer Link for details.

© Siemens AG 1990 All Rights Reserved 6ZB5 410-0EN02

30	Number of Processing Memory Sectors (as from Software Version 2.1)		30
Default value	Lower input value	Upper input value	Units
10	5	1000	Sector

Active: on POWER ON

When "Working from external", the part program is read into a circular buffer which executes the program at the same time. The circular buffer is part of the part program memory. The size of the circular buffer is defined in NC MD 30 as number sectors
(1 sector = 507 bytes).

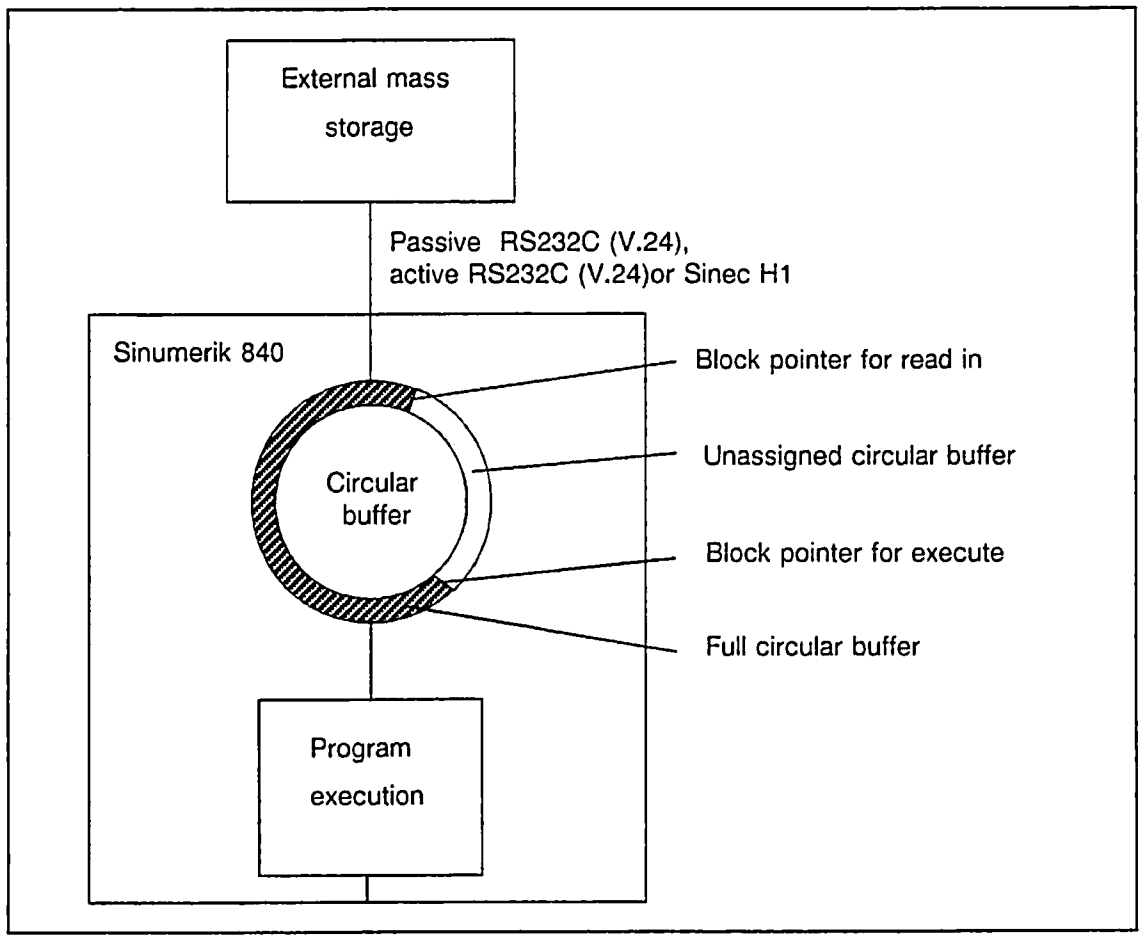

If the specified sectors are not available to the circular buffer on NC Start (either occupied by part programs or part program memory too small), the circular buffer is reduced to the maximum possible number of sectors by the control.

Additional machine data: (MD 130*, MD 5148-5152, option bit)

If processing is to take place from more than 1 interface, an appropriate area is reserved for each of these interfaces.

© Siemens AG 1990 All Rights Reserved 6ZB5 410-0EN02

100 - 130	Positions 2 to 32 of the feedrate override switch		Active at once
Default value	Lower input limit	Upper input limit	Units
see below	0	150	%

Use can be made of a feedrate override switch with up to 32 positions. The percent figures may be allocated as required except the far left (i.e. first) position, which is always 0 %. In contrast to position 1, FST (Feed Stop) is not shown in the on-screen channel status field when 0 % is allocated to another switch position.

Allocations exceeding 150 % are possible, but 150 % is set in the NC as internal limiting value.

Default values:

1, 2, 4, 6, 8, 10, 20, 30, 40, 50, 60, 70, 75, 80, 85, 90, 95, 100, 105, 110, 115 and 120; the remaining NC MD (NC MD 122 to 130) are set to zero.

131 - 146	Positions 1 to 16 of the spindle override switch		Active see below
Default value	Lower input limit	Upper input limit	Units
see below	50	150	%

Active: when all channels of the mode group are in STOP status.
Percentages may be assigned as needed to the max. 16 spindle override switch positions.

Default values:

50, 55, 60, 65, 70, 75, 80, 85, 90, 95, 100, 105, 110, 115, 120, 120.

© Siemens AG 1990 All Rights Reserved 6ZB5 410-0EN02

147 - 154	Positions 1 to 8 of the rapid traverse override switch		Active at once
Default value	Lower input limit	Upper input limit	Units
see below	0	100	%

Default values:

1, 10, 50, 100, 0, 0, 0, 0.

Rapid traverse override must be activated via PLC interface signals. Also refer to the description of NC MD 5004, bit 4.

155	Sampling interval for position controller (up to Software Version 1)		Active on Power on
Default value	Lower input limit	Upper input limit	Units
8	4	40	1/2 ms

The sampling interval is the interval at which the control forwards a new setpoint speed to the axes. Observe NC MD 160 carefully. Refer to Section 5.8.

155	Position controller basic clock pulse (as from Software Version 2)		Active on Power on
Default value	Lower input limit	Upper input limit	Units
8	4	40	Multiple off drive basic cycle time

The servo clock pulse is entered in MD 155 in multiples of 0.5 ms.

MD 155 x MD 168 x 62.5 µs = drive basic clock pulse

The sampling interval is defined as the time after which the control outputs a new setpoint speed to the axes. For axes or spindles, this NC MD can be additionally influenced, i.e. slowed down by means of a multiplier (NC MD 1396* and 466*).

© Siemens AG 1990 All Rights Reserved 6ZB5 410-0EN02

156	OFF delay for servo enable		Active on Power on
Default value	Lower input limit	Upper input limit	Units
200	0	1 000	ms

The enable signal for the speed controller (servo enable) on the measuring circuit is removed when the programmed delay time has elapsed. There is a separate servo enable signal on the measuring circuit for each axis; the control supplies these signals on a mode group basis.

The programmed delay time has the following effects:

1. Once the interpolator has reached the programmed position, the clamping tolerance (MD 212*) is activated when the delay time has elapsed. The following error must therefore be smaller than the clamping tolerance at this instant. The delay must be chosen so that it is possible to reduce to zero the largest possible following error (rapid traverse). In the event of an error, the servo enable signal is revoked on the measuring circuit and alarm 112* (zero-speed monitoring) activated.

   This applies only when NC MD 372* (zero-speed monitoring delay) is 0.
2. Delay for removal of the servo enable signal on the measuring circuit following "EMERGENCY STOP" and other errors resulting in immediate shutdown of the axes (e.g. contour monitoring).
3. Delay for removal of the servo enable signal on the measuring circuit when the PLC revokes the servo enable for an axis.

Note:

MD 1224* is valid on an axis-specific basis.

157	Types of control for standard cycles		Active -
Default value	Lower input limit	Upper input limit	Units
see below	-	-	-

		Identifier	Software version	Entry in MD 157
SINUMERIK	840T	41	2.1	4121
"	840M	42	2.1	4221

MD 157 is loaded by the NC software, and may **not** be changed by the operator. It is used by the standard cycles, i.e. measuring cycles for the relevant control.

© Siemens AG 1990 All Rights Reserved 6ZB5 410-0EN02

160	Interpolation to position control ratio		Active on Power on
Default value	Lower input limit	Upper input limit	Units
4	3	32	-

In order to compensate for the fact that a machine's axes frequently differ in dynamic response, the SINUMERIK 840 has been designed so that the operator can specify the ratio of interpolation to position control (sampling interval = MD 155). The interpolation time is the product obtained by multiplying the contents of MD160 with the contents of MD155.
For example, if MD160 is 4 and MD155 is 8, then the interpolation time is 16 ms. The interpolation time may lie in the range from 6 ms to 59.5 ms. Refer to Section 5.8.

168	Drive basic cycle time (as from Software Version 2.1)		Active on Power on
Default value	Lower input limit	Upper input limit	Units
8	2	32	62.5 µs

MD 168 is set as the first MD. MDs 155 + 160 are dependant on MD 168, i.e. the input resolution of MD 155 is determined by MD 168.

Permissible values:

2	→	125 µs
4		250 µs
8		500 µs
16		1000 µs
32		2000 µs

If the machine data contains a value for the drive basic cycle time which is outside the permissible range, the NC software automatically enters the default value 8 (500 µs) during start up. The value is automatically entered in the machine data.

© Siemens AG 1990 All Rights Reserved 6ZB5 410-0EN02

200	Serial interface from PLC		Active on Power on
Default value	Lower input limit	Upper input limit	Units
1	1	2	-

In DB 37, the PLC can input and output NC data over the serial interface (20 mA current loop or RS 232 C) specified in NC MD 200 (for additional details, please refer to Part 1 of the Interface Description). The default value (1) relates to the interface on the interface CPU. The function is enabled for the PLC operating system over bit 7 of the PLC MD 6026.

NC MD 200 can be overwritten with FB 62 as long as the interface is not active.

The second interface is permitted in conjunction with option C62 only.

208	Maximum tool wear P5, P6 (L1, L2)		Active at once
209	Maximum tool wear P7 (diameter)		Active at once
Default value	Lower input limit	Upper input limit	Units
999 999	0	999 999	0.01 units (IS)

NC MD 208 and 209 can be used to restrict the maximum value in the tool offset wear memory. Specification of 999 999 limits the maximum entry in tool wear memory to 9.99999 units.

Entries made via the Input and Edit keys are subjected to a limit check.

© Siemens AG 1990 All Rights Reserved

210	Number of TO areas		Active - see below
Default value	Lower input limit	Upper input limit	Units
1	1	4	-

Note

The TO memory can be subdivided into as many as four TO areas for pallet changing or dual-slide machines, the advantage being that the individual TO areas can be invoked for the various channels over D-numbers D0 to Dx, i.e. the slides on a dual slide machine can interchange programs, as both tool turrets can be referenced over D-numbers D0 to D8.
It may prove practical as a protective measure to prevent certain channels from accessing specific TOs.

The number of areas is specified in NC MD 210. The number of TO areas is limited to between 1 and 4. One TO area is provided when a value of 0 is entered. If the specified value exceeds 4, it is set to 4 internally and alarm 47 triggered.

The limits of the TO areas are defined by specifying the TO start numbers in NC MD 211 to 214. The last TO area extends from the last value specified in NC MD 211 - 214 to the maximum tool offset number (observe NC MD 13 and 104x).

Note carefully

A modification does not become effective until user memory is formatted. In "Overall Reset" mode, user memory is formatted with the "Format User Data" or "Format TO Data" softkey. For detailed information on invoking the "Overall Reset" mode, refer to Section 11.

© Siemens AG 1990 All Rights Reserved 6ZB5 410-0EN02

211	**TO start no. for TO area 1**	Active same as MD 210
212	**TO start no. for TO area 2**	Active same as MD 210
213	**TO start no. for TO area 3**	Active same as MD 210
214	**TO start no. for TO area 4**	Active same as MD 210

Default value	Lower input limit	Upper input limit	Units
see below	1	809	–

Default value: 211 = 1, 212, 213, 214 = 0

The data location numbers for TO areas 1 to 4 must be given in ascending order. Only one TO area will be set internally and alarm 47 triggered if this rule is not observed. The TO areas are allocated to the channels in NC MD 104*.

© Siemens AG 1990 All Rights Reserved 6ZB5 410-0EN02

Example

NC MD	13	10	Number of TO parameters	
NC MD	210	4	Number of TO areas	
NC MD	211	1	Start D no. for TO area	1
NC MD	212	30	Start D no. for TO area	2
NC MD	213	55	Start D no. for TO area	3
NC MD	214	150	Start D no. for TO area	4

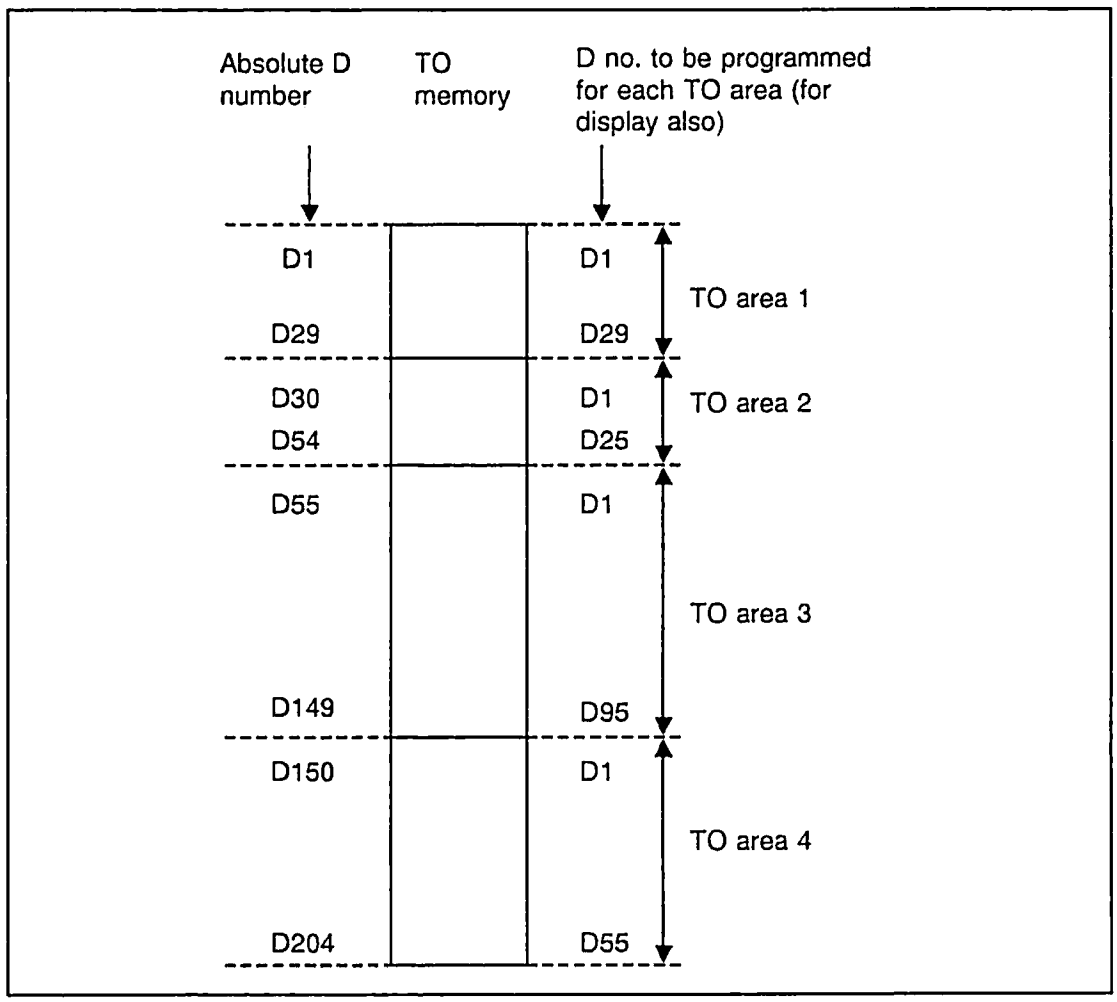

© Siemens AG 1990 All Rights Reserved 6ZB5 410-0EN02

228	**User menu for MDA**	Active see below
229	**User menu for JOG**	Active see below
230	**User menu for TEACH-IN**	Active see below
231	**User menu for AUTOMATIC**	Active see below
232	**User menu for JOG / REFPOINT**	Active see below

Default value	Lower input limit	Upper input limit	Units
0	0	1000	–

NC MD 228 - 232 can be used to preselect an arbitrary user menu to replace the standard basic system menu for the corresponding mode by entering the number of that menu in the appropriate NC MD.
A value of 0 preselects the standard basic system menu for the relevant mode or modes.

Note

Changes to NC MD 228 - 232 go into force the next time the corresponding mode is selected.

© Siemens AG 1990 All Rights Reserved 6ZB5 410-0EN02

250	Language switchover (as from Software Version 2)		Active on Power On
Default value	Lower input limit	Upper input limit	Units
0	0	1	–

As from Software Version 2, the SINUMERIK 840 can display two languages at option. The following entries are possible:

0 = Language 1
1 = Language 2

The following language combinations are available for Software Version 2:

Language 1	Language 2
German	English
German	French
German	Italian
German	Spanish
English	French
English	Italian
English	Spanish

You can check which combination has been ordered and implemented via the "Control info" softkey.

© Siemens AG 1990 All Rights Reserved 6ZB5 410-0EN02

260	Number of M function for selecting C axis operation valid as from Software Version 2		Active see below
Default value	Lower input limit	Upper input limit	Units
–1	–1	9 999	–

261	Number of M function for deselecting C axis operation valid as from Software Version 2		Active see below
Default value	Lower input limit	Upper input limit	Units
–1	–1	9 999	–

Active: when all channels of the mode group are in STOP status.

C axis operation is selected and deselected via M functions. The numbers of these M functions can be allocated on a customer-specific basis.

When allocating the numbers, make sure that there is no collision with other M functions. Generally, the following values are permissible:

0, 1, 2, 3, 4, 5, 17, 19, 30, 36, 37

Example

MD 260 = 123
MD 261 = 456

M1 = 123 L_F Selection of C axis operation for spindle 1
M3 = 456 L_F Deselection of C axis operation for spindle 3

© Siemens AG 1990 All Rights Reserved 6ZB5 410-0EN02

730-739	1st transformation, parameters 1 to 10 (as from Software Version 2)		Active on Power On
Default value	Lower input limit	Upper input limit	Units
0	-99 999 999	99 999 999	units (IS)

NC MD 740 to 749 2nd transformation, parameters 1 to 10
NC MD 750 to 759 3rd transformation, parameters 1 to 10
NC MD 760 to 769 4th transformation, parameters 1 to 10
NC MD 770 to 779 5th transformation, parameters 1 to 10
NC MD 780 to 789 6th transformation, parameters 1 to 10
NC MD 790 to 799 7th transformation, parameters 1 to 10
NC MD 800 to 809 8th transformation, parameters 1 to 10

The transformation parameters are required for the 2D/3D coordinate transformation. Refer to NC MD 5060 to 5069 and Section 12.4 for more detailed information.

© Siemens AG 1990 All Rights Reserved 6ZB5 410-0EN02

876 - 899	Leading axis ⇔ coupled axis		Active on Power on 1)
Default value	Lower input limit	Upper input limit	Einheiten
0	0	9	-

OPTION B85

The definition of these **coupled axis groupings** determines which axis is to be coupled when a leading axis is traversed in Jog mode or under program control.

1) Use of the Warm Restart function enables activation of other assignments without the necessity of a Power On. Refer to Section 12.3 for a detailed description of the Warm Restart function.

It is possible to define a maximum of 12 coupled axis groupings.

	Coupled axis	Leading axis	Coupled axis	Leading axis	Coupled axis	Leading axis	Coupled axis	Leading axis
NC MD	883	882	881	880	879	878	877	876
NC MD	891	890	889	888	887	886	885	884
NC MD	899	898	897	896	895	894	893	892

The number of the relevant axis must be entered as follows in the MD:

0 . . No axis
1 . . 1st axis (NC MD 5640 bit 7 = 1)
2 . . 2nd axis (NC MD 5641 bit 7 = 1)
. .
. .
. .

The **coupled motion combinations** (NC MD 5156 to 5182) determine how coupled axis groupings are to perform (coupled motion in same direction /in opposite directions) and the G functions with which they can be activated.

© Siemens AG 1990 All Rights Reserved 6ZB5 410-0EN02

For coupled axis groupings the following must be observed (alarm 84 is issued if an error occurs):

a. The axes in a coupled axis grouping must be in the same mode group.

b. The axes in a coupled axis grouping must have the same position control resolution and display resolution.

c. The axes in a coupled axis grouping must be of the same axis type:

Rotary axis	: MD 564*, 5
Actual value display modulo 360 °	: MD 560*, 7
Modulo programming for rotary axes	: MD 572*, 2
Rotary axis	: MD 560*, 3
Grounding to whole/half degrees	: MD 560*, 2
Auxiliary axis	: MD 572*, 0
Transverse axis	: MD 572*, 1

d. It must be possible to program the axes of one coupled axis grouping in the same channels MD 576* bits 7 to 0 and MD 580*, bits 7 to 0.

e. The axes in a coupled axis grouping must be available (NC MD 564* bit 7 = 1).

f. None of the axes of a coupled axis grouping is allowed to be a fictitious axis (NC MD 564* bit 6 = 0).

g. One leading axis can couple several axes.

Example:

	Coupled axis	Leading axis	Coupled axis	Leading axis	Coupled axis	Leading axis	Coupled axis	Leading axis
NC MD	883	882	881	880	879	878	877	876
	0	**0**	**6**	**1**	**5**	**1**	**4**	**1**

© Siemens AG 1990 All Rights Reserved 6ZB5 410-0EN02

h. The leading axis of a coupled axis grouping **cannot** at the same time be the coupled axis of the same grouping (observe also NC MD 5156 to 5188).

	Coupled axis	Leading axis	Coupled axis	Leading axis	Coupled axis	Leading axis	Coupled axis	Leading axis
NC MD	883	882	881	880	879	878	877	876
	0	**0**	**0**	**0**	**3**	**2**	**2**	**1**

not possible

i. The leading axis of a coupled axis grouping can also be the coupled axis of another grouping (observe also NC MD 5156 to 5183).

j. A leading axis **cannot** couple itself.

	Coupled axis	Leading axis	Coupled axis	Leading axis	Coupled axis	Leading axis	Coupled axis	Leading axis
NC MD	883	882	881	880	879	878	877	876
	0	**0**	**0**	**0**	**0**	**0**	**1**	**1**

k. A coupled axis can be coupled by several leading axes, if the leading axes are in other coupled axis groupings and these coupled axis groupings are not active at the same time.

The definition of the coupled axis groupings can be changed with warm restart without POWER ON (see Section 12.3 for a more detailed description of warm restart).

© Siemens AG 1990 All Rights Reserved 6ZB5 410-0EN02

8.3 Channel-specific MD (channel data)

100*	Machine data for control configuration		Active on Power on
Default value	Lower input limit	Upper input limit	Units
1	-	-	-

MD 1000 must be set to "1" (default).

Gaps are not allowed in MD 100*. If an error occurs, alarm 79 "Mode group no. of channel invalid" is issued.

Example

1000 1 1001 2
1002 0 1003 0 } → allowed

1000 1 1001 0
1002 2 1003 0 } → not allowed

104*	TO area for channel		Active at once
Default value	Lower input limit	Upper input limit	Units
1	1	4	-

The TO area for each channel is entered in NC MD 104*. The maximum value must accord with NC MD 210. A TO area must be allocated to each channel. Also refer to NC MD 210 to 214.

© Siemens AG 1990 All Rights Reserved 6ZB5 410-0EN02

106*	Number of the enabled program		Active in next block
Default value	Lower input limit	Upper input limit	Units
0	± see below	± see below	-

If 0 is entered, all programs are enabled in the first processing level for this channel. The program number must be entered if only a particular program may be started in a channel in the **first processing level.**
This may serve a practical purpose particularly when only a specific motion may be executed in a channel, i.e. with respect to loaders, tool palleting, and the like.

Main programs: 1 to +9999
Subprogram/cycle: –1 to –999
All main programs and subprograms: 0

108*- 122*	Reset state for G groups		Active in block prior to decoding
Default value	Lower input limit	Upper input limit	Units
see below	see table of input values	see table of input values	-

The reset state for G groups 1, 3, 6, 8, 12 and 15 may be defined on a channel-specific basis. Only those G functions shown in the table below may be specified in NC MD 108* to 122* for the relevant G group.
The reset state for G group 9 (G70/G71) is defined together with the input resolution in NC MD 5002.

	Default value		
	T	M	G group
108*	1	1	1
110*	18	17	3
112*	54	54	6
114*	64	60	8
116*	0	0	-
118*	95	94	12
120*	150	150	15
122* 1)	0	0	20

1) As from Software Version 2

© Siemens AG 1990 All Rights Reserved 6ZB5 410-0EN02

Table of input values

De-fault	NC MD for reset state		G group																
G01	108*		0				G13	G12	G08	G35	G34	G33	G03	G02	G11	G10	M/T G01	G00	
			1															G09	
G18-T G17-M	110*		2												G16	G19	T G18	M G17	
			3													G42	G41	M/T G40	
			4															G53	
C54	112*		5												G57	G56	G55	M/T G54	
			6									G74	G92	G59	G58	G26	G25	G04	
G64-T G60-M	114*		7												G62	T G64	G63	T G60	
			8														G71	G70	
			9						G89	G88	G87	G86	G85	G84	G83	G82	G81	M/T G80	
			10													G68	G91	M/T G90	
G95-T G94-M	118*		11												G97	G96	T G95	M G94	
			12						G112	G111	G110	G48	G348	G248	G148	G347	G247	G147	
			13														G51	M/T G50	
G150	120*		14						G159	G158	G157	G156	G155	G154	G153	G152	G151	M/T G150	
			15										G135	G134	G133	G132	G131	G130	
			16										G235	G234	G233	G232	G231	G230	
			17										G335	G334	G333	G332	G331	G330	
			18										G935	G934	G933	G932	G931	G930	
0	122*		19															G171	0
			20																
			21														G176	G179	

Refer to the Programming Guide for a detailed description of G groups and G functions.

© Siemens AG 1990 All Rights Reserved 6ZB5 410-0EN02

130*	Serial interface for "Execution from external" (as from Software Version 2.1)		130*
Default value	Lower input limit	Upper input limit	Units
1	1, 2, 5	1, 2, 5	-

Machine data 130* is used to define which interface (RS232C (V.24), file transfer) is to be started for the relevant channel when using the "Execution from external" function.

Channel No. x = 0 → Channel 1
x = 1 → Channel 2
etc.

Interface 0: no interface

Interface 1-2: 1st -2nd RS232 C interface

Interface 5: file transfer

Note:

Only the first interface can be used for PLC programming (20 mA).

Additional machine data: (MD 30, MD 5148-5152, "Execution from external" option)

© Siemens AG 1990 All Rights Reserved 6ZB5 410-0EN02

8.4 Axis-specific MD 1 (axial data 1)

200*	Allocation of axis to actual-value port		Active on Power on
Default value	Lower input limit	Upper input limit	Units
see table	+0	03030003	-

Default value		
	T	M
2000	01010001	01010001
2001	01020002	01020002
2002	0	01030003
2003 . . 2011	0 . . 0	0 . . 0

© Siemens AG 1990 All Rights Reserved 6ZB5 410-0EN02

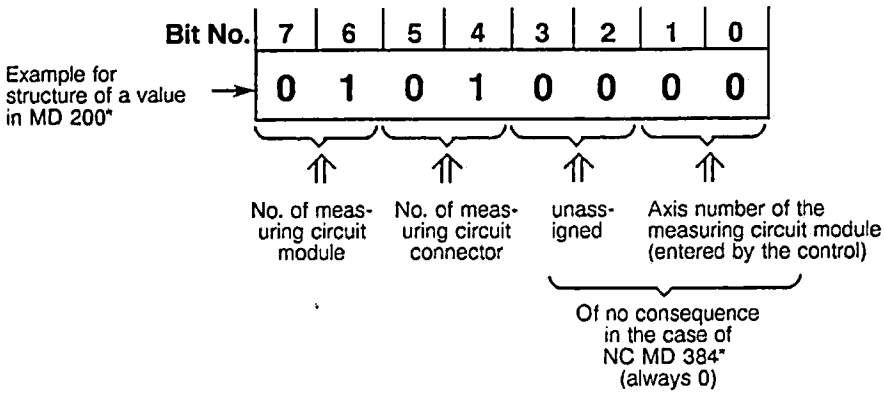

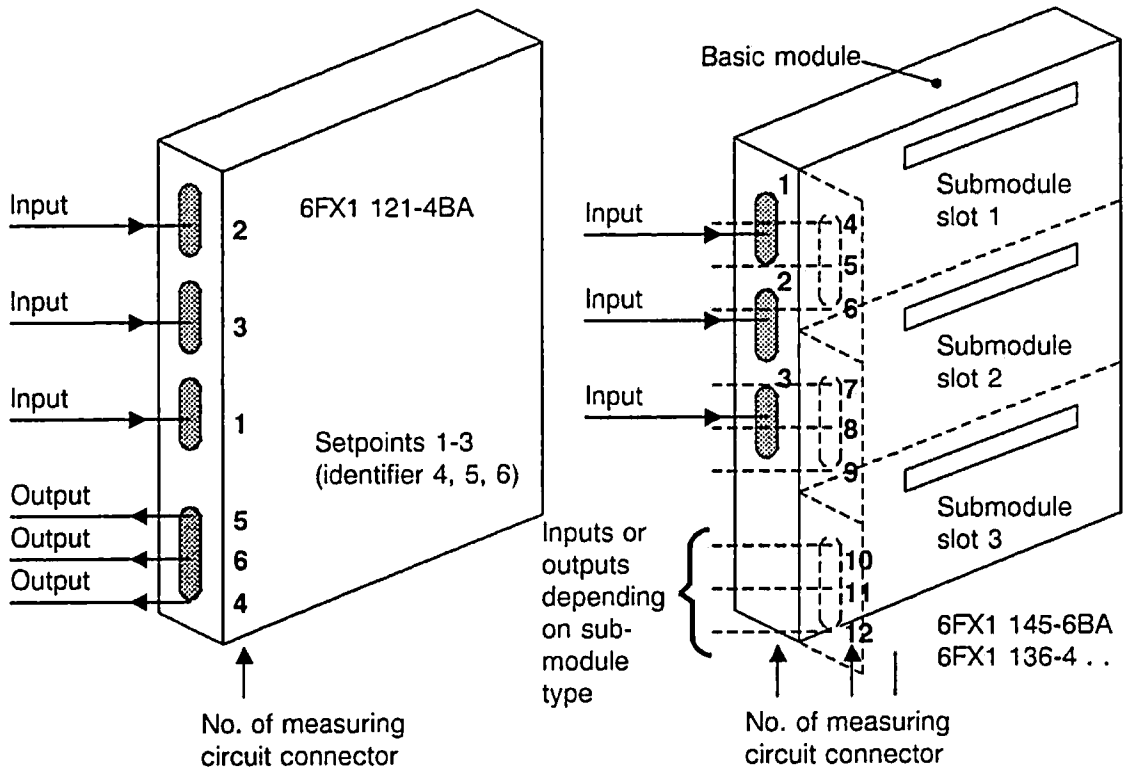

MD 200 specifies the measuring circuit module or input for incoming actual position values. All measuring circuit modules are interfaced to the same bus and are therefore numbered automatically from left to right by the software on Power On. There is no wiring block for these modules.
In the basic configuration, the 840 T has two axes.
NC MD 384* is used to define the setpoint outputs.

© Siemens AG 1990 All Rights Reserved 6ZB5 410-0EN02

204*	Coarse stop tolerance range		Active on NC Stop
Default value	Lower input limit	Upper input limit	Units
40	+0	16 000	units (MS)

The value defining the coarse stop tolerance range can be higher than that defining the fine stop tolerance range. Consequently, a block change to the next machining block will be initiated correspondingly sooner.
If this function is not required, it can be rendered ineffective by entering identical values in the machine data locations for coarse exact stop and fine exact stop.

The coarse stop tolerance range is effective in the following cases:
- G00
- Block preceding G04
- Block preceding setting data
- Block ahead of which only auxiliary functions have been programmed
- Single block without G60/G09
- Jog
- Incremental feed
- End of program

Note

The coarse stop tolerance range is not approached in continuous-path operation G64 (exception: G00 G64 → coarse exact stop). There is no secondary error as a result of a large number of consecutive positioning operations, as position control is not "deactivated" by the stop tolerance range; instead, the second block is processed before the end position of the first block is reached.

The current traversing path is now:
The remainder of block 1, block 2 and so on. If the axis stops for an instant, e.g. because another axis is about to move or because there is no axis movement in this program block, compensation is such that the following error is 0 and the axis is precisely positioned. Also refer to NC MD 208*.

© Siemens AG 1990 All Rights Reserved 6ZB5 410-0EN02

208*	Fine stop tolerance range		Active on NC Stop
Default value	Lower input limit	Upper input limit	Units
10	+0	16 000	units (MS)

A traversing movement is regarded as completed when the axis has reached setpoint position + - of the specified fine stop tolerance range.

If the setpoint is not within this range, the position control light remains on and the block is regarded as not having been completed.

Corrective action:

e.g. drift compensation (see Section 5).

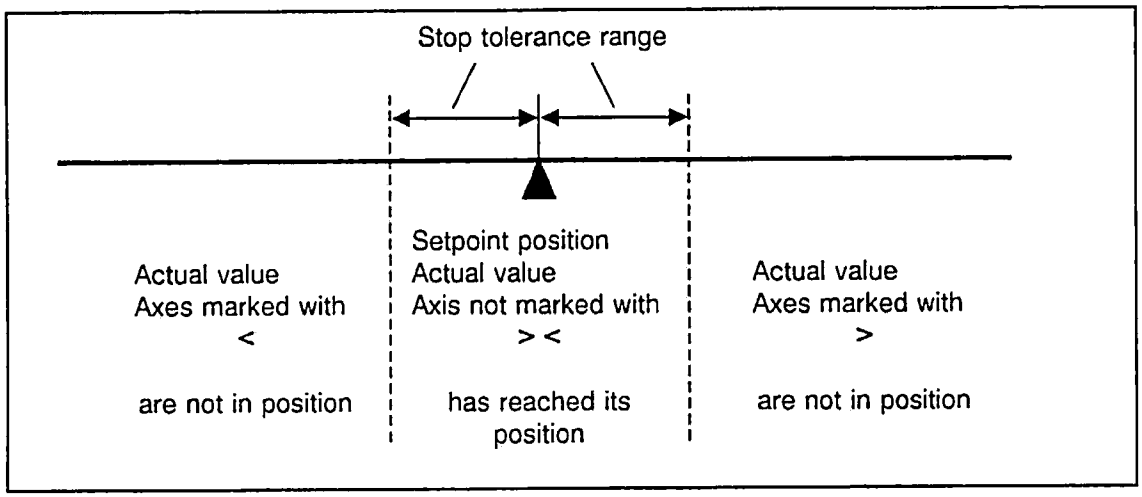

The fine stop tolerance range is in force for:

- G09/G60
- Block preceding G33

Note
In continuous-path operation (G64), neither the coarse nor the fine stop tolerance range is approached (exception: G00).

The 840 System has no position control light. Actual values are marked with < > in the machine display to indicate that an axis is not in position.

An example for the 840 T is shown at the right (X axis not in position, Z axis in position)

Actual value < X -12.560 Z 10.000

© Siemens AG 1990 All Rights Reserved 6ZB5 410-0EN02

212*	Zero-speed monitoring		Active on NC Stop
Default value	Lower input limit	Upper input limit	Units
100	+0	16 000	units (MS)

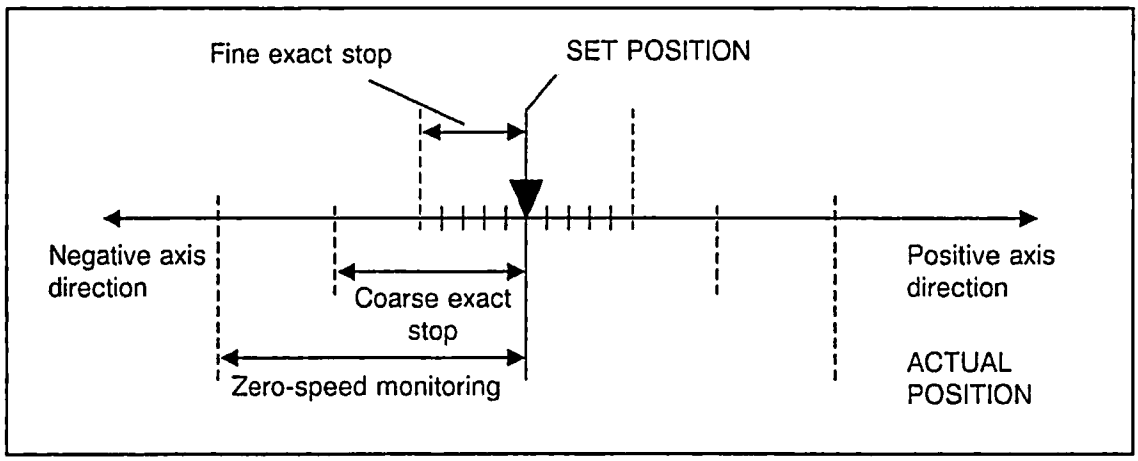

The NC monitors the position at zero speed (holding of position). If the zero-speed monitor is timed out after the waiting time for the position monitor (NC MD 156 / NC MD 372*) has elapsed, alarm 112* is issued.

The following situations may occur:

a) If the interface controller revokes the servo enable signal for an axis, the NC can no longer hold that axis in position. The interface controller must hold the axis in position itself by means of clamping. However, the clamped axis may be forced out of position as a result of mechanical forces.

b) The axis may be forced out of position as a result of major mechanical forces or faults in the drive.

The value for zero-speed monitoring must be **greater** than the **tolerance ranges for fine stop and coarse stop.**

© Siemens AG 1990 All Rights Reserved 6ZB5 410-0EN02

216*	Tolerance band for zero mark monitoring Valid up to Software Version 1		Active on NC Stop
Default value	Lower input limit	Upper input limit	Units
16	+0	16	-

The number of actual-value pulses between two zero marks are compared and alarm 144* issued if the difference is greater than the value in MD 216*.

Reactions to errors:

- Alarm 144* ("Zero mark monitoring") is displayed as warning
- The axis remains under closed-loop control
- The program is not stopped

An MD value $\geq$ 16 disables the monitor.

Note

Serves a practical purpose in conjunction with digital encoders without pulse multipliers.

© Siemens AG 1990 All Rights Reserved 6ZB5 410-0EN02

220*	Backlash compensation		Active on NC Stop
Default value	Lower input limit	Upper input limit	Units
0	±0	255	units (MS)

In the case of axes with indirect measuring systems, mechanical backlash results in corruption of the traversing path. When the direction is reversed, traverse is either shortened or extended by the amount of backlash, depending on the design.

Positive backlash (normal case)

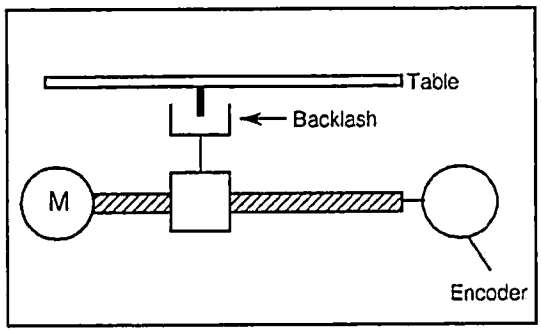

Actual encoder value ahead of real actual value (table): Too little table travel

Negative backlash

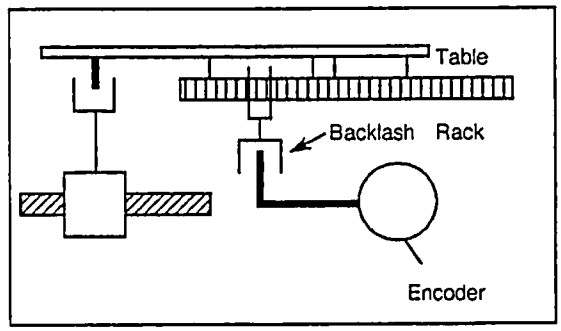

Real actual value (table) ahead of actual encoder value: Too much table travel

The compensation value (amount of backlash) entered must be positive for positive backlash and negative for negative backlash.
The control compensates the backlash specified in NC MD 220* (in all operating modes and in all interpolation modes) each time the relevant axis changes its direction of travel.

© Siemens AG 1990 All Rights Reserved 6ZB5 410-0EN02

224*	**Software limit switch 1 (positive direction)**	Active on NC Stop
228*	**Software limit switch 1 (negative direction)**	Active on NC Stop
232*	**Software limit switch 2 (positive direction)**	Active on NC Stop
236*	**Software limit switch 2 (negative direction)**	Active on NC Stop

Default value	Lower input limit	Upper input limit	Units
±99 999 999	±0	99 999 999	units (MS)

Default value For 224* and 232* + 99 999 999
For 228* and 236* - 99 999 999

A software limit switch may be used in addition to the customary range limit switch (hardware limit switch). The operator enters the absolute position of the positive range limit for each axis.

The software limit switches cannot fulfil their function correctly until the reference point has been approached and NC MD 560 * 5 has been set to "1".

The software limit switches are always approached at the speed defined in NC MD 1 unless a lower speed was selected in the current motion block. Deceleration to zero speed begins so far ahead of the software limit switch that the limit switch is reached with absolute accuracy but not overrun (in jog mode). The software limit switch can also be overrun under certain conditions (see NC MD 1100*).

© Siemens AG 1990 All Rights Reserved 6ZB5 410-0EN02

Customary travel limits

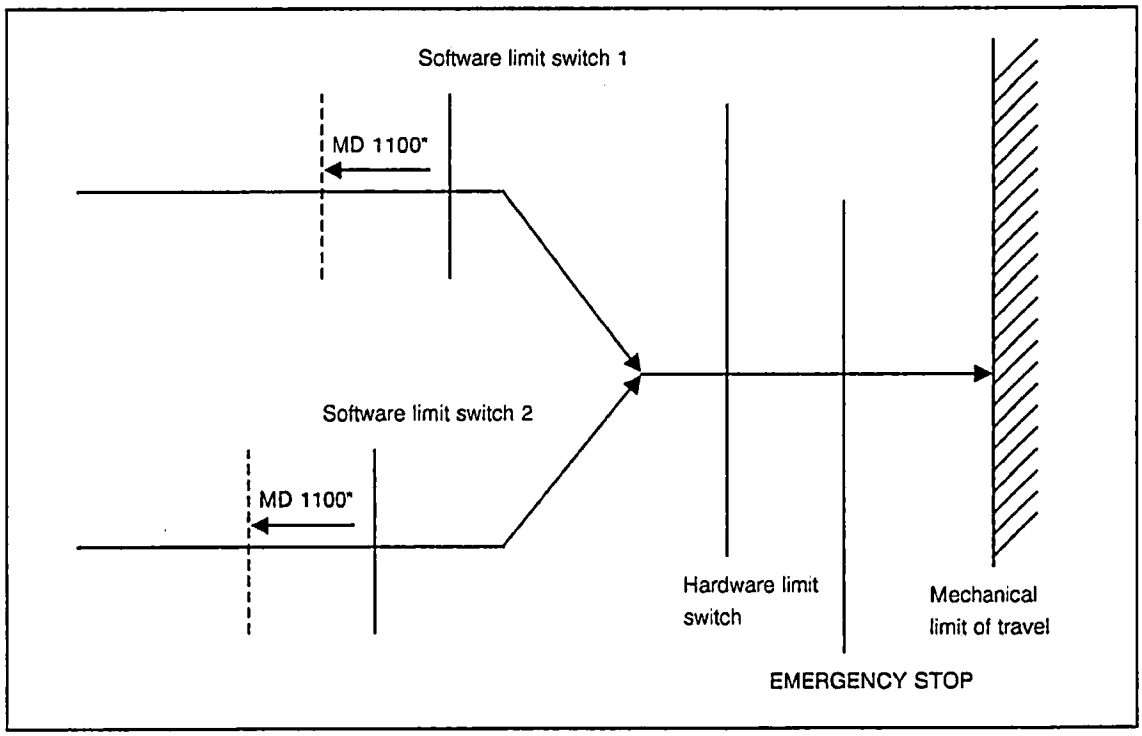

Note

When axes are traversed with interpolation, all axes are shut down upon reaching the limit of any one of the axes. Stopping without a contour violation, however, can be guaranteed only when bit 7 of NC MD 5003 ("No deceleration at limit switch") is not set, i.e. when the acceleration ramp is used for braking.

A second software limit switch position can be specified in a clockwise direction. The PLC selects either software limit switch 1 or 2 on the basis of an interface signal (refer to Part 1 of the Interface Description, DB32, DL m + 1, bit 1).

e.g. DB32 DL1 Bit 1 = 0 ..... 1st switch for 1st axis
Bit 1 = 1 ..... 2nd switch for 2nd axis

Sample application

Reduction of the permissible traversing range with a retracted tailstock.

© Siemens AG 1990 All Rights Reserved 6ZB5 410-0EN02

240*	Reference point value		Active on NC Stop
Default value	Lower input limit	Upper input limit	Units
0	+0	99 999 999	units (MS)

The difference between absolute machine zero and the fixed reference point is entered for the respective axis. These values are set as actual values for reference point approach (also refer to Section 5 for a detailed description of reference point approach).

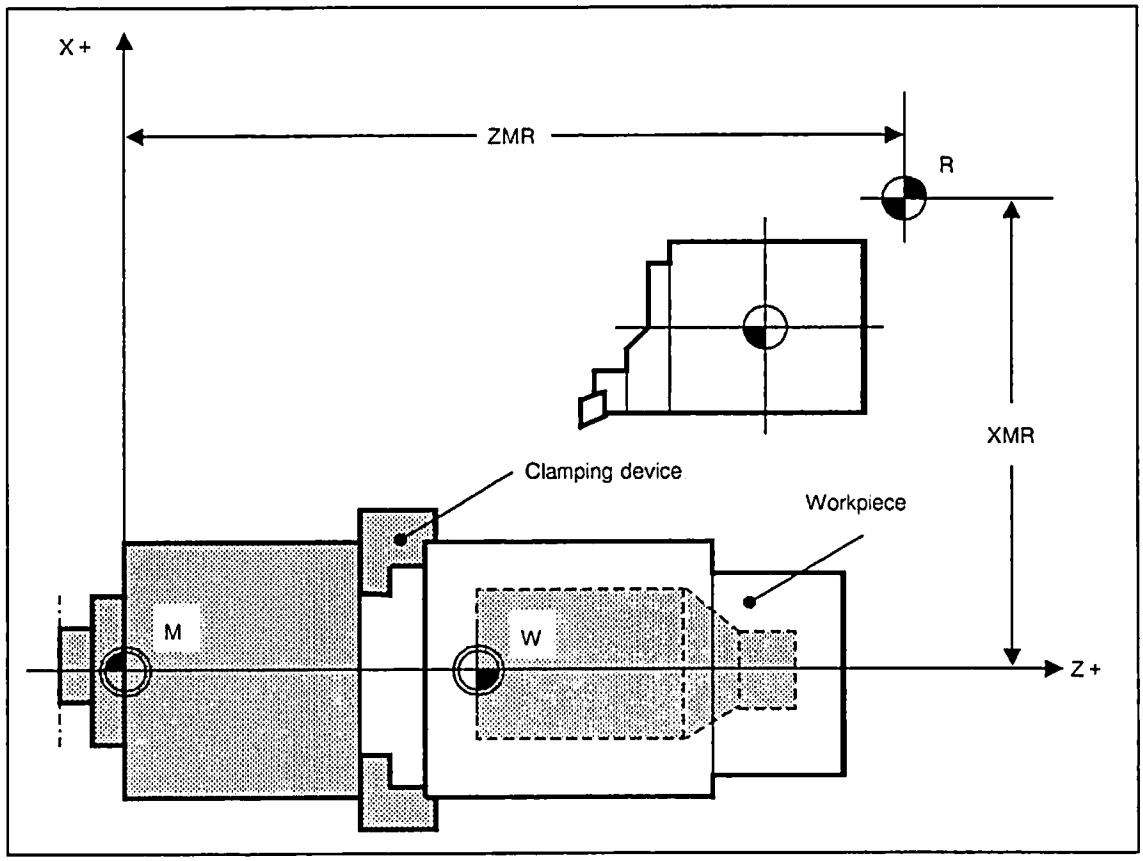

Example: Turning machine

M ... Machine zero
W ... Workpiece zero
R ... Reference point
XMR ... Reference point coordinate in X direction
ZMR ... Reference point coordinate in Z direction

© Siemens AG 1990 All Rights Reserved 6ZB5 410-0EN02

244*	Reference point shift		Active on NC Stop
Default value	Lower input limit	Upper input limit	Units
0	- 9999	9 999	units (MS)

Reference point shift is used to shift the reference points of the measuring system. Instead of mechanical shifting or rotating of the measuring equipment (and thus of the "deceleration" cam), the reference point can be shifted electrically by up to ±9 999 units.
The reference point shift path is traversed at the cutoff speed (NC MD 284*), which must already have been reached at the operating cam (also see Section 5 for details on reference point approach).

The reference point shift is also effective in conjunction with automatic reference point approach (NC MD 560*, bit 6).

Without reference point shift, the reference point is 2000 units behind the first zero mark after the operating cam has become free again.

If the entry in NC MD 244* is **positive**, the axis travels the specified number of units beyond the normal reference point (2000 units beyond the zero mark) in a positive direction.

If the entry in NC MD 244* is **negative**, the axis, after overrunning the zero mark, travels to the value represented by the difference between 2000 units and the input value. In the event of a reference point shift of more than approximately 2000 units, the axis reverses its direction of travel (backlash on reversal).

Reference point pulse = zero mark from encoder

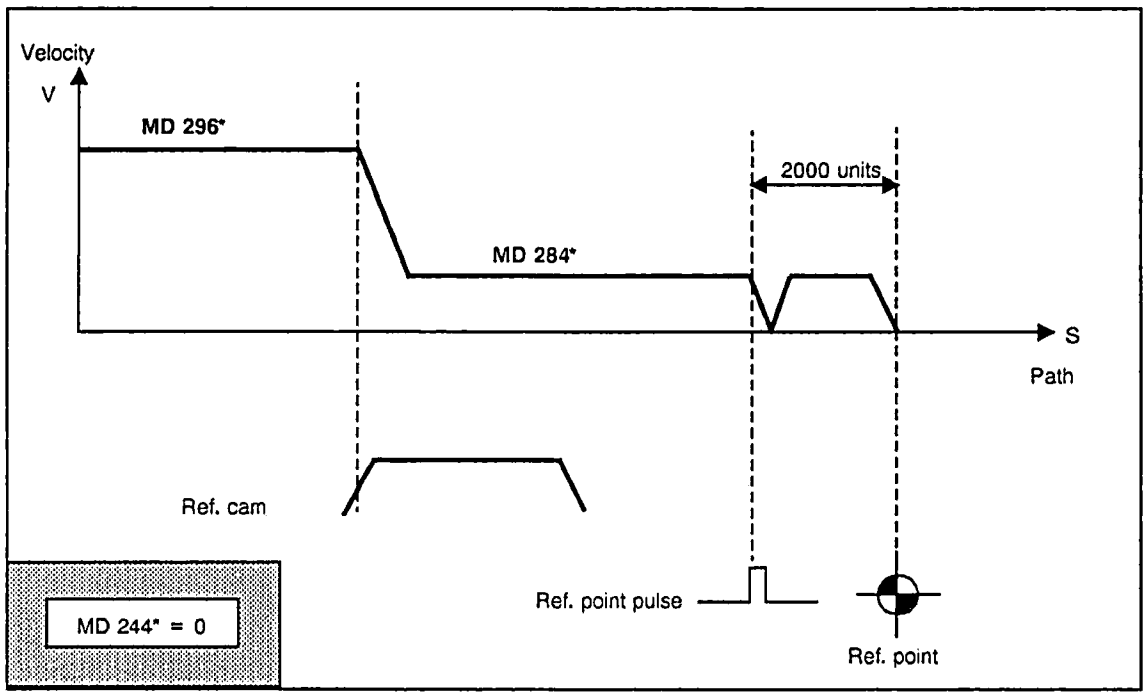

© Siemens AG 1990 All Rights Reserved 6ZB5 410-0EN02

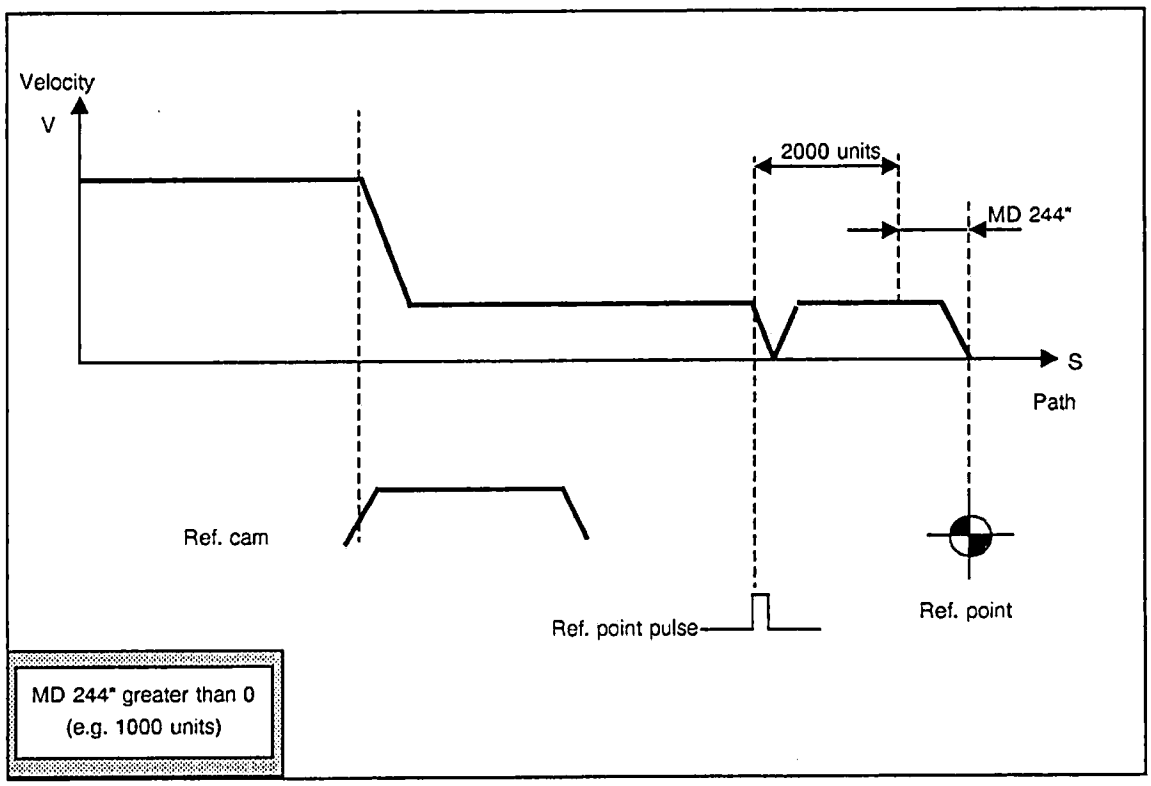

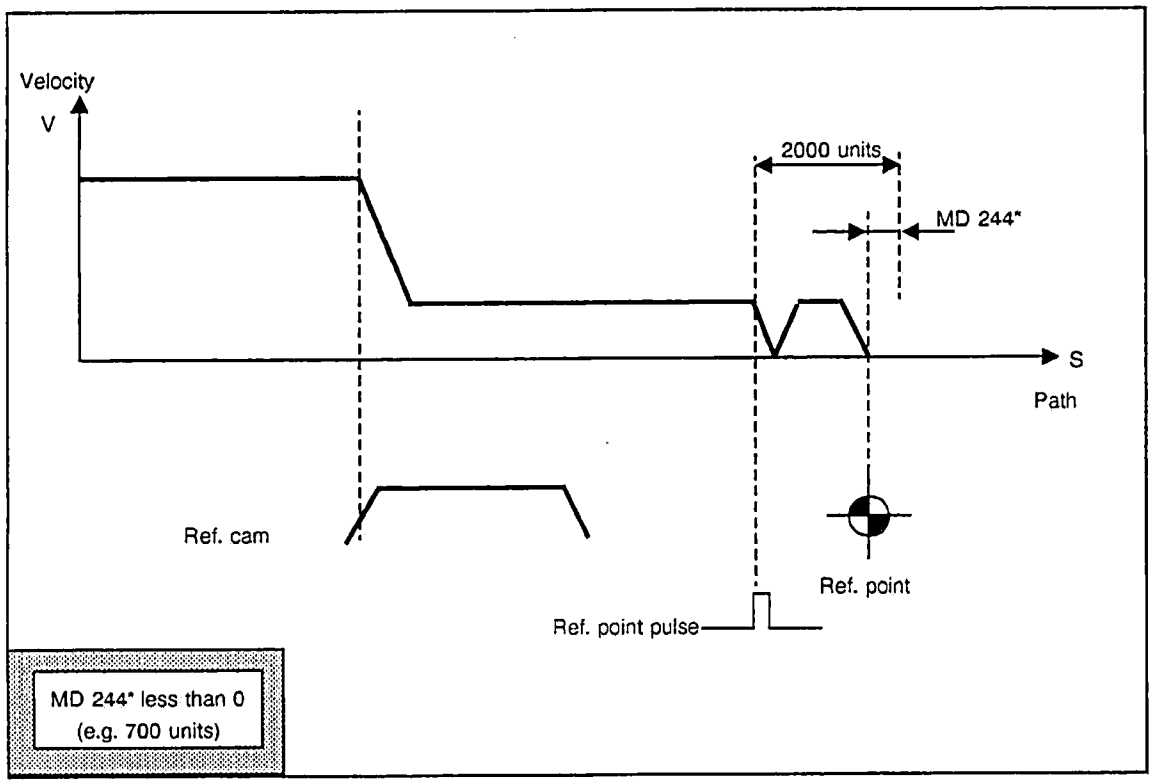

© Siemens AG 1990 All Rights Reserved 6ZB5 410-0EN02

252*	K_V factor		Active on NC Stop
Default value	Lower input limit	Upper input limit	Units
1 666	+0	10 000	0.01 s^{-1}

When specifying the K_V factor, attention must be paid to the fact that the gain factor for the entire position control loop is dependent on other controlled system parameters. Strictly speaking, a distinction must therefore be made between the "required K_V factor" (which is specified in NC MD 252*) and the "actual K_V factor" (obtained at the machine). Only when all control loop parameters have been correctly attuned to one another are these two K_V factors identical. The parameters in question are:

- Max. speed (MD 280*)
- Multgain (NC MD 260*)
- Tacho compensation on the speed controller
- Tacho-generator on the drive

An input value of 1 666 is equivalent to a K_V factor of 1.

Note

Axes which are to interpolate and perform a machining operation together must exhibit precisely the same gain in the position control loop (i.e. at the same speed they must exhibit the same following error = 45 degree inclination).

Any deviations will result in contouring errors!

Only axes which **never** contribute to continuous-path operation may be defined with different values.
The actual K_V factor can be checked on the basis of the following error (in the Service displays). Note that the drift must be compensated before carrying out the check.

© Siemens AG 1990 All Rights Reserved 6ZB5 410-0EN02

260*	Multgain		Active on NC Stop
Default value	Lower input limit	Upper input limit	Units
2 400	+0	64 0001)	min/1000 units (MS)

The multgain factor is used to match the controlled system to the K_V factor specified in NC MD 252*. The multgain is a pure multiplier for the specified K_V factor, and should be used for **precision digital tacho-generator matching** in view of the very fine adjustment capabilities.
Following the correct entry or matching of the multgain, the K_V factor produced for the relevant axis must correspond precisely to the specified value.

Note

Matching of the actual K_V factor via NC MD 252* (K_V factor) is not to be recommended, as different input values would be obtained for the various axes despite identical gain in the position control loop.

$$\text{Multgain} = \frac{3 \times 10^7}{V_{max}\left[\frac{1000\ \text{units}}{\text{min}}\right]} \times \frac{U_{max}\ [V]}{10\ [V]}$$

V_{max} ... Maximum axis speed NC MD 280*
U_{max} ... Set speed voltage, in volts, at maximum axis speed

Max. speed [1000 units / min]	Max. set speed		
	4 volts	8 volts	9 volts
24000	–	1000	1125
22000	–	1090	1227
20000	–	1200	1350
18000	–	1332	1500
16000	–	1500	1687
15000	–	1600	1800
14000	–	1714	1928
12000	–	2000	2250
10000	–	2400	2700
8000	–	3000	3375
6000	–	4000	4500
5000	2400	4800	5400
4000	3000	6000	6750
3000	4000	8000	9000
2000	6000	12000	13500
1000	12000	24000	27000
750	16000	32000	36000
500	24000	48000	–
375	32000	–	–
187	64000	–	–

1) Note regarding the input limit value
Multgain [NC MD 260*] x K_V factor s [NC MD 252*] < 3.9 x 108

© Siemens AG 1990 All Rights Reserved 6ZB5 410-0EN02

264*	Threshold value for drive errors		Active on NC Stop
Default value	Lower input limit	Upper input limit	Units
9600	+0	15 000	VELO

The specified setpoint speed is monitored; if it is too high (measuring-circuit and drive errors), alarm 156* is triggered.

The specified value must be greater than the highest maximum setpoint speed specified in NC MD 268*.

Recommended value

Approximately 20 % higher than the value in NC MD 268*

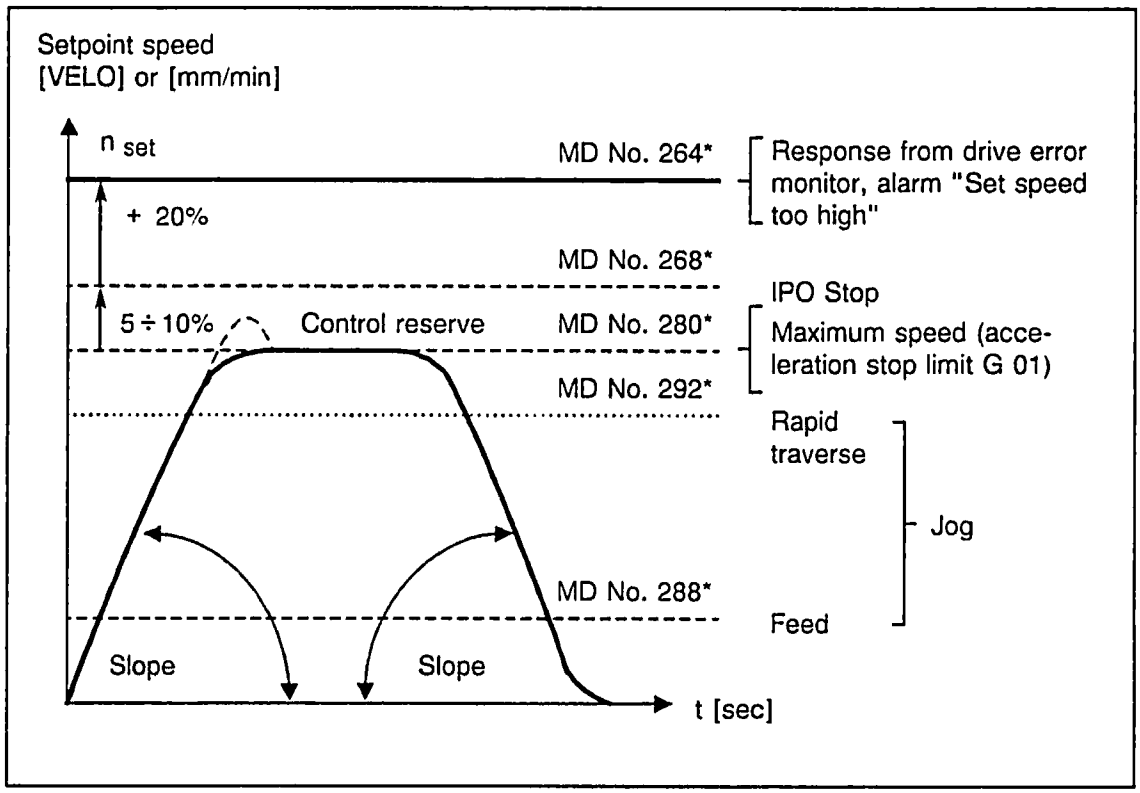

© Siemens AG 1990 All Rights Reserved 6ZB5 410-0EN02

268*	Maximum setpoint speed (IPO Stop)		Active on NC Stop
Default value	Lower input limit	Upper input limit	Units
8192	+0	8192	VELO

This entry defines the maximum voltage value to be output as setpoint speed. This value depends on the setpoint limiting values, if any, in the speed controller (normally 10 V). Alarm 104* (speed setpoint alarm limit) is triggered when the limiting value is exceeded.

Note carefully

It must be possible, however, to reach the maximum speed (rapid traverse) safely, i.e. tacho compensation must be such that the IPO Stop limit is not reached because of reading and adjustment inaccuracies resulting from fluctuations in speed during operation (e.g. maximum speed = 9.5 V setpoint speed).

272*	Drift compensation		Active on NC Stop
Default value	Lower input limit	Upper input limit	Units
0	+0	500	VELO

The temperature drift in analog electronic components (primarily in the motor control unit) causes the axes to wander from their set position until the following error produces a counter-setpoint that corresponds to the temperature drift.

Failure of the > < characters next to the actual values in the Machine display to disappear from the screen although the axes are at a standstill indicates that the following error brought about by the drift has reached a value that is so high that the axes can no longer be moved until the drift has been compensated.

Refer to Section 5 for details on drift compensation.

© Siemens AG 1990 All Rights Reserved 6ZB5 410-0EN02

276*	Acceleration		Active on NC Stop
Default value	Lower input limit	Upper input limit	Units
50	+0	4 000	10 000 units s^2 (IS)

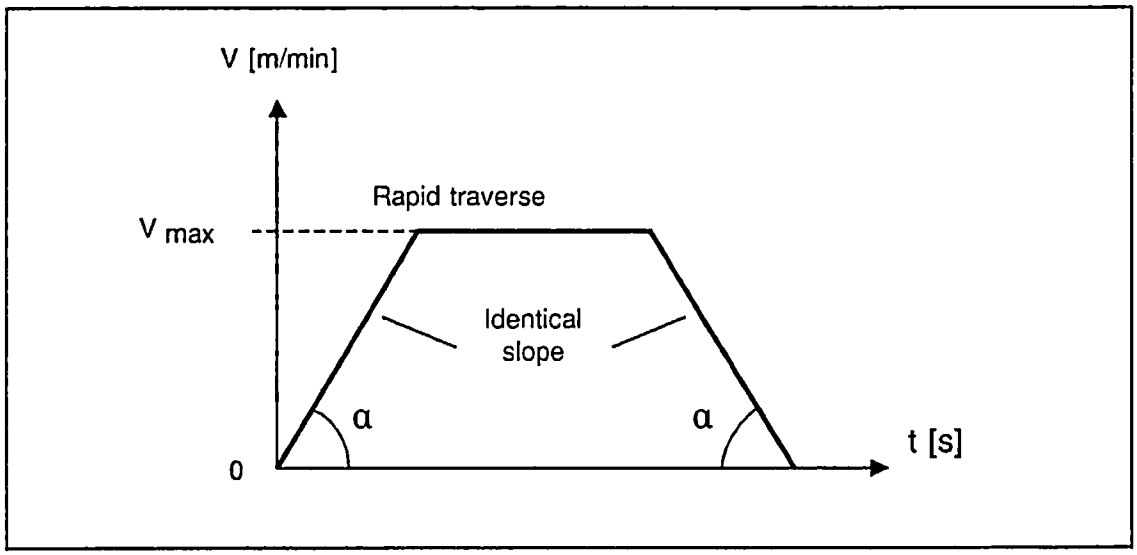

The acceleration values for the axes need not be identical. The control assumes the lowest acceleration value of the interpolating axes involved. These values also apply for deceleration (braking).

The value in NC MD 276* takes effect each time the axis is accelerated or decelerated (i.e. whenever there is a change in speed).

Exception

During reference point approach, the axis is decelerated as quickly as possible when the reference point is reached; the reference point cutoff speed (NC MD 284*) should therefore be as low as possible.
When an alarm is triggered, the relevant axis is decelerated as quickly as possible (also refer to the descriptions of the various alarms).

Note

Values of approximately 50 to 150 (= 0.5 to 1.5 m/s2) are customary for standard machines.
NC MD 276* must specify the angular acceleration in the case of rotary axes.

© Siemens AG 1990 All Rights Reserved 6ZB5 410-0EN02

280*	Maximum speed		Active on NC Stop
Default value	Lower input limit	Upper input limit	Units
10 000	+0	4 900 000	1 000 units/ min (IS)

NC MD 280* is used to define the maximum speed to which the axis can accelerate (**rapid traverse limit**). If rapid traverse G00 has been programmed, the axis traverses at the programmed speed. MD 280* is also used to compute the multgain. All speeds programmed or input relate to this speed.
The maximum permissible speed depends on the position control resolution, the input resolution and the interpolation time (refer to Section 5).

284*	Reference point cutoff speed		Active on NC Stop
Default value	Lower input limit	Upper input limit	Units
300	+0	4 900 000	1 000 units/ min (IS)

During approach to the reference point, the cutoff speed takes effect as soon as the reducing cam is reached, i.e. the "Deceleration" signal is active (see NC MD 244*).The feedrate override switch is not taken into account, except in the first position (0 %).
The specified cutoff speed must not exceed the maximum speed (NC MD 280*).
For a detailed description of reference point approach, refer to Section 5.

Recommended value

A reasonable upper limiting value would be 1 m/min, but values between 100 and 500 mm/min, depending on the K_V factor, would be preferable.

288*	Feedrate in jog mode		Active on NC Stop
Default value	Lower input limit	Upper input limit	Units
2 000	+0	4 900 000	1 000 units/ min (IS)

The specified value applies to travel in JOG mode with the feedrate override switch set to 100%.
The value in NC MD 288* must not exceed the maximum speed (NC MD 280*).

© Siemens AG 1990 All Rights Reserved 6ZB5 410-0EN02

292*	Rapid traverse in jog mode		Active on NC Stop
Default value	Lower input limit	Upper input limit	Units
5 000	+0	4 900 000	1 000 units/ min (IS)

The specified value applies to travel in JOG mode with the rapid traverse override key actuated and the rapid traverse override switch set to 100 %.

The value defined in NC MD 292* must not exceed the maximum speed (NC MD 280*).

The value in NC MD 292* is not used for programmed rapid traverse G00, which is defined by the maximum speed entered in NC MD 280*.

Recommended value

The selected value should be slightly lower than rapid traverse rate G00 to make allowance for the operator's response time.

296*	Reference point approach speed		Active on NC Stop
Default value	Lower input limit	Upper input limit	Units
100 000	+0	4 900 000	-

If the Direction key leading to the reference point is depressed in "Reference point approach" mode, the axis accelerates to the reference point approach speed. (Exception: The axis is already at the deceleration cam or automatic reference point approach has been selected; also refer to NC MD 244*).

The direction of reference point approach is specified in NC MD 564*.

The value entered in NC MD 296* must not exceed the maximum speed (NC MD 280*).

Also refer to Section 5 for details on reference point approach.

© Siemens AG 1990 All Rights Reserved 6ZB5 410-0EN02

300*	Incremental speed		Active on NC Stop
Default value	Lower input limit	Upper input limit	Units
500	+0	4 900 000	1 000 units/ min (IS)

The specified speed takes effect in incremental feed mode only (INC1 ... 10 000), and must not exceed the maximum speed (NC MD 280*).

When traversing with the handwheel in modes INC1 ... 10 000 or with the DRF function, the speed is determined exclusively by the handwheel.

304*	Interpolation parameter		Active in next block
Default value	Lower input limit	Upper input limit	Units
see table	+0	3	-

Default values		
	840T	840M
3040	1	1
3041	3	2
3042	0	3
3043 . . 3051	0 . . 0	0 . . 0

In the case of circular movements (G2/G3) and thread cutting (G33, G34, G35), the individual axes must be assigned an interpolation parameter:

0 = No interpolation parameter
1 = Interpolation parameter I
2 = Interpolation parameter J
3 = Interpolation parameter K

Standard MD: X axis I
Y axis ..... J
Z axis ..... K

Several axes may have the same interpolator name.

© Siemens AG 1990 All Rights Reserved 6ZB5 410-0EN02

Programming when using identical interpolator names

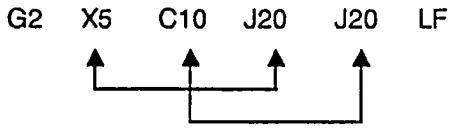

Allocation : 1st interpolator to 1st programmed axis
2nd interpolator to 2nd programmed axis

Axes without an interpolator name cannot execute circular or helical movements or perform thread cutting.

308*	Limiting frequency of C axis encoder (as from Software Version 2)		Active on Power on
Default value	Lower input limit	Upper input limit	Units
200	0	16 000	kHz

The limiting frequency of the C axis actual value encoder is entered in machine data 308*. The limiting frequency can be taken from the encoder manufacturer's specifications.

Pulses from the encoder may be lost when the limiting frequency is exceeded. Actual value acquisition will then not be correct and C axis operation is no longer possible. Alarm 1004* "Feedrate too high" is triggered.

Note

MD 308* is used only if a separate encoder is provided for C axis operation.
If not, the limiting frequency of the spindle encoder (MD 462*) is monitored also in C axis operation.

© Siemens AG 1990 All Rights Reserved 6ZB5 410-0EN02

312*	Feedforward factor (as from Software Version 2)	312*

Sign	Input limits	Default value	Units	Incr.
+	0 1000	0	0.1 %	1

Feedforward control is used to reduce the inaccuracy caused by the following error as much as possible.

For feedforward control, the set part position is multiplied by the feedforward factor and fed directly to the speed controller input. For static feedforward control, this value is fed directly to the position controller input while for dynamic feedforward control it is fed to the position controller input using a first order time-delay element after a delay specified in machine data 392*. No feedforward control is applied to the associated axis if feedforward factor 0 is entered in 312*.

Option B88 must be set to activate feedforward control.

The feedforward factor can be adapted to suit the rigidity of the machine and the resulting acceleration/deceleration of the axes. By using feedforward control, the following error is reduced by the amount of the feedforward factor.

Assuming a feedforward factor of 1000 at 0 speed, the following error will be approximately 0. However, it should be taken into account that this setting produces overshoots. In order to avoid this, a corresponding lower value is to be entered in MD 312* and the time constant for feedforward control must be entered in MD 392*.

316*	Reference point pointer compensation +	Active on Power On
320*	Reference point pointer compensation -	Active on Power On

Default value	Lower input limit	Upper input limit	Units
0	+0	249	MD offset *)

*) MD offset means 127→ instead of 6127

The NC activates leadscrew error compensation (SSFK) after reaching the reference point. The CNC must therefore be informed via MD 316* as to which of the 1000 possible compensation points represents the reference point for the axis in question.

Separate compensation curves for positive and negative traversing movements are available for direction dependent leadscrew error compensation, necessitating the use of two compensation pointers (MD 316* for " + " and MD 320* for " - "). The value refers to the compensation point which corresponds to the reference point (refer to Section 12 for a detailed description of leadscrew error compensation).

© Siemens AG 1990 All Rights Reserved 6ZB5 410-0EN02

324*	Distance between two leadscrew error compensation points		Active on Power On
Default value	Lower input limit	Upper input limit	Units
0	+0	32 000	units (MS)

The distance between two compensation points depends on:

- the permissible tolerance band
- the maximum gradient of the sumcheck error characteristic of the spindle/measuring system
- the maximum number of compensation points

(Also refer to Section 12 for details on leadscrew error compensation).

328*	Leadscrew error compensation value		Active on Power On
Default value	Lower input limit	Upper input limit	Units
see table	+0	100	units (MS)

The compensation value depends on the permissible tolerance band for the axis position. The value for the tolerance band or a slightly lower value is entered in order to make use of the full bandwidth for each compensation procedure (also see Section 12 for details on leadscrew error compensation). The compensation value entered in NC MD 328* must be less than that entered in NC MD 324*.
This MD applies both to rotary and linear axes.

332*	Tolerance band for contour monitoring		Active on Power On
Default value	Lower input limit	Upper input limit	Units
1 000	+0	16 000	units (MS)

The following error is proportional to the speed after acceleration or deceleration (i.e. in the steady state), so no fluctuations in the following error may develop during travel at constant speed, as this would result in contour deviations. Minor fluctuations in the following error which trigger control processes are, however, allowed.

The definition of a tolerance band is intended to prevent false tripping of the contour monitor due to slight fluctuations in speed caused by normal control processes.
The input value for the required tolerance band can be ascertained from the following family of curves (position control resolution of 0.5 µm):

For a detailed description, see Section 5.

© Siemens AG 1990 All Rights Reserved 6ZB5 410-0EN02

336*	Contour threshold speed		Active on Power On
Default value	Lower input limit	Upper input limit	Units
5	+0	1000 000	1000 units/ min (IS)

NC MD 336* is used to define the speed at which the contour monitor is to be activated. At speeds below this axis-specific threshold speed, the contour monitor remains inactive. The zero speed monitor checks for illegal axis movements when the axes are at rest (alarm 112*). For details, refer to Section 5.

344*	Rotary axis modulo value for leadscrew error compensation		Active on NC Stop
Default value	Lower input limit	Upper input limit	Units
0	±0	92 160 000	units (MS)

NC MD 344* must define the compensation value for a rotary axis, which is normally 360 000 (corresponding to one revolution of the rotating table).
When specifying values > 360 000, care must be taken that a corresponding number of leadscrew error compensation points are provided (for details on leadscrew error compensation, see Section 12).

360*	Axis valid in mode group		Active on Power On[1)]
Default value	Lower input limit	Upper input limit	Units
1	+1, 2	+1, 2	units (MS)

NC MD 360* is used to allocate the axes to the mode groups, i.e. to ensure that a channel will traverse only the axes in its mode group and not those of other mode groups. Within a mode group, several channels can process an axis successively, provided that axial synchronization of the "Block End Value" for that axis was carried out (NC STOP → NC START) if the axis was previously traversed by another channel.

1) The warm restart function enables the allocation of axes to another mode group without a hardware reset and without loss of the axes reference points (for a detailed description of the warm restart function, see Section 12).

© Siemens AG 1990 All Rights Reserved 6ZB5 410-0EN02

364*	Variable increment weighting pulses		Active on Power On
Default value	Lower input limit	Upper input limit	Units
1	1	16 000	–

368*	Variable increment weighting traversing pulses		Active on Power on
Default value	Lower input limit	Upper input limit	Units
2	1	16 000	–

The pulses coming from the digital measuring system and the position control resolution must be coordinated in order to produce a correctly closed position control loop.

NC machine data 364* and 368* can be used for this purpose.

The number of pulses of the encoder and the appropriate distance to go on the machine must be known for determining machine data 364* and 368* .

The following formula represents the relation between these machine data:

Position control resolution × MD 368* = Measuring system resolution × MD 364*

Schematic block diagram of the position control parameters :

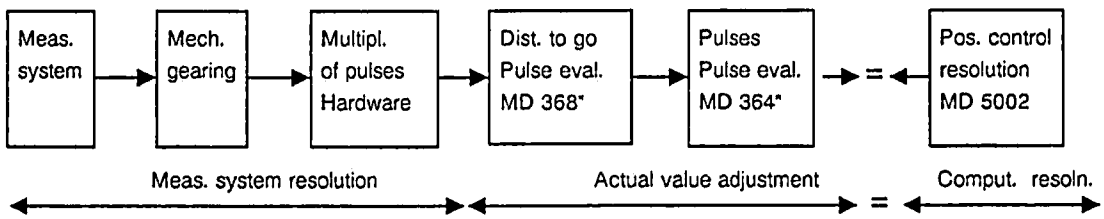

© Siemens AG 1990 All Rights Reserved 6ZB5 410-0EN02

The following parameters are used for adaption to the measuring system:

Parameter	Symbol	MD	Meaning
Position control resolution	b	1800* (Bit 0-3)	Internal computational resoultion of the control
Multiplier for EXE	f		(signifies e.g. a five-fold EXE multiplication of the pulses coming from the scale with the factor 5)
Grid constant	g		Period interval on a linear scale
Spindle pitch	l		Leadscrew pitch
Measuring system resolution	m		Maximum resolution of the measuring system. The value serves as a basis for determining the actual value adjustment factors.
Pulses per revolution	p		Number of pulses per revolution of the ROD encoder
Transmission ratio of mechanical gearing	r		Transmission ratio of a mechanical gearing which may be present between motor and ROD encoder
Factor for position control pulses	u	364*	Evaluation of position control resolution
Factor for actual value pulses	v	368*	Evaluation of measuring system resolution

The relation may be formulated as follows (see above) :

$$m \times u = v \times b$$

Determining the measuring system resolution and the variable increment weighting

- The ROD encoder is mounted directly onto the leadscrew:

$$m = \frac{l}{4p}$$

Example: $l = 10$ mm; $p = 2500$; $b = 0.5 \times 10^{-3}$ mm;

$$m = \frac{10}{4 \times 2500} \text{ mm} = 0.001 \text{ mm}$$

$$\frac{m}{b} = \frac{v}{u} \quad \frac{0.001 \text{ mm}}{0.5 \times 10^{-3} \text{ mm}} = \frac{2}{1}$$

MD 368* = 2; MD 364* = 1;

© Siemens AG 1990 All Rights Reserved 6ZB5 410-0EN02

- The ROD encoder is mounted onto the motor and the gearing is located between the motor and the leadscrew:

$$m = \frac{l}{4p} \times r$$

Example 1: l = 0.2 inch; p = 1000; b = 2 × 10^{-5} inch; r = 1:2 (i.e. 2 motor revolutions for 1 leadscrew revolution);

$$m = \frac{10}{4 \times 2500} \text{ mm} = 0.001 \text{ mm}$$

$$\frac{m}{b} = \frac{v}{u} \quad \frac{0.001 \text{ mm}}{0.5 \times 10^{-3} \text{ mm}} = \frac{2}{1}$$

MD 368* = 5; MD 364* = 4;

Example 2: Same values as above, except b = 0.5 × 10^{-3} mm;

$$\frac{m}{b} = \frac{v}{u} \quad \frac{25 \times 10^{-6} \text{ inch}}{0.5 \times 10^{-3} \text{ mm}} = \frac{508}{400}$$

MD 368* = 508; MD 364* = 400;

- A linear scale with EXE is used:

$$m = \frac{g}{4f}$$

Example: g = 0.02 mm; f = 10; b = 0.5 × 10^{-3} mm;

$$m = \frac{0.02 \text{ mm}}{40} = 0.0005 \text{ mm}$$

$$\frac{m}{b} = \frac{v}{u} \quad \frac{0.5 \times 10^{-3} \text{ mm}}{0.5 \times 10^{-3} \text{ mm}} = \frac{1}{1}$$

MD 368* = 1; MD 364* = 1;

- A rotary axis is used:

$$m = \frac{360 \text{ degrees}}{4pf}$$

Example: p = 18000; f = 5; b = 0.5 × 10^{-3} grad;

$$m = \frac{360 \text{ degrees}}{18000 \times 5 \times 4} = 0.001 \text{ degrees}$$

$$\frac{m}{b} = \frac{v}{u} \quad \frac{1 \times 10^{-3} \text{ deg.}}{0.5 \times 10^{-3} \text{ deg.}} = \frac{2}{1}$$

Should either of the values be greater than 16 000, both values must be divided by the same divisor (e.g. one exponent of 10).

© Siemens AG 1990 All Rights Reserved 6ZB5 410-0EN02

372*	Delay time for zero speed monitoring		Active on Reset
Default value	Lower input limit	Upper input limit	Units
200	0	1 000	ms

NC MD 372* is used to specify the amount of time that is to elapse before zero speed monitoring (NC MD 212*) is to be activated during the approach to position (digital zero). The time must be chosen so as to enable suppression of the largest possible following error. Failure to specify an appropriate delay time will trigger alarm 112*.
If NC MD 372* is 0, the value defined in NC MD 156 ("Servo enable cutoff delay") is taken as delay time for zero speed monitoring.

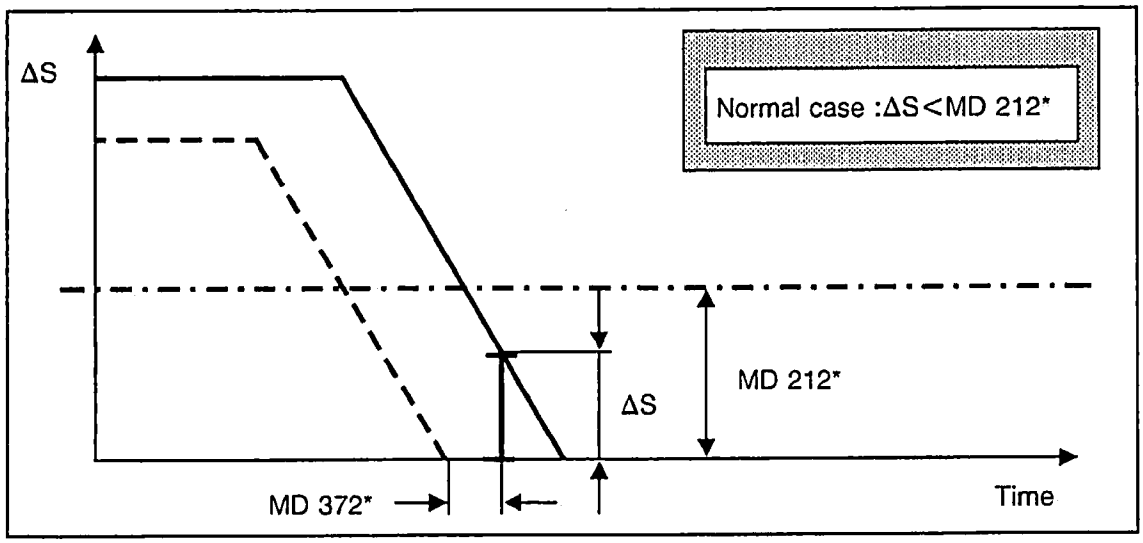

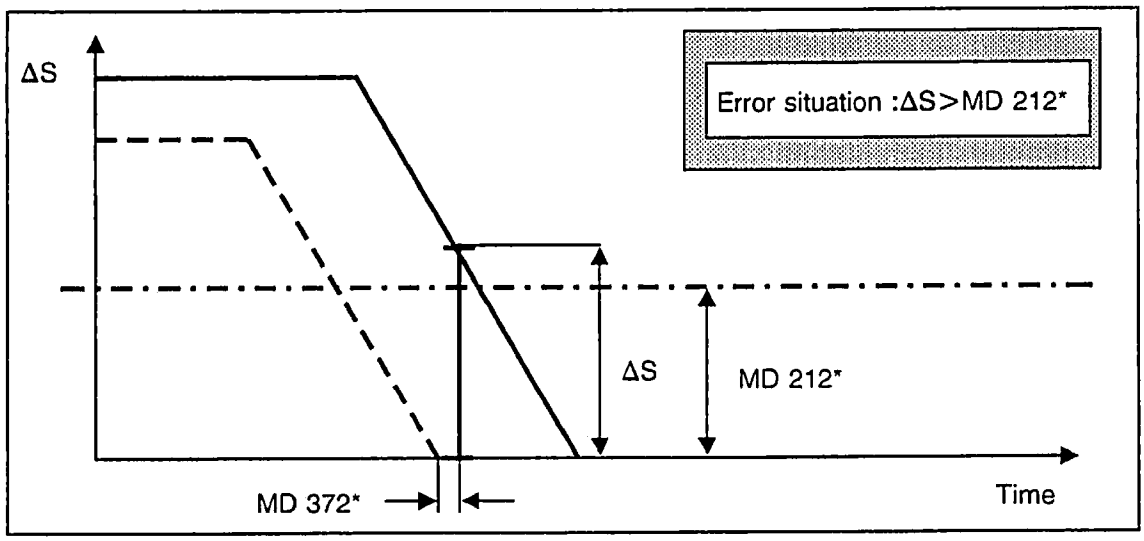

ΔS....Following error (contouring error)

© Siemens AG 1990 All Rights Reserved 6ZB5 410-0EN02

384*	Axis setpoint assignment		Active on Power On
Default value	Lower input limit	Upper input limit	Units
see table	+0	03 120 000	-

Default value		
	T	M
3840	01040000	01040000
3841	01050000	01050000
3842	0	01060000
3843 . . 3851	0 . . 0	0 . . 0

© Siemens AG 1990 All Rights Reserved 6ZB5 410-0EN02

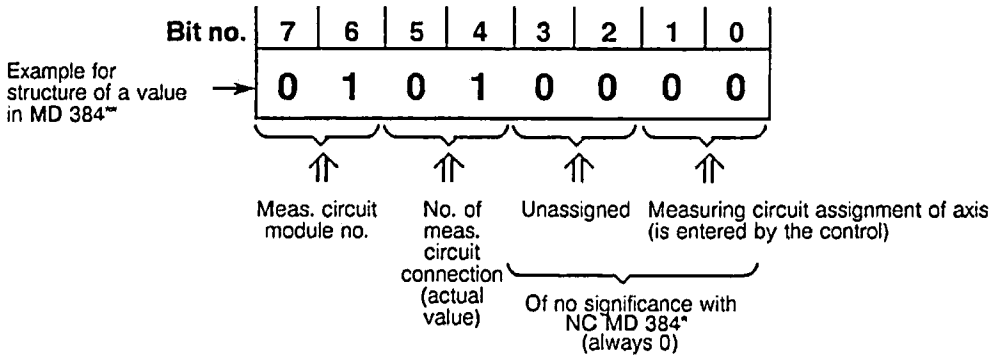

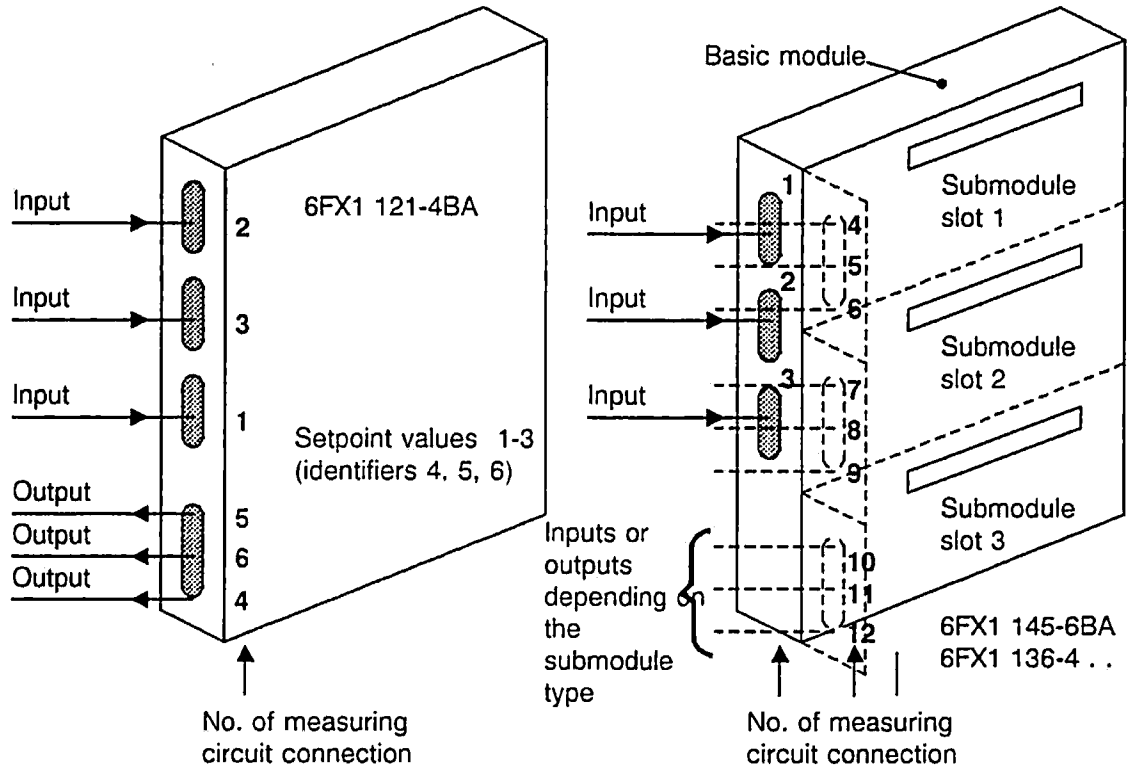

MD 384* determines at which measuring circuit module or which output the axis setpoint values are output (see also NC MD 200*).

© Siemens AG 1990 All Rights Reserved 6ZB5 410-0EN02

388*	Weighting factor for path conversion		Active on Power On
Default value	Lower input limit	Upper input limit	Units
0	+0	99 999 999	-

Hammering or kneading machines are used for manufacturing axially symmetrical parts using a forming process. The design of these machines sometimes necessitates traversing of an X' path although an X path was programmed.

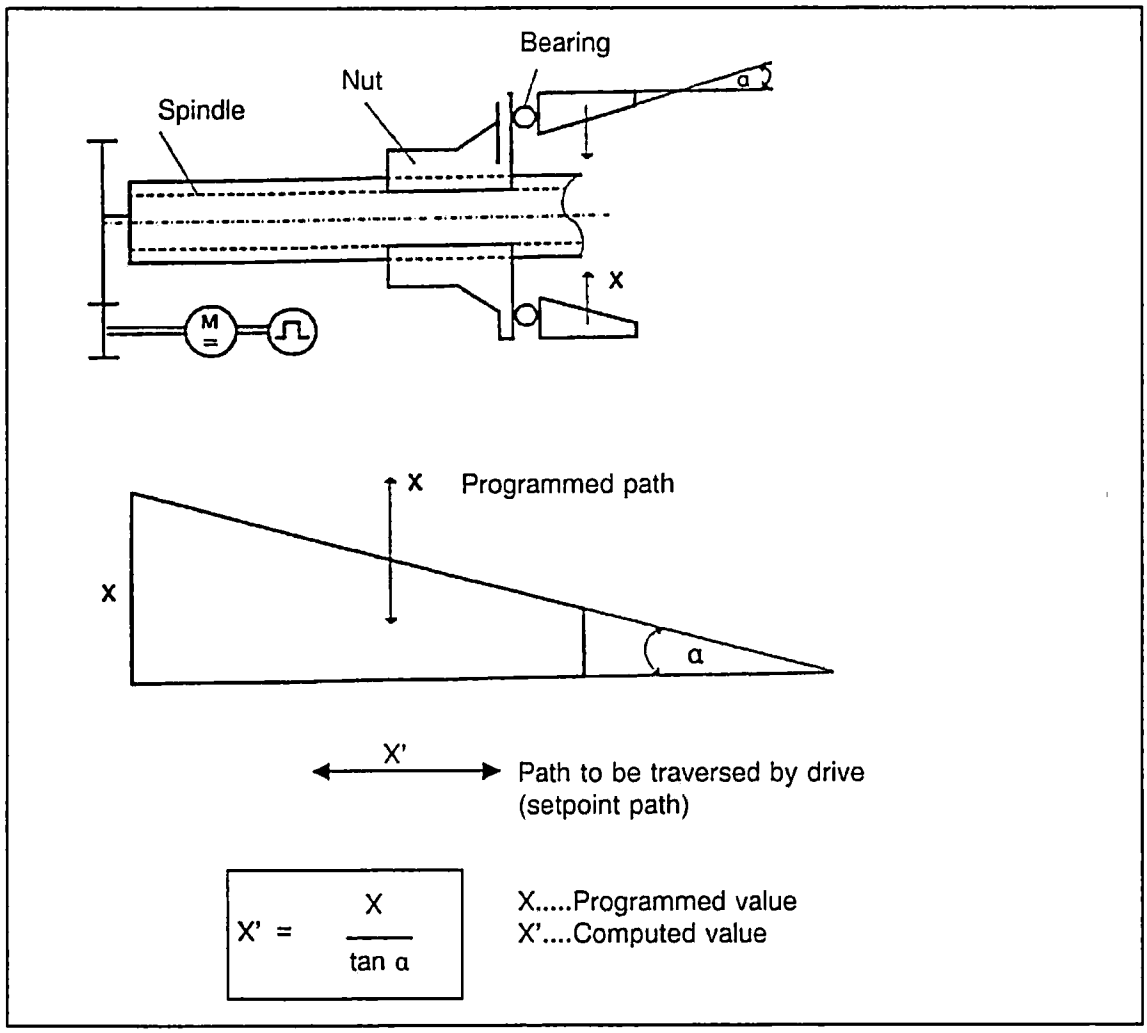

© Siemens AG 1990 All Rights Reserved 6ZB5 410-0EN02

Tan α (not angle α) is entered in NC MD 388* as weighting factor. The weighting factor may be in the range from + 0.00001 to + 99.999999.

NC MD 388* is evaluated as follows:

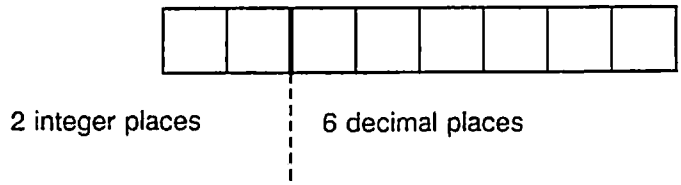

(leading zeroes may be omitted)

The value zero is interpreted as weighting factor 1, so that the programmed path and the path to be traversed are identical.

Conditions:

a) All other NC MD (in units (IS)) must be entered in the programmed system (X).

b) All other NC MD (in units (MS)) must be entered in the refined system (X').

c) The actual-value display (except in the Service displays), zero offsets, tool offset, PRESET offset, etc., relate to the programmed system.

d) The programmed F value relates to the programmed system.

e) If the programmed or specified speed exceeds the permissible axis speed in the refined system or cannot be converted into the internal computing format, alarm 2031 ("Weighting factor too high") is set and both machining and NC Start inhibited.

f) The weighting factor is effective in **all** modes.

g) The weighting factor is not effective in the case of rotary axes.

© Siemens AG 1990 All Rights Reserved 6ZB5 410-0EN02

392*	Feedforward time constant (as from Software Version 2)	392*

Sign	Input limits	Default value	Units	Increment
+	0 1000	0	0.1 ms	1

In order to avoid axis overshooting when working with feedforward control, the set part position is fed to the position controller with a time delay. This delay is set in MD 292* .

Input value:

= 0 Static feedforward control (e.g. for AC drives with a rise time < position control sampling interval)

≠ 0 Dynamic feedforward control (for axes with a rise time > position control sampling interval)

Note

Normal: $^1/_2$ rise time of drive

396*	Absolute offset (as from Software Version 2)	Active on Power On

Sign	Input limits	Default value	Units
±	99999999	0	units (IS)

The discrepancy between encoder absolute value and machine absolute value is entered in NC MD 396*.

The value of the discrepancy is determined automatically on machine synchronization (Reference point approach) or can be entered by the operator when synchronizing without reference point approach.

In addition, the NC machine data bits 1808* bits 0 and 3 must be taken into account.

© Siemens AG 1990 All Rights Reserved 6ZB5 410-0EN02

8.5 Axis-specific MD 2 (axial data 2)

1100*	Pre-limit switch		Active at once
Default value	Lower input limit	Upper input limit	Units
20 000	+0	± 99 999 999	units (MS)

Defines the distance at which the braking operation is to be prematurely begun if the current speed exceeds the speed in NC MD 1, thus ensuring that the position of the software limit switch will be overrun only to a negligible degree during circular interpolation.

Overshooting of the pre-limit switch triggers alarm 3091 except in the case of rapid traverse.

Recommendation

The value entered should be slightly higher than the value which would correspond to the braking distance from rapid traverse to NC MD 1.
In program mode, travel movements which would result in overshooting of the software limit switch position are simply not started (alarm 2065 is triggered).

Exception!

Circular interpolation, helical interpolation

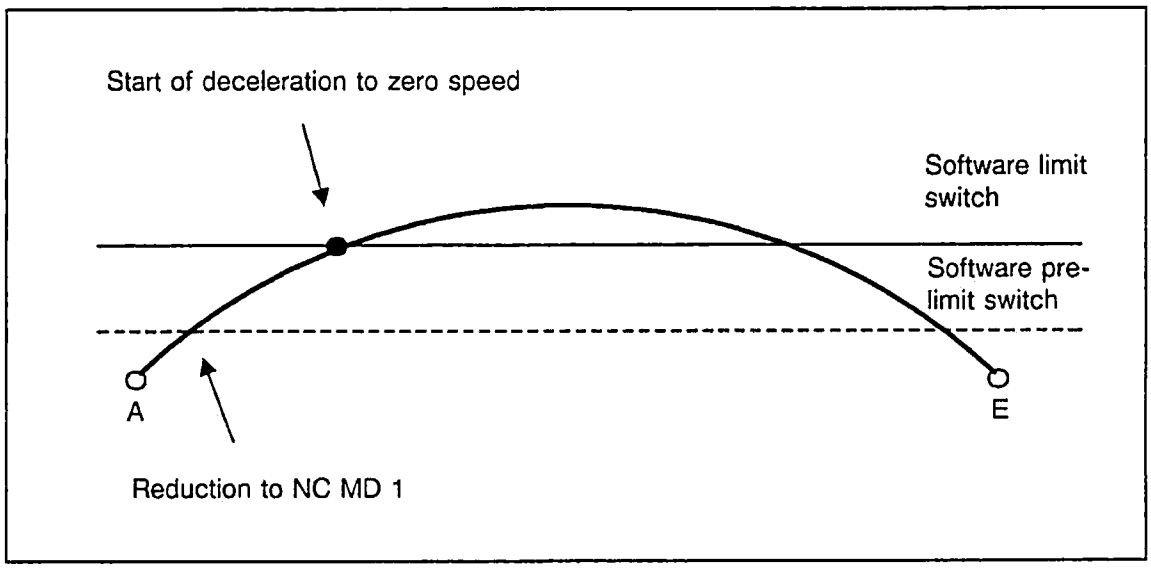

© Siemens AG 1990 All Rights Reserved 6ZB5 410-0EN02

Machine data for the "Setup mode division-related" function.

1104*	Number of divisions (as from Software Version 2)	

Default value	Lower input limit	Upper input limit	Units
0	1	999	–

Input limits: The value 0 is allowed only if the axis involved is not an indexing axis (NC MD 564* bit 4 = 0).

The number of divisions gives the divisions per division reference dimension (NC MD 1108*).

1108*	Division reference dimension (as from Software Version 2)	

Default value	Lower input limit	Upper input limit	Units
0	1	99 999 999	units (IS)

Note:

The rotary axis has a defaulted internal reference dimension of 360 degrees in accordance with the input resolution, i.e. no input has to be made in MD 1108*.

When using the function in conjuction with chain-type magazines it may be necessary for the rotary axis to perform several revolutions to arrive at one magazine revolution.

The division reference in this case will still be 360°. Adjustment of either the rotary axis or the chain-type magazine can be carried out by variable increment weighting.

© Siemens AG 1990 All Rights Reserved 6ZB5 410-0EN02

1112*	Division dimension offset (as from Software Version 2)		Active see below
Default value	Lower input limit	Upper input limit	Units
0	1	99 999 999	units (IS)

Remarks regarding the action of machine data:

If the use of the function is dependent on the workpiece, the machine data are changed while the workpiece is being machined and in setup mode. This can be done by:

- MD modification from the PLC
- MD modification via configuration (user memory submodule UMS)
- MD modification via CL 800

The machine data can be configured in such a way that they can be changed without start up mode. They take effect immediately after change without, for instance, Warm restart or Reset having to be performed.

If, for instance, the division machine data are changed while a division processing operation is in progress, they will take effect after about only 100 ms.

Traversing an indexing axis to the reference point

If the function is used on a machine-specific basis, the indexing axis can be traversed to a division-specific reference point. The MD "Reference point offset" can be used to specify the distance of the zero mark to an indexing position. The indexing axis need not be traversed to an indexing position using the reference point. The next traverse of the axis after reference point approach is automatically a movement to an indexing position.

Example:

Linear axis; Number of divisions = 5
Division reference dimension = 200,000 µm
Reference point = 140,000 µm;
Reference point offset = 0;

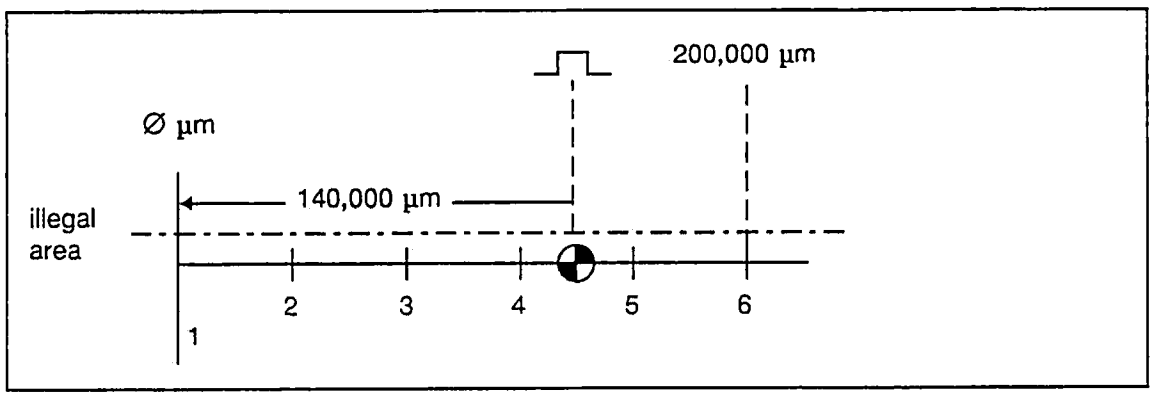

© Siemens AG 1990 All Rights Reserved 6ZB5 410-0EN02

1116*	HMS pulse multiplication (as from Software Version 2)		Active on Power On
Default value	Lower input limit	Upper input limit	Units
1	1	128	-

MD 1116* is used to set the multiplication factor for the actual position pulses when using the 6FX 1145-6B... HMS measuring-circuit module. On Power On, the NC software checks to see whether an HMS measuring-circuit module has been inserted; only when this is the case does MD 1116* take effect. For further details, also refer to Section 12.

The following multiplication factors can be specified:

1, 2, 4, 8, 16, 32, 64, 128.

Measuring system resolution = measuring system x 4 x MD 1116*

1124*	D components feed forward control (as from Software Version 2)		
Default value	Lower input limit	Upper input limit	Units
0	0	1000	0.1 %

Effective: When activating feed forward control

MD 1124* is used to modify the setpoint speed in proportion to acceleration.

© Siemens AG 1990 All Rights Reserved 6ZB5 410-0EN02

1224*	Servo enable delay (as from Software Version 2)		Power on
Default value	Lower input limit	Upper input limit	Units
400	0	1000	ms

The speed enable (servo enable) at the measuring circuit is revoked after the set delay time has elapsed. The servo enable is available on the measuring circuit once per axis/spindle and is allocated by the control on a mode group specific basis.

Action of the time delay entered:

1. After the interpolater has reached the programmed position, the clamping tolerance (MD 212*) is activated after the set time delay has elapsed. At this instant, the following error must therefore be less than the clamping tolerance. The time must be set to be long enough for the maximum following error (rapid traverse) to be removed. Failure to do this causes the servo enable at the measuring circuit to be revoked and alarm 112* (zero speed control) is issued.

   This applies only if NC MD 372* (zero speed control delay) is set to 0.

2. Time delay for removing the servo enable at the measuring circuit after "EMERGENCY STOP" and other errors leading to immediate stoppage of the axes (e.g. contour monitoring).

3. Time delay for removal of servo enable at the measuring circuit when the servo enable of an axis has be revoked by the PLC.

   Modification of MD 1224* does not take effect until "POWER ON" and replaces the axis-independent MD 156.

© Siemens AG 1990 All Rights Reserved 6ZB5 410-0EN02

1272*	Setpoint filter time constant (as from software version 2)	

Default value	Lower input limit	Upper input limit	Units
0	0	1000	0.1 ms

The setpoint filter prevents overshooting of positions in the case of a dynamic speed feedforward control of 100 %.

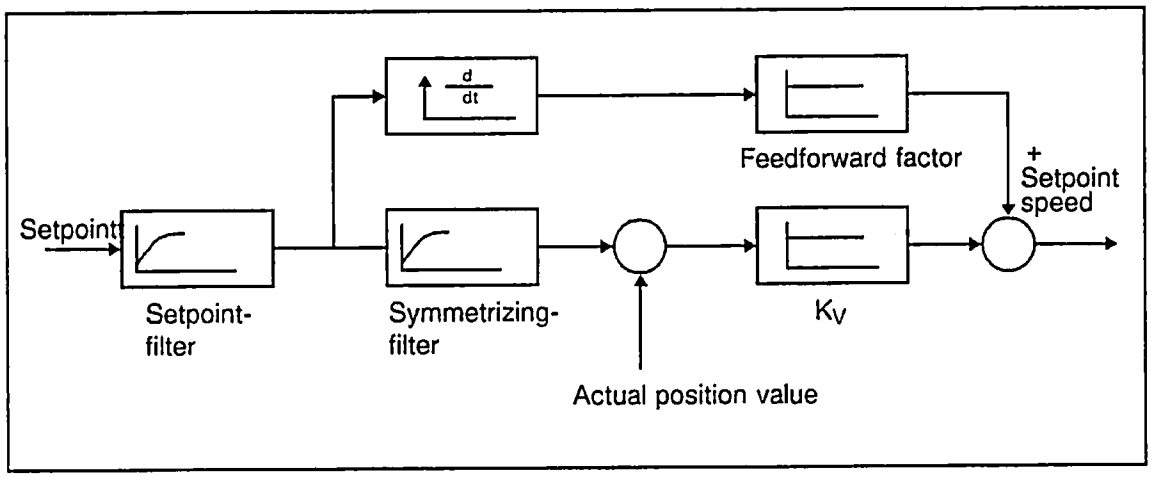

1396*	Factor for pos. controller clock pulse for axis (as from software version 2)	Active on Power On

Default value	Lower input limit	upper input limit	Units
1	1	64	–

The position controller clock pulse is used to modify NC MD 155 "Position controller sampling time", i. e. the controller can be slowed down by a factor of 2 to 64.

Permissible values:

1, 2, 4, 8, 16, 32, 64

The following applies:

Position controller clock pulse = Servo basic clock pulse x MD 1396*

Relationship: $\frac{\text{Interpolation clock pulse}}{\text{ax. pos. contr. clock pulse}} > 1$ (integer)

© Siemens AG 1990 All Rights Reserved 6ZB5 410-0EN02

8.6 Spindle-specific MD (spindle data)

400*	Spindle allocation		Active on Power On
Default value	Lower input limit	Upper input limit	Units
see table	+0	030 300 03	-

Default value	
4000	01030001
4001	0
4002	0
4003	0

The spindles available on the machine can be allocated to the measuring circuit modules in a flexible way. They are allocated separately according to actual value inputs (MD 400*) and setpoint outputs (MD 460*).

© Siemens AG 1990 All Rights Reserved 6ZB5 410-0EN02

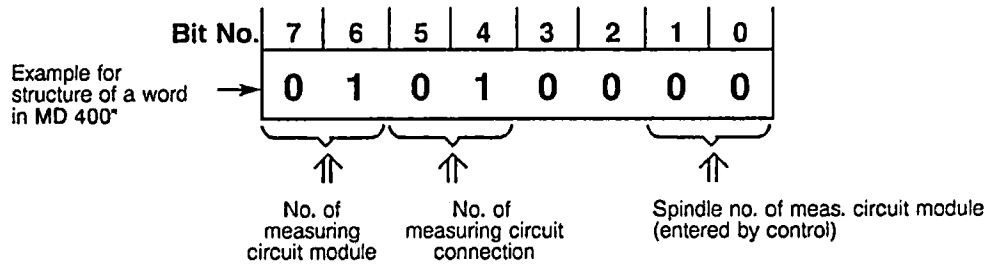

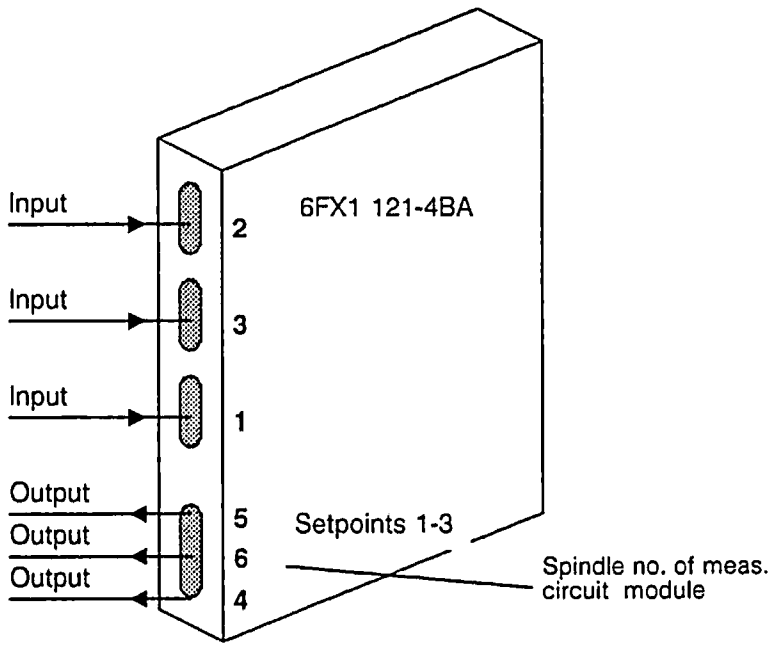

MD 400* defines at which measuring circuit module or input the spindle actual values are input. All measuring-circuit modules are interfaced to the same bus, and are therefore counted, i.e. numbered from left to right by the software automatically on Power On. There is no wiring block, i.e. no jumpering.

The basic configuration comprises one spindle.

Note:

- The value "00 00 00 00" is only permissible for MD 400*, if the spindle does not exist for the control (MD 521* bit = 7).
- Both SPC and HMS measuring circuit modules are allowed for actual value acquisition.

© Siemens AG 1990 All Rights Reserved 6ZB5 410-0EN02

401*	Spindle drift compensation		Active at once
Default value	Lower input limit	Upper input limit	Units
0	-500	500	VELO

The input value must be modified in the appropriate direction until the spindle exhibits identical actual speeds in both directions of rotation. The value must be adjusted at low speeds, and can be checked by viewing the appropriate information in the Basic display in the service display for spindles (spindles with encoder), using a rev counter, or screening the Service data. In M 19 (spindle positioning), the spindle drift goes directly into the positioning error.

403*-410*	Maximum speed for eight gears		Active on NC Stop
Default value	Lower input limit	Upper input limit	Units
see table	+0 up to SW 1 as from SW 2	16 000 99 999	rev/min[1)]

Gear	1	2	3	4	5	6	7	8
NC MD	403*	404*	405*	406*	407*	408*	409*	410*
Default	500	1000	2000	4000	4000	4000	4000	4000

NC MD 403* - 410* specify the maximum spindle speed reached in the individual gears at a setpoint of 10 V. When no gear is available, the maximum permissible spindle speed is entered in NC MD 403* and 0 in NC MD 404* to 410*. In the case of gear units with fewer than eight gears, 0 should be entered for the non-existing gears (a value other than 0 for a non-existent gear will cause the spindle to come to standstill).
Refer to Section 6 and/or Part 2 of the Interface Description for details on input signals for the gears.

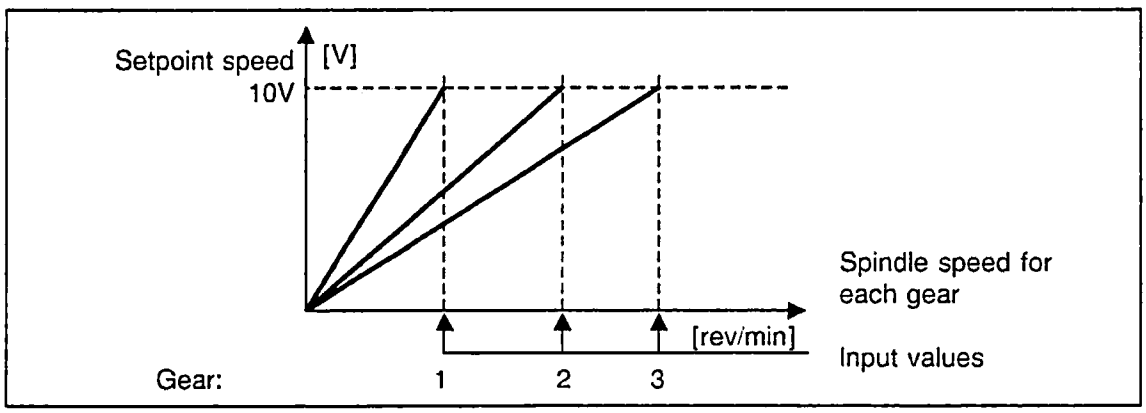

1) The input resolution is 0.1 rev/min, if MD 520 bit 3 = 1.*

© Siemens AG 1990 All Rights Reserved 6ZB5 410-0EN02

411*-418*	Minimum speed for eight gears		Active on NC Stop
Default value	Lower input limit	Upper input limit	Units
see table	+0 up to SW 1 as from SW 2	16 000 99 999	rev/min[1)]

Assignments

Gear	1	2	3	4	5	6	7	8
NC MD	411*	412*	413*	414*	415*	416*	417*	418*
Default	50	500	1000	2000	2000	2000	2000	2000

By entering the minimum gear speeds, the gear-speed range is defined. On the basis of the programmed spindle speed, the NC can now transfer the required gear and a request signal for a gear change to the PLC. Should the speed ranges for the various gears overlap, the NC choses the appropriate gear on the basis of the fewest number of gear changes required to arrive at the required speed ("Automatic gear selection").

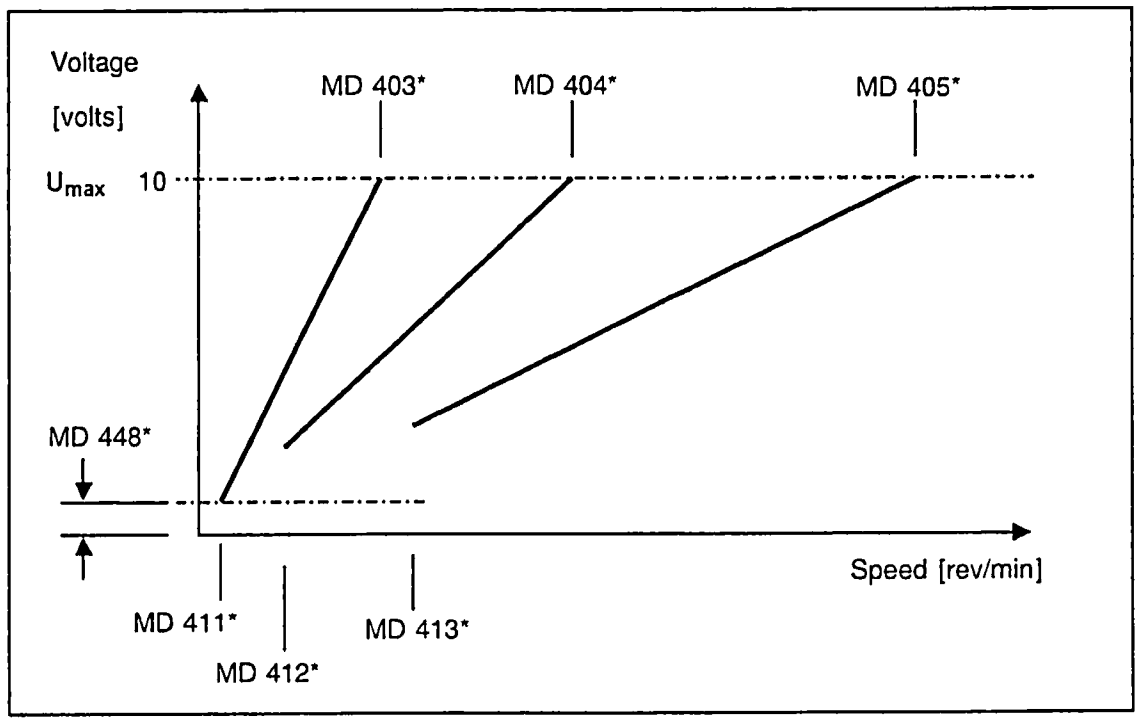

If 3rd gear has been engaged, the new S value must be smaller than the contents of MD 413* in order for the NC to initiate a gear change.

U_{max}: maximum setpoint speed voltage (MD 468*)

1) The input resolution is 0.1 rev/min, if MD 520* bit 3 = 1.

© Siemens AG 1990 All Rights Reserved 6ZB5 410-0EN02

419*-426*	Acceleration time constant for eight gears		Active on NC Stop
Default value	Lower input limit	Upper input limit	Units
Up to SW1 200 as from SW2 800	+0	Up to SW1 16 000 as from SW2 50 000	Up to SW1 4 ms as from SW2 1ms

Gear	1	2	3	4	5	6	7	8
NC MD	419*	420*	421*	422*	423*	424*	425*	426*

The control provides the setpoint for acceleration in the form of a ramp that is based on the contents of these MD. The MD thus act as variable ramp-function generators. They are set by measuring the interval from zero speed to maximum speed for each gear. NC MD 419*-426* can be set to zero when the drive actuator is equipped with an integrated ramp-function generator.

427*-434*	Cutoff speed for M19 for eight gears		Active on NC Stop
Default value	Lower input limit	Upper input limit	Units
100	+0	1 500	rev/min[1)]

Specifies the speed to which the spindle is to be reduced on an oriented spindle stop (M19) and at which travel is to continue until positioning on the basis of the specified position control characteristic (gain factor) has been completed (see also Section 6).

Assignments

Gear	1	2	3	4	5	6	7	8
NC MD	427*	428*	429*	430*	431*	432*	433*	434*

The cutoff speed is the limit beyond which no acceleration takes place:

- When positioning from zero speed, acceleration takes place up to or below the cutoff speed.
- When the spindle is running, the position controller becomes active as soon as positioning commences. The following applies regarding speed control:
  - If the momentary speed is less than cutoff speed, acceleration takes place up to cutoff speed.
  - If the momentary speed is greater than cutoff speed, it is maintained until it is possible to accurately reach the target position with maximum deceleration.

1) The input resolution is 0.1 rev/min, if MD 520 bit 3 = 1.*

© Siemens AG 1990 All Rights Reserved 6ZB5 410-0EN02

435*-442*	Gain factor for M19 for eight gears		Active on NC Stop
Default value	Lower input limit	Upper input limit	Units
200	+0	10 000	Up to SW 1 rev/min/360° as from SW2 1/100 s

Assignments

Gear	1	2	3	4	5	6	7	8
NC MD	435*	436*	437*	438*	439*	440*	441*	442*

On an oriented spindle stop (M19), the spindle is included in the position control loop. The gain factor is defined by the steepness of the approach to the cutoff position. The steepness, or slope, is defined as spindle speed (in rev/min) when 360° away from position (see also Section 6).

Note:
The "actual" gain factor of the gear obtained on the machine depends on several factors :

- Gain factor set for the gear
- Maximum rev/min for the gear speed
- Multgain factor (MD 468*)
- Setting of speed controller and drive

443*	Positional tolerance for M19		Active on NC Stop
Default value	Lower input limit	Upper input limit	Units
22 2 000	+0	4 096 720 000	up to SW1 approx. 1/110 as from SW2 position control resolution

On an oriented spindle stop (M19), the "SPINDLE POSITION REACHED" signal is output to the PLC over the interface (DB31 DLk bit 4) as soon as the positional deviation is within this tolerance. The positional tolerance is defined in pulse generator increments,[1] where 1 increment is equivalent to 360°/4096°.[1]The positional tolerance is given in terms of position control resolution. [2]

MD 443* has no effect on the positioning accuracy, because the control, in spite of the "Spindle position reached" signal, attempts to approach the specified position with the highest possible accuracy, unless the PLC or the NC aborts the positioning operation prematurely. The position control for the spindle remains active until the "Acknowledge M19" signal (DB31 DRK+2) has been generated or the "Spindle controller enable" signal is revoked. For position control cancellation, see also NC MD 520* bits 5 and 6. Position control is not cancelled by setting the "Spindle stop" signal (see also Section 6).

1) As from SW 1
2) As from SW 2

© Siemens AG 1990 All Rights Reserved 6ZB5 410-0EN02

444*	Spindle speed tolerance		Active on NC Stop
Default value	Lower input limit	Upper input limit	Units
10	+0	100	%

In systems with analog spindle speed and spindle encoder, the difference between actual speed and set speed is determined.

The actual speed is measured by means of the spindle encoders. The PLC is informed over the interface (DB31) of deviations exceeding the tolerance limit of the programmed spindle speed by removal of the "Spindle in set range" signal (DB31 DLk bit 5). This monitoring of the tolerance limit is always in force when a specified setpoint speed causes the spindle to start rotating, i.e. the tolerance is monitored and reported to the PLC even during the acceleration and deceleration phases.

The tolerance (rev/min) results from the tolerance (%) entered for the setpoint speed.

(Setpoint speed - tolerance) < actual speed < (setpoint speed + tolerance)
Monitoring is discontinued at 100 %.

Example
- S value: 1000 rev/min
- Tolerance in MD: 3%

  The permissible actual speed range is from 970 rev/min to 1030 rev/min.

445*	Maximum spindle speed tolerance		Active on NC Stop
Default value	Lower input limit	Upper input limit	Units
10	+0	100	%

In systems with analog spindle speed and spindle encoder, a deviation which extends beyond the maximum speed plus tolerance limit results in generation of the "Speed limit exceeded" signal (DB31 DLk bit 0) and issuance of alarm 225*. The NC then shuts down spindle and feed for this mode group. The lowest of the maximum spindle speed limits listed below becomes active:

- Maximum gear speed (NC MD 403* - 410*)
- Maximum spindle speed (NC MD 451*)
- For G96: Value in setting data (G92 S...)
- Setting data item for spindle speed limit (G26 S...)

Monitoring is discontinued at 100 %.

© Siemens AG 1990 All Rights Reserved 6ZB5 410-0EN02

446*	Zero speed tolerance		Active on NC Stop
Default value	Lower input limit	Upper input limit	Units
Up to SW1 10 as from SW2 100	+0	Up to SW1 10000 as from SW2 16000	0.01 %

Unit: 0.01 % of the maximum gear speed

The actual speed is measured in systems with analog spindle speed and spindle encoder. A "Spindle stationary" signal (DB31 DLk bit 3) informs the PLC when the actual speed falls below the zero speed.

Monitoring is discontinued at 100 % (entry in MD 446* ... 10000).

447*	Servo enable cutoff delay		Active on NC Stop
Default value	Lower input limit	Upper input limit	Units
1 000	+0	16 000	ms

The enable signal for the speed controller (servo enable) on the measuring circuit is removed when the specified delay time has elapsed. The delay takes effect in the following situations:

- Removal of the "Servo enable" signal
- "EMERGENCY STOP"
- "Response from the measuring-circuit monitor"
- Removal of the "Mode group ready" signal

448*	Minimum motor setpoint speed		Active on NC Stop
Default value	Lower input limit	Upper input limit	Units
SW1 50 SW2 3	+0	8 192 16 000	VELO rev/min 1)

NC MD 448* defines the minimum motor speed. The motor does not fall below this speed, for example, even when the cutting speed is constant and the turning diameter increases. In other words, when the motor reaches the minimum speed defined here, the cutting speed is no longer constant but increases with the turning diameter. Concentric running of the motor is possible up to this minimum speed.

Example

NC MD 448* = 50
50 x 1.22 mV = **61 mV**

1) The input resolution is 0.1 rev/min, if MD 520* bit 3 = 1.

© Siemens AG 1990 All Rights Reserved 6ZB5 410-0EN02

449*	Basic speed		Active on NC Stop
Default value	Lower input limit	Upper input limit	Units
50	+0	Up to SW1 9 999 as from SW2 99 999	rev/min 1)

If the PLC activates the "Basic speed" signal (DB31 DRk + 2, bit 5) and switches over to PLC spindle control, a spindle setpoint corresponding to this spindle speed is output, taking into account the gear just selected. Spindle override is active.

450*	Set oscillation speed		Active on NC Stop
Default value	Lower input limit	Upper input limit	Units
SW1 50 SW2 3	+0	8 192 16 000	VELO rev/min 1)

The (low) **spindle motor speed** entered here takes effect when the PLC generates the "OSCILLATION SPEED" signal (DB31 DRk + 2, bit 6) and switches over to PLC spindle control.

Note

The selection of an oscillating speed does not in itself result in oscillation. This must be brought about with "Set direction of rotation clockwise/counter-clockwise" (DB31 DRk + 2, bit 7).

451*	Maximum spindle speed		Active on NC Stop
Default value	Lower input limit	Upper input limit	Units
4 000	+0	Up to SW1 16 000 as from SW2 99 999	rev/min 1)

The "Speed limit exceeded" signal and alarm 225* are generated when the maximum spindle speed defined here is exceeded by more than the tolerance limit specified in NC MD 445* (also see NC MD 445*).

1) The input resolution is 0.1 rev/min if MD 520 bit 3 = 1*

© Siemens AG 1990 All Rights Reserved 6ZB5 410-0EN02

452*	Spindle position for external M19		Active on Power On
Default value	Lower input limit	Upper input limit	Units
0	+0	Up to SW 1 3 599 As from SW 2 35 999	Up to SW1 0.1° as from SW2 0.01°

If M19 is started by the PLC via the "Position spindle" and "PLC spindle control" signals, the NC positions the spindle to the angle specified in NC MD 452*.

453*	Spindle valid in operating mode group (BAG)		Active on Power On[1]
Default value	Lower input limit	Upper input limit	Units
1	+1, 2	+1, 2	units (MS)

NC MD 453* defines the mode group to which the spindle is to belong.

Mode groups without spindles are permitted.

1) Spindles can be allocated to another mode group via the warm restart function without having to execute a hardware reset (for a detailed description of the warm restart function, see Section 12).

© Siemens AG 1990 All Rights Reserved 6ZB5 410-0EN02

455*	Pulses for variable increment weighting 1) (As from SW 2)		Active on Power On
Default value	Lower input limit	Upper input limit	Units
32	0	65 000	–

456*	Traversing path for variable increment weighting 1) (As from SW 2)		Active on Power On
Default value	Lower input limit	Upper input limit	Units
5625	0	65 000	–

The internal calculations for the spindle are made in the resolution provided by the measuring system (measuring system resolution). In order to be able to carry out the internal conversions to the measuring system resolution, the latter must be entered in MD 456*. As for axes, input is not made via the encoder graduation and pulse multiplication but via variable increment weighting. This makes it possible to use spindle encoders with an arbitrary number of pulses and measuring gear.

The parameters for defining MD 455* and 456* can be taken from the table below.

Parameter	Symbol	Meaning
Position control resolution	b	Reference unit for traversing path; constant 0.5×10^{-3} degrees
Pulses per resolution	p	Number of encoder pulses per resolution
Pulse multiplication	f	Pulse multiplication for HMS measuring circuit module; MD 458*
Measuring gear	r1/r2	Gear transmission ratio between spindle and encoder

Parameters for defining MD 455 and 456**

MD 455* = $4 \times p \times f \times r2$ Number of measuring system pulses per encoder revolution including hardware multiplication; multiplied by r2

MD 456* = $\frac{360 \times r1}{b}$ Number of internally computed increments per encoder revolution; multiplied by r1

1) *MD 455* and 456* are invalid and are not evaluated, if the same measuring system is used for the spindle and C axis. MD 364* and 368* are valid instead.*

© Siemens AG 1990 All Rights Reserved 6ZB5 410-0EN02

If the values thus calculated are greater than the input limits, common factors **must** be reduced.

Note

- The position control resolution has been set to 0.5 x 10^{-3} degrees for the spindle.
- If the spindle is allocated to a C axis (MD 461*), the C axis resolution is used for the calculations (MD 1800*, 364*, 368*).
- The default values apply to the use of an SPC measuring circuit module and an encoder with 1024 pulses per revolution (see Example).

Examples

- Encoder mounted directly on the spindle; square pulse encoder and SPC measuring circuit module

  b = 0.5 x 10^{-3} degrees
  p = 1024 pulses per revolution
  f = 1 no pulse multiplication
  r1 = 1 no measuring gear
  r2 = 1

  If the spindle performs one full revolution, the encoder generates 4 x 1024 = 4096 pulses.

  If these factors are introduced into the formula:

  MD 4550 = 4 096
  MD 4560 = 720 000

  Reduction by the common factor 128 yields:

  MD 4550 = 32
  MD 4560 = 5625

- Encoder mounted to the spindle via the measuring gear; SIPOS unconditioned signal encoder and HMS measuring circuit module

  b = 0.5 x 10^{-3} degrees,
  p = 2500 pulses per revolution
  f = 8 HMS pulse multiplication
  r1 = 2 2 spindle revolutions correspond to
  r2 = 3 3 encoder revolutions

  If these factors are introduced into the formula then:

  MD 4550 = 240 000
  MD 4560 = 1 444 000

  Reduction by the common factor 240 000 yields:

  MD 4550 = 1
  MD 4560 = 6

© Siemens AG 1990 All Rights Reserved 6ZB5 410-0EN02

458*	Pulse multiplication for HMS (As from SW2)		Active on Power On
Default values	Lower input limit	Upper input limit	Units
0	0	128	–

The measuring system resolution can be adapted to any application using the HMS measuring circuit module. The pulses arriving from the encoder are multiplied in two steps:

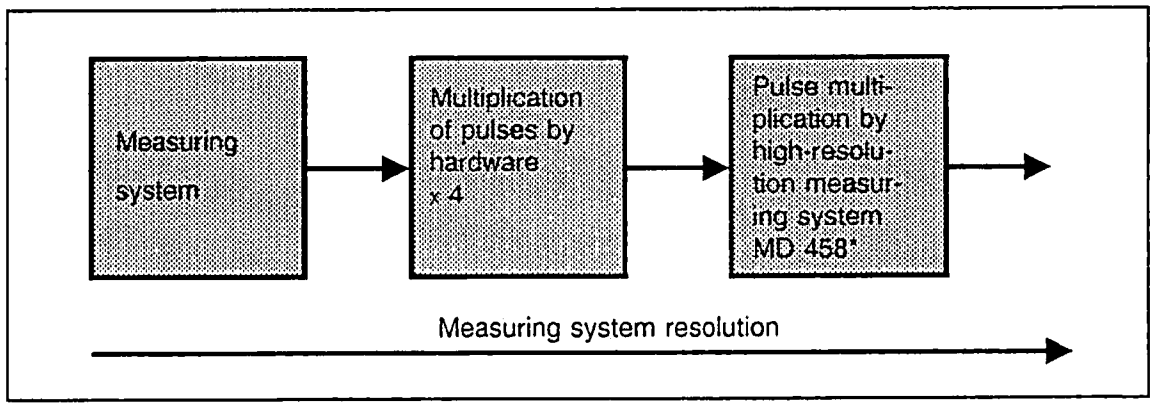

Pulse multiplication for HMS

The following values are permissible for MD 458* when using a HMS measuring circuit module:

1, 2, 4, 8, 16, 32, 64 and 128

Hence, the attainable maximum is a pulse multiplication by the factor 512.

Note

- Machine data 458* is taken into account only when a HMS measuring circuit module is used.
- The multiplication factor must be taken into account for variable increment weighting (MD 455*, 456*) .

© Siemens AG 1990 All Rights Reserved

459*	Zero mark offset		Active on Power On
Default value	Lower input limit	Upper input limit	Units
0	-18 000	18 000	0.01°

Using zero mark offset, the spindle angle zero position (e.g. after M19 S0) can be made to differ from the encoder zero mark. The spindle zero position can thus be defined arbitrarily.

In other words, the reference system for the spindle control is offset in relation to the encoder reference system.

Note

- Changes to MD 459* do not take effect until the spindle is resynchronized with the encoder.
- When specifying a positive value in MD 459*, the spindle angle zero position is offset in the direction which corresponds to clockwise rotation (M03).
- If a C axis is assigned to the spindle, the offset of the spindle zero mark is taken into account for reference point approach of the C axis.

Example

MD 4590 = 9 000	Zero mark offset by 90 degrees
M19 S270 L_F	The spindle is positioned to 270° in the control reference system. As this reference system is offset from the encoder zero mark by 90 degrees, the spindle will thus be on the encoder zero mark.

(see MD 463* for further examples)

© Siemens AG 1990 All Rights Reserved

460*	Spindle allocation setpoint output (As from SW 2)		Active on Power On
Default value	Lower input limit	Upper input limit	Units
0	0	See permissible values	–

MD 460* defines the assignment of the analog setpoint speed to a measuring circuit module and an output.

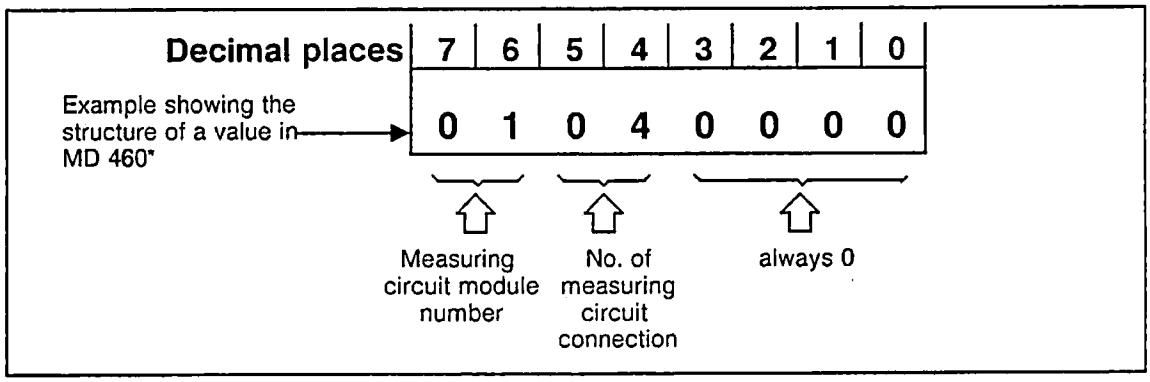

*Structure of MD 460**

Meaning of the individual terms

- The **measuring circuit module number** is the number of the module on the servo local bus. The modules are numbered from left to right in ascending order. The far left module has the number 1.

  Permissible values: 00 to 4

- The **number of the measuring circuit connection** determines the number of the output on the selected HMS or SPC module.

  Permissible values: 04 to 06 for SPC measuring circuit modules
  04 to 12 for HMS measuring circuit modules

Note

- The value "00 00 00 00" for MD 460* is permissible only if the spindle does not exist for the control (MD 521*, bit 7 = 0).

© Siemens AG 1990 All Rights Reserved

461*	Global axis number of allocated C axis (As from SW 2)		Active on Power On
Default value	Lower input limit	Upper input limit	Units
0	0	12	–

MD 461* defines which global axis number is used to operate the spindle when it works as C axis. This determines, for instance, which axis-specific machine data block is used.

If the value 0 is entered in MD 461, the spindle cannot be used as a C axis.

Note

- Any change in MD 461* does not take effect until Power On.
- If a C axis is assigned to a spindle (MD 461* not equal to 0), the internal calculations are also performed for this spindle in the measuring system resolution of the C axis. In the event of an identical measuring system, the variable increment rating of the axis must therefore be entered (MD 364*, 368*, 1800*).

462*	Spindle encoder cutoff frequency (As from SW 2)		Active on Power On
Default value	Lower input limit	Upper input limit	Units
200	0	16 000	kHz

The cutoff frequency of the spindles's actual value encoder is entered in MD 462*. The cutoff frequency can be taken from the encoder manufacturer's specifications.

Incoming pulses from the encoder may be lost when the cutoff frequency is exceeded. In this case actual value acquisition will not be correct. The SPINDLE SYNCHRONIZED interface signal is cancelled.

In the case of a repeated drop below the critical frequency, the spindle is automatically resynchronized with the encoder (hysteresis characteristic).

Note

If a separate encoder is not proivided for C axis operation, the limiting frequency of the spindle encoder is again monitored in this operating mode.

* *NC MD 455*, 456* are not active in this case.*

© Siemens AG 1990 All Rights Reserved

466*	Factor for position controller clock pulse for spindles (As from SW 2)		Active on Power On
Default value	Lower input limit	Upper input limit	Units
1	1	64	Multiple of position controller basic clock pulse

The number of axes and spindles on the servo key can be increased by increasing the position control sampling interval. Such increase will, however, impair the results produced by the controller.

The spindle-specific position controller sampling interval T_{LS} is

T_{LS} = MD 155 x MD 168 x MD 466

Note

- The position control sampling interval must be in an integer ratio to the selected interpolation clock pulse (MD 155).
- If a C axis is assigned to the spindle via MD 461*, the position controller clock pulses of spindle and C axis must coincide. The position controller clock pulse for the C axis is set in MD 155, MD 160, MD 168, MD 1396*.

Permissible values:

1, 2, 4, 8, 16, 32, 64

© Siemens AG 1990 All Rights Reserved

468*	Multgain factor (As from SW 2)		Active on Power On
Default value	Lower input limit	Upper input limit	Units
10 000	0	10 000	0.01 %

Like the axis-specific multgain factor (MD 260*), the spindle-specific multgain factor is used for digital tachogenerator matching. However, the value to be entered for the spindles must be calculated in a different way.

For spindles, different maximum speeds can be parameterized for eight gear ratios (MD 403* to 410*). The multgain factor, however, is used for all gear ratios.
This factor must therefor be defined independently of these maximum speeds.

The following applies, if U_{max} is used to define the setpoint speed voltage at maximum motor speed:

$$\text{Multgain} = \frac{U_{max}\ [V]}{10\ [V]} \times 10\,000$$

The factor 10 000 is only used to increase the input accuracy.

Example

U_{max} = 8.345 V
Multgain = 8 345

© Siemens AG 1990 All Rights Reserved

469*	Factor for gain switchover (As from SW 2)		Active on Power On
Default value	Lower input limit	Upper input limit	Units
100	1	16 000	%

In positioning mode, the spindle must be under position control in its target position. In order to ensure steady rest of the spindle even in the case of drift, extremely low setpoint speeds with a very high resolution must be fed to the drive actuator via the analog interface.

With some drive actuators it is therefore possible to choose a different scaling of the setpoint speeds by applying a configurable terminal signal.

Allowance must be made in the control for this change of scaling in the drive actuator so that the overall effective gain factor remains unchanged. To achieve this, the amplification factor (gear independent, MD 435* to 442*) must be matched to the new scaling.

The factor for gain switchover is

$$\text{MD } 469^* = \frac{1}{N}$$ N being the scaling factor in the drive actuator

Note

- Switchover of the gain factor is activated by setting the SWITCHOVER GAIN FACTOR interface signal. This signal must always be set together with the terminal signal.
- Entering the value 0 in MD 469* is equivalent to inputting the value 100. In neither of the two cases is the gain factor specified in MD 435* to 442* changed.

© Siemens AG 1990 All Rights Reserved

478*-485*	Acceleration time constant with position controller for 8 gears (as from SW 2)		Active on Power on
Default value	Lower input limit	Upper input limit	Units
2 000	0	50 000	1 ms

Assignments

Gear	1	2	3	4	5	6	7	8
NC MD	478*	479*	480*	481*	482*	483*	484*	485*

The control issues the ramp-form setpoints for acceleration and braking operations (ramp function generator). The gradient of this ramp is determined by the acceleration time constant.

Note

- Two acceleration time constants are provided for each gear ratio:
  - Acceleration time constant without position controller (MD 419* to 426*)
  - Acceleration time constant with position controller (MD 478* to 485*)

  The time constants without position controller are used for the open-loop control mode, the time constants with position controller for the position mode.
- MD 478* to 485* must be set such that the motor can follow the specified setpoints at any one time without reaching the current limit. Particular care should be taken be taken that this is also the case in the field weakening range.
- The data in 478* to 485* should always be greater than the data in 419* to 426*.

© Siemens AG 1990 All Rights Reserved

8.7 MD for monitor, positive colour representation as from Software Version 2

MD No.	Designation	Default value	Maximum input value	CLUT No. 1)
20000	Colour look-up table in configuration	0	62	254
20001	-//-	0	62	254
20002	-//-	0	62	254
20003	-//-	0	62	253
20004	Colour look-up table, standard assign.	32	62	253
20005	-//-	28	62	253
20006	-//-	10	62	252
20007	-//-	10	62	252
20008	-//-	10	62	252
20009	Colour look-up table in configuration	0	62	251
20010	-//-	0	62	251
20011	-//-	0	62	251
20012	-//-	0	62	250
20013	-//-	0	62	250
20014	-//-	0	62	250
20015	Colour look-up table, standard assign.	50	63	249
20016	-//-	25	63	249
20017	-//-	1	63	249
20018	-//-	28	63	248
20019	-//-	33	63	248
20020	-//-	34	63	248
20021	-//-	60	63	247
20022	-//-	62	63	247
20023	-//-	60	63	247
20024	-//-	0	63	246
20025	-//-	63	63	246
20026	-//-	63	63	246
20027	-//-	33	63	245
20028	-//-	7	63	245
20029	-//-	25	63	245
20030	-//-	63	63	244
20031	-//-	63	63	244
20032	-//-	0	63	244
20033	-//-	0	63	243
20034	-//-	0	63	243
20035	-//-	45	63	243
20036	-//-	0	63	242
20037	-//-	45	63	242
20038	-//-	0	63	242
20039	-//-	63	63	241
20040	-//-	0	63	241
20041	-//-	0	63	241
20042	-//-	0	63	240
20043	-//-	0	63	240
20044	Colour look-up table, standard assign.	0	63	240

© Siemens AG 1990 All Rights Reserved

MD for monitor, negative colour representation as from Software Version 2

MD No.	Designation	Default value	Maximum input value	CLUT No. 1)
20000	Colour look-up table in configuration	0	62	254
20001	- // -	0	62	254
20002	- // -	0	62	254
20003	- // -	0	62	253
20004	Colour look-up table, standard assign.	32	62	253
20005	- // -	28	62	253
20006	- // -	10	62	252
20007	- // -	10	62	252
20008	- // -	10	62	252
20009	Colour look-up table in configuration	0	62	251
20010	- // -	0	62	251
20011	- // -	0	62	251
20012	- // -	0	62	250
20013	- // -	0	62	250
20014	- // -	0	62	250
20015	Colour look-up table, standard assign.	63	63	249
20016	- // -	31	63	249
20017	- // -	0	63	249
20018	- // -	28	63	248
20019	- // -	33	63	248
20020	- // -	34	63	248
20021	- // -	63	63	247
20022	- // -	63	63	247
20023	- // -	63	63	247
20024	- // -	0	63	246
20025	- // -	63	63	246
20026	- // -	63	63	246
20027	- // -	41	63	245
20028	- // -	0	63	245
20029	- // -	41	63	245
20030	- // -	63	63	244
20031	- // -	63	63	244
20032	- // -	0	63	244
20033	- // -	0	63	243
20034	- // -	0	63	243
20035	- // -	63	63	243
20036	- // -	0	63	242
20037	- // -	45	63	242
20038	- // -	0	63	242
20039	- // -	63	63	241
20040	- // -	0	63	241
20041	- // -	0	63	241
20042	- // -	0	63	240
20043	- // -	0	63	240
20044	Colour look-up table, standard assign.	0	63	240

1) *CLUT = Colour look-up table. 3MDs for the colours red. green and blue.*

© Siemens AG 1990 All Rights Reserved

MD for monitor, positive monochrome representation as from Software Version 2

MD No.	Designation	Default value	Maximum input value	CLUT No. 1)
20000	Colour look-up table in configuration	0	62	254
20001	-//-	0	62	254
20002	-//-	0	62	254
20003	-//-	32	62	253
20004	Colour look-up table, standard assign.	32	62	253
20005	-//-	32	62	253
20006	-//-	44	62	252
20007	-//-	44	62	252
20008	-//-	44	62	252
20009	Colour look-up table in configuration	0	62	251
20010	-//-	0	62	251
20011	-//-	0	62	251
20012	-//-	0	62	250
20013	-//-	0	62	250
20014	-//-	0	62	250
20015	Colour look-up table, standard assign.	26	63	249
20016	-//-	26	63	249
20017	-//-	26	63	249
20018	-//-	33	63	248
20019	-//-	33	63	248
20020	-//-	33	63	248
20021	-//-	63	63	247
20022	-//-	63	63	247
20023	-//-	63	63	247
20024	-//-	44	63	246
20025	-//-	44	63	246
20026	-//-	44	63	246
20027	-//-	26	63	245
20028	-//-	26	63	245
20029	-//-	26	63	245
20030	-//-	0	63	244
20031	-//-	0	63	244
20032	-//-	0	63	244
20033	-//-	0	63	243
20034	-//-	0	63	243
20035	-//-	0	63	243
20036	-//-	0	63	242
20037	-//-	0	63	242
20038	-//-	0	63	242
20039	-//-	16	63	241
20040	-//-	16	63	241
20041	-//-	16	63	241
20042	-//-	0	63	240
20043	-//-	0	63	240
20044	Colour look-up table, standard assign.	0	63	240

1) *CLUT:= Colour look-up table. 3MDs for the colours red, green and blue.*

© Siemens AG 1990 All Rights Reserved

MD for monitor, negative monochrome representation as from Software Version 2

MD No.	Designation	Default value	Maximum input value	CLUT No. 1)
20000	Colour look-up table in configuration	0	62	254
20001	- // -	0	62	254
20002	- // -	0	62	254
20003	- // -	32	62	253
20004	Colour look-up table, standard assign.	32	62	253
20005	- // -	32	62	253
20006	- // -	10	62	252
20007	- // -	10	62	252
20008	- // -	10	62	252
20009	Colour look-up table in configuration	0	62	251
20010	- // -	0	62	251
20011	- // -	0	62	251
20012	- // -	0	62	250
20013	- // -	0	62	250
20014	- // -	0	62	250
20015	Colour look-up table, standard assign.	26	63	249
20016	- // -	26	63	249
20017	- // -	26	63	249
20018	- // -	33	63	248
20019	- // -	33	63	248
20020	- // -	33	63	248
20021	- // -	63	63	247
20022	- // -	63	63	247
20023	- // -	63	63	247
20024	- // -	44	63	246
20025	- // -	44	63	246
20026	- // -	44	63	246
20027	- // -	38	63	245
20028	- // -	38	63	245
20029	- // -	38	63	245
20030	- // -	63	63	244
20031	- // -	63	63	244
20032	- // -	63	63	244
20033	- // -	63	63	243
20034	- // -	63	63	243
20035	- // -	63	63	243
20036	- // -	63	63	242
20037	- // -	63	63	242
20038	- // -	63	63	242
20039	- // -	50	63	241
20040	- // -	50	63	241
20041	- // -	50	63	241
20042	- // -	0	63	240
20043	- // -	0	63	240
20044	Colour look-up table, standard assign.	0	63	240

1) *CLUT = Colour look-up table. 3MDs for the colours red, green, blue.*

© Siemens AG 1990 All Rights Reserved

MD for monitor, colour representation

Con-ver-sion list No.	MD No.	Display elements	Default value			
			positive		negative	
			Value	Colour	Value	Colour
	20 192	Flashing colour(s) (for system)	254	Orange		Yellow
	20 193		50	rd,gr	63	rd_1
	20 194		25	gn	63	gn_1
	20 195		1	bl	0	bl_1
	20 196		60	wt	0	rd_2
	20 197		62	wt	0	gn_2
	20 198		60	wt	0	bl_2
	20 199	Flashing colours				
	to	(unassigned, can be configured)				
	20 247					

Positive colour flashes orange/white
Negative colour flashes yellow/black.

© Siemens AG 1990 All Rights Reserved

MD for monitor, monochrome representation

Conversion list No.	MD-Nr.	Display elements	Default value			
			positive		negative	
			Value	Colour	Value	Colour
	20 192	Flashing colour (for system)	254	bk/wt		wt/bk
	20 193		0		63	rd
	20 194		0		63	gn
	20 195		0		63	bl
	20 196		63		0	rd2
	20 197		63		0	gn2
	20 198		63		0	bl2
	20 199	Flashing colours				
	to	(unassigned, can be configured)				
	20 247					

© Siemens AG 1990 All Rights Reserved

MD No.	Designation	Default value	Maximum input value
20248 . . . **20311**	Conversion list display elements for configuration	0 . . . 0	254 . . . 254
20312 . . . **20343**	Conversion list display elements, standard assignments (see Table)	See Table	249 . . . 249
20344 . . . **20375**	Conversion list display elements for configuration	0 . . . 0	254 . . . 254
20400 **20401** . . . **20449**	MD for channel in data memory 1)	1 . . . 2	4 . . . 4

1) MD 20400 - 20419 reserved for customer UMS
MD 20420 - 20439 reserved for system UMS

If 1 is set in MD 20440, the basic display channel 1 appears on the left side or, in the case of large actual value display, in the upper part of the display.

If 2 is set in MD 20441, the basic display channel 2 appears on the right side or, in the case of large actual value display, in the lower part of the display.

© Siemens AG 1990 All Rights Reserved

Table of conversion lists for display elements as from Software Version 2

Conversion List No.	MD No.	Display Elements	Default value			
			positive		negative	
			Value	Colour	Value	Colour
64	20 312	Softkey text and margin	247	wt	247	wt
65	20 313	Softkey background and colour for text erasures	248	gy	248	gy
66	20 314	Softkey text and margin active	247	wt	247	wt
67	20 315	Softkey background and colour for text erasures active	248	gy	248	gy
68	20 316	ETC / RCL char.	241	rd	241	rd
69	20 317	Dialog line text	245	vi	245	vi
70	20 318	Dialog line background	247	wt	240	bk
71	20 319	Special texts	247	wt	247	wt
72	20 320	Input line text	245	vi	245	vi
73	20 321	Input values text, PP cursor	249	or	244	ye
74	20 322	Input line background	247	gy	240	bk
75	20 323	Alarm text	241	rd	241	rd
76	20 324	Alarm text background	252	gy9	252	gy9
77	20 325	Message text	249	or	244	ye
78	20 326	Message text background	252	gy9	252	gy9
79	20 327	Commentary text	247	wt	247	wt
80	20 328	Commentary text background	252	gy9	252	gy9
81	20 329	Status display text	242	gn	242	gn
82	20 330	Window header text	247	wt	247	wt
83	20 331	Actual values	245	vi	245	vl
84	20 332	Data area bar	240	bk	240	bk
85	20 333	Data area bar background	253	si	253	si
86	20 334	Data area bar text active	247	wt	247	wt
87	20 335	Data area bar background active	248	gy	248	gy
88	20 336	Background for middle portion of display	247	wt	240	bk

© Siemens AG 1990 All Rights Reserved

Con-ver-sion List No.	MD No.	Display elements	Default value			
			positive		negative	
			Value	Colour	Value	Colour
89	20 337	Background for outer portion of display	252	gy9	252	gy9
90	20 338	Background for entire display	252	gy9	252	gy9
91	20 339	Miscellaneous text and margin	240	bk	247	wt
92	20 340	Red line	241	rd	241	rd
93	20 341	Blue/green line	243	bl	242	gn
94	20 342	Orange/yellow line	249	or	244	ye
95	20 343	Black/blue line	240	bk	243	bl
96	20 344	Violet/cyan line	245	vi	246	cy
97	20 345	Violet line	245	vi	245	vi
98	20 346	Orange line	249	or	249	or
99	20 347	Grey line	248	gy	248	gy
100	20 348	Flashing colour	254	Flashing	254	Flashing
101	20 349	White line	247	wt	247	wt
102	20 350	Black line	240	bk	240	bk
103	20 351	Blue/cyan line	243	bl	246	cy
104	20 352	Cyan/blue line	246	cy	243	bl
105	20 353	Green line	242	gn	242	gn
106	20 354	Yellow line	244	ye	244	ye

© Siemens AG 1990 All Rights Reserved

8.8 Machine data bits

8.8.1 General MD bits (general bits)

NC MD	Bit No. 7	6	5	4	3	2	1	0
5000					Name of radius and chamfer			
5001					Name of the angle			

Default value		
MD	**840T**	**840M**
5000	0000 0100	0000 0110
5001	0000 0011	0000 0011

Name of **radius** and **chamfer** for:

- Contour definition
- Circular-path programming
- Polar coordinates

Name of angle for:

- Contour definition
- Polar coordinates

3	2	1	0	Bit No.

Address name

Code:

X = 0000
Y = 0001
Z = 0010
A = 0011
B = 0100
C = 0101
U = 0110
V = 0111
W = 1000
Q = 1001
E = 1010

Examples:
0100 = B
0110 = U

Valid names for axes, angles, chamfer and radius

A Assignable address	N Subordinate block
B Assignable address	O Danger of confusion with 0 (zero)
C Assignable address	P No. of subroutine passes
D Tool offset	*Q Assignable address*
E Assignable address	R Computational parameter
F Feed	S Spindle speed, S function
G G function	T Tool
H H function	*U Assignable address*
I Interpolation parameter	*V Assignable address*
J Interpolation parameter	*W Assignable address*
K Interpolation parameter	*X Assignable address*
L Subprogram (subroutine)	*Y Assignable address*
M M function	*Z Assignable address*

The names in MD 5000, MD 5001 and 568* must not overlap. An identical axis name with different extended address is not regarded as overlap.
The names become effective in the next block.

© Siemens AG 1990 All Rights Reserved 6ZB5 410-0EN02

NC MD	Bit No. 7	6	5	4	3	2	1	0
5002	Input resolution							

Possible combinations

Bit	**G71**				**G70**			
7	1	0	0	1	0	1	1	0
6	0	1	0	0	1	1	0	1
5	0	0	1	1	0	0	1	1
4	0	0	0	0	1	1	1	1
	10^{-2}	10^{-3}	10^{-4}	10^{-5}	10^{-3}	10^{-4}	10^{-5}	10^{-6}
	mm/degrees				inches/degrees			

Default value: 0100 0000

For combinations with display resolution (NC MD 1800*) and position control resolution (NC MD 1800*) see Section 5.5.

Active: On NC STOP

© Siemens AG 1990 All Rights Reserved 6ZB5 410-0EN02

NC MD	Bit No. 7	6	5	4	3	2	1	0
5003	No de-celeration at limit switch	Working area limitation in force in JOG mode	Interpol. params dependent on G91/G90	Polar co-ord. angle dependent on G91/G90	Do not clear PRESET OFFSET on	Auxiliary function output before travel		

Default value: 0000 0100

Bit 7 No deceleration on reaching the software limit switch. When this bit is set, braking does not follow the acceleration/deceleration curve; only the following error is suppressed. The limit switch is not overrun to any great extent (also see NC MD 1100*).
Active: At once

Note

In the case of interpolating axes, all axes are stopped when the range limit of an axis is reached. Stopping without a contour violation, however, is guaranteed only when bit 7 of MD 5003 is not set (no deceleration at limit switch), i.e. deceleration takes place over the acceleration ramp.

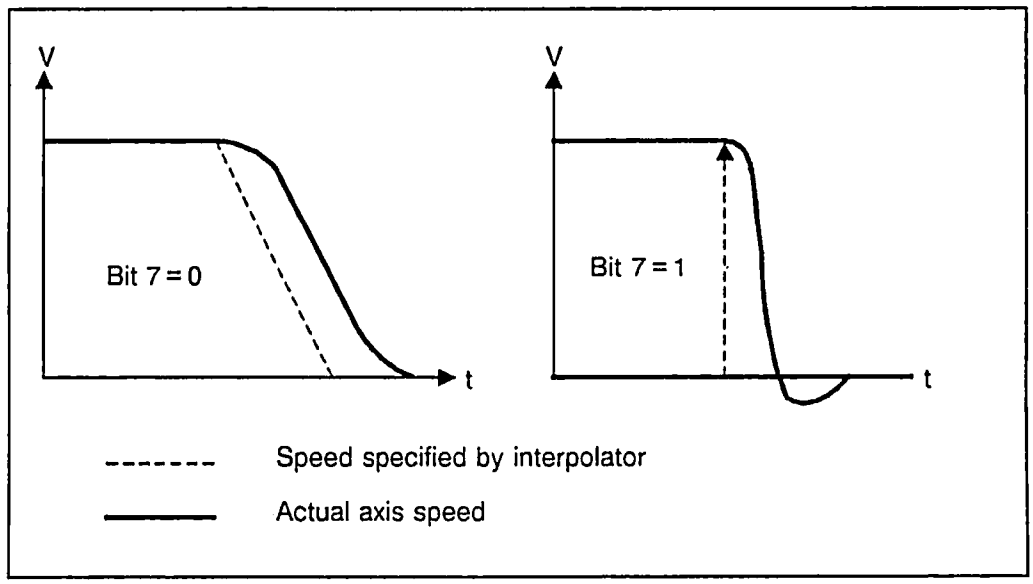

Bit 6 The working area limitation is also effective in JOG mode. In addition to the software limit switches, the working area can therefore be limited in JOG mode, thereby better safeguarding the machine against unintentional travel. However, since a working area limitation is a software limitation, proper operation can only be ensured following reference point approach.
Active: At once

© Siemens AG 1990 All Rights Reserved 6ZB5 410-0EN02

Bit 5 When bit 5 is set, the interpolation parameters (I, J, K) can be programmed either as absolutes (G90) or as increments (G91) in the block (also see NC MD 5007, bit 5). The interpolation parameters for contour definitions (blueprint programming) must always be specified incrementally (G91), regardless of whether bit 5 is set or not.
Active: In the next block

Example:

```
N1   G0   G90  X80  Y55  F500  LF
N2   G02  X50  Y85  I50  J55   F500  LF
N3   G01  X50  Y75  LF
N4   G03  X50  Y35  I50  J55   LF
N5   M30  LF
```

When the interpolation parameters are specified as absolutes, the centre point refers to the centre point of the workpiece, not to the starting point of the circular path.

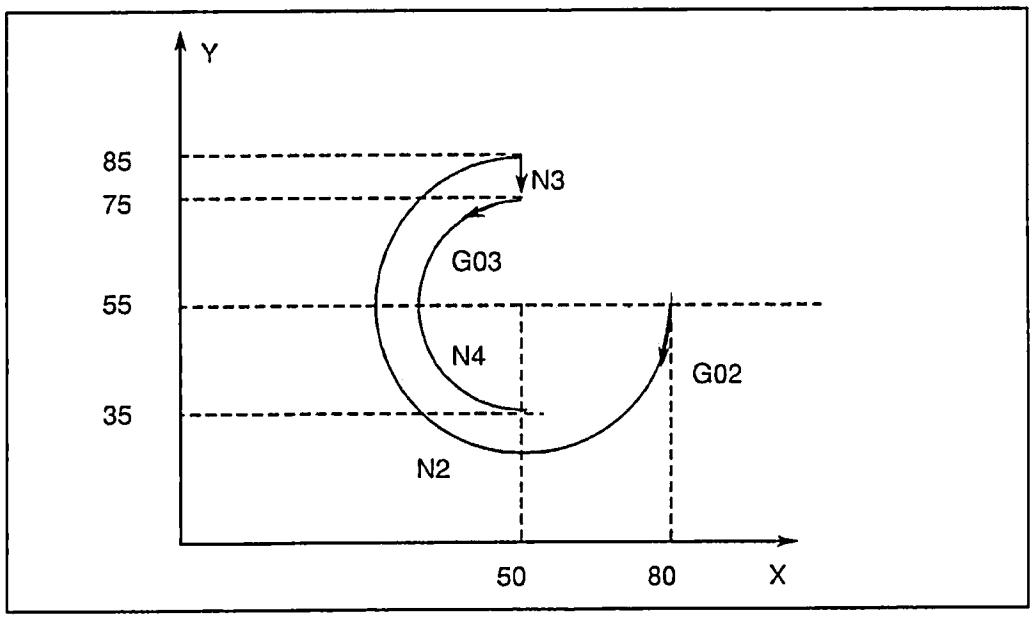

If an interpolation parameter was not programmed because it was "0", the G function, which also precedes the programmed interpolation parameter, also refers to the interpolation parameter that was not programmed.

Example:

```
G02  X50  Y60  G91  I..    J = 0 need not be programmed. G91 refers to
                            both I and to the non-programmed J.
G02  X50  Y60  G90  I..    J = 0 need not be programmed. In this case, G90
                            lies in the workpiece centre point. Circle end
                            position error is displayed (alarm 2048).
```

© Siemens AG 1990 All Rights Reserved 6ZB5 410-0EN02

Bit 4 When bit 4 is set, the polar coordinate angles (G10, G11, G12, G13, G110, G111) can be programmed as either absolutes (G90) or increments (G91) in the block (also see NC MD 5007, bit 5).
Active: In the next block

Example:

```
N1   G0   G90  X0   Y0   LF
N2   G11  X0   Y0   A30  B40  F500 LF
N3   G91  G110 A30  LF
N4   G90  G110 A30  B30  LF
N5   M30  LF
```

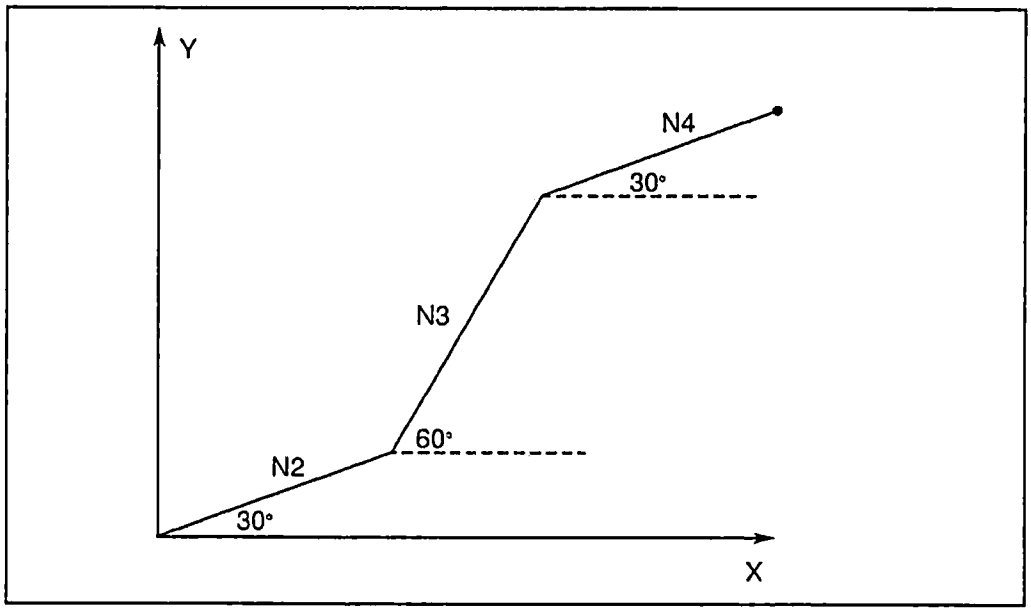

Bit 3 **Bit 3 = 1:** The old "PRESET OFFSET" is automatically retained following reference point
Active: At once

© Siemens AG 1990 All Rights Reserved 6ZB5 410-0EN02

Bit 2 **Bit 2 = 0,** Auxiliary function output during axis movement
Bit 2 = 1, Auxiliary function output prior to travel
Active: At once

If an auxiliary function (M, S, T, H, D) is also programmed in a traversing block, **bit 2** can bring about the following two states:

Example:

N 10
N 15 M6 X100 LF
N 20

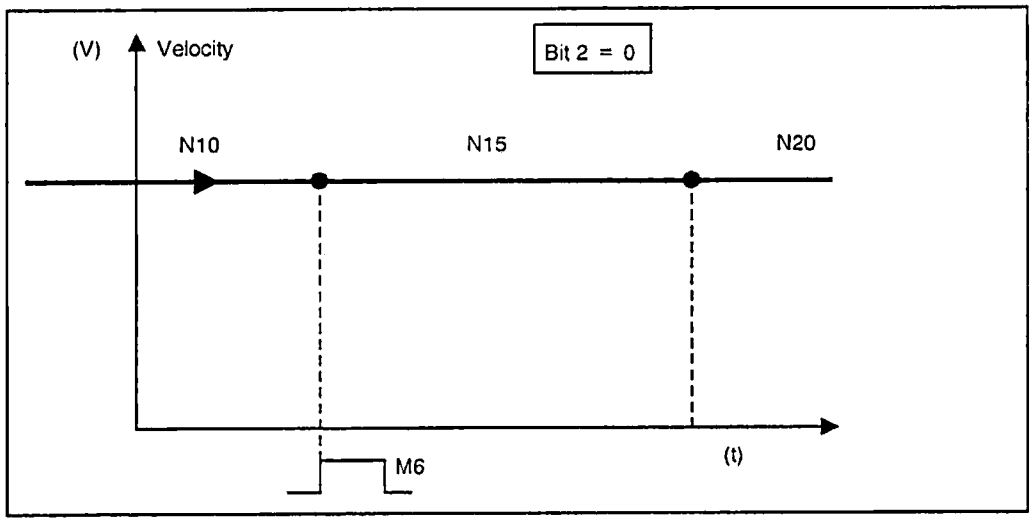

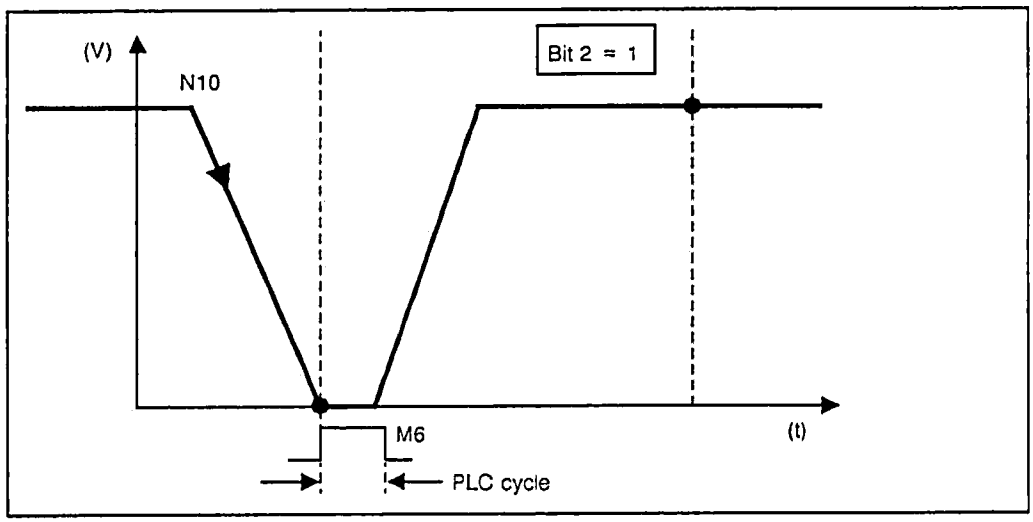

© Siemens AG 1990 All Rights Reserved 6ZB5 410-0EN02

NC MD	Bit No. 7	6	5	4	3	2	1	0
5004		Mode group spec. single block, type B	Mode group spec. single block, type A	Own rapid traverse override	NC Start without ref.point		2nd handwheel available	1st handwheel available

Default value: All bits default to 0

Bit 6: The first channel to process a block sets the remaining channels in the same mode group to STOP. The axes that were halted are put into motion on the next Start. The channel that initiated the Stop begins with the next block. Type B single block.
Active: In the next block

Bit 5: The next NC Start is effective only when all channels in the same mode group have processed their blocks and the axes are at a standstill. Type A single block.
Active: In the next block

Bit 4: Bit 1 = 1 Feed override effective for rapid
Bit 1 = 0 Own rapid override via DB 10-13 DR1 effective for rapid
Override is activated by selecting the appropriate softkey and FB 78 or DB 10-13 DR1 bit 5.

Bit 3: The PLC signal "NC START" (DB 10-17 DR2 bit 0) initiates a program start, even if the reference points have not been approached, at least not for all axes, i.e. the feed axes have not been synchronized with the machine position. MD 560* bit 4 is irrelevant in this case. In order to ensure correct workpiece machining, synchronization must be carried out in another form, such as through use of the scratch method.
Active: At once

Bit 1,0: The number of available handwheels is specified as follows:
Active: At once

Bit	**1**	**0**
One handwheel	0	1
Two handwheels	1	1

© Siemens AG 1990 All Rights Reserved 6ZB5 410-0EN02

NC MD	Bit No. 7	6	5	4	3	2	1	0
5005				KEYSWITCH effective for: ZO fine	ZO coarse	TO wear	TO geometry	

Default value: All 0

Bit 4 to 1 The keyswitch can be used to prevent the entry or modification over the NC operator panel of the following data by setting the corresponding bit(s):

Bit 4: Zero offset (G54 - G57) fine
Bit 3: R parameters angle of rotation zero offset (G54 - G57) coarse
Bit 2: TO wear (parameters P5 to P7)
Bit 1: TO geometry

Bits 2 and 1 are effective only when the standard display for tool offsets (P0 ÷ 9) is not modified in any way. When configuring tool offsets, the keyswitch group (bits 5 to 7) for the data fields (P0 to Pxy) must also be configured via the NC workstation (WS 800A).
Active: At once

NC MD	Bit No. 7	6	5	4	3	2	1	0
5006			KEYSWITCH effective for: Select installation		PP manual input	Dry run feedrate	DRF	OVER-STORE

Default value: All bits default to 0

Bit 5 to 0 Entry or modification of the following data over the NC operator panel can be inhibited via the keylock switch by setting the corresponding NC MD bit(s).
Active: At once

Bit 5: Select installation
Bit 3: Input of part programs over the operator panel (EDIT, INPUT, CANCEL)
Bit 2: DRY RUN
Bit 1: Traversing via handwheel in Auto mode (DRF function)
Bit 0: Entry of H, S, M, T and D functions in OVERSTORE submode

© Siemens AG 1990 All Rights Reserved 6ZB5 410-0EN02

NC MD	Bit No. 7	6	5	4	3	2	1	0
5007	TO in diameter	Tool wear not active	Mixed programming G90/91 in block		Tool basic dimension active	No output of M17	G53 as @706	Length compensation even for non-programmed axes

Default value: 0000 0100
Active: In the next block

Bit 7 **Bit 7 = 0** The cutter (tool parameter P1 = 20) is defined as length (P2) and radius (P4). Consider also NC MD 5008, bit 4.
Bit 7 = 1 The cutter is defined as length and diameter. The cutter radius is always over radius.

Bit 6 This bit can be used to declare all tool wear data invalid. The tool wear data (P5 to P7) are thus available for user-specific purposes. A value can be added to or subtracted from the tool geometry data using the "EDIT" key.

Bit 5 In a part program, the manner in which programmed values are to be interpreted, i.e. whether they are to be regarded as absolute (G90) or incremental (G91) values, always relates to a whole block (up to LF). There are, of course, numerous exceptions, such as in the dimensioning of a circle centre, which must always relate incrementally to the starting point of the circular path.
Setting bit 5 to 1 makes it possible to define how each separate programmed value (axis, interpolation parameter, angle) is to be interpreted as absolute (G90) or increment (G91) (for further details on interpolation parameters and angles see NC MD 5003, bits 4 and 5).

© Siemens AG 1990 All Rights Reserved 6ZB5 410-0EN02

Example: Combination programming G90/91 in one block

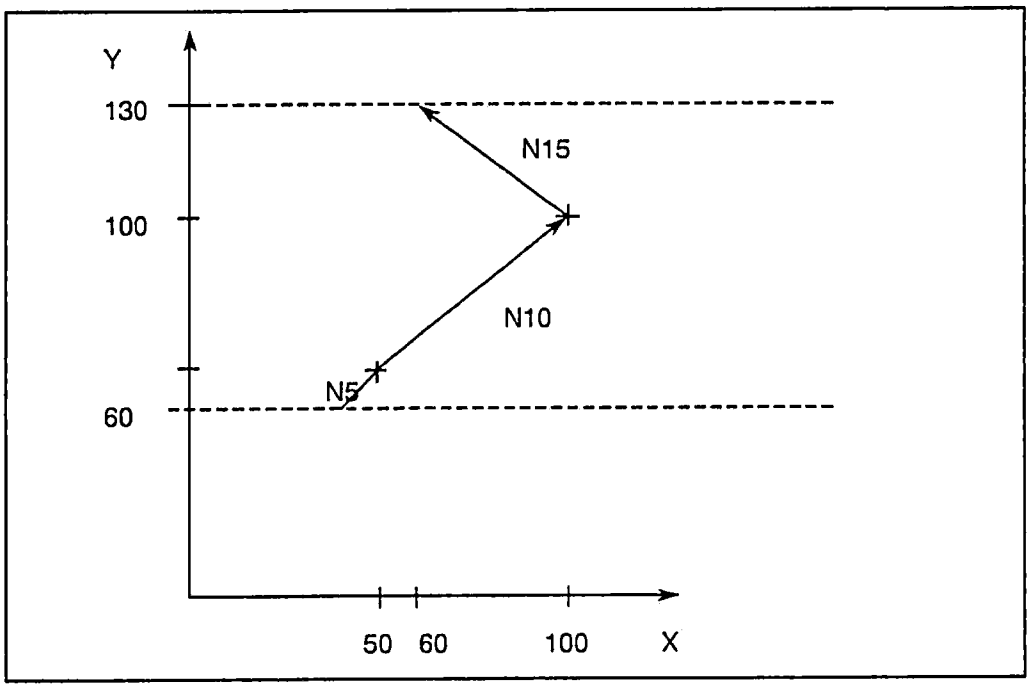


```
N5    G01   X50   Y60   F500   LF
N10   G91   X50   Y40   LF
N15   G90   X60   G91   Y30    LF
N20   M30   LF
```

© Siemens AG 1990 All Rights Reserved 6ZB5 410-0EN02

NC MD-dependent G90/G91 programming										
NC MD			Programming		Axes		Interpolation Parameters		Angles	
5003 Bit 4	5003 Bit 5	5007 Bit 5	G90	G91	Comb.	No comb.	Comb.	No comb.	Comb.	No comb.
	0	0	X	-	A	-	I	-	A	-
0	0	0	-	X	I	-	I	-	A	-
0	0	1	X	-	-	A	I	-	A	-
0	0	1	-	X	-	I	I	-	A	-
0	1	0	X	-	A	-	I	-	A	-
0	1	0	-	X	I	-	I	-	I	-
0	1	1	X	-	-	A	I	-	-	A
0	1	1	-	X	-	I	I	-	-	I
1	0	0	X	-	A	-	A	-	A	-
1	0	0	-	X	I	-	I	-	A	-
1	0	1	X	-	-	A	-	A	A	-
1	0	1	-	X	-	I	-	I	A	-
1	1	0	X	-	A	-	A	-	A	-
1	1	0	-	X	I	-	I	-	-	-
1	1	1	X	-		A	-	A	-	A
1	1	1	-	X		I	-	I	-	I

I = **Incremental programming**
A = **Absolute programming**
Comb. = **Combination of I and A in block**

Bit 3 This bit is used to include two additional tool offset parameters (P8 and P9) (also refer to the Programming Guide).

Bit 2 **Bit 2 = 0** SUBROUTINE END (M17) is forwarded to the PLC as an M function.

Bit 2 = 1 SUBROUTINE END is effective on an NC internal basis only (faster subroutine exit and return).

© Siemens AG 1990 All Rights Reserved 6ZB5 410-0EN02

Bit 1 **Bit 1 = 0** All zero offsets (G54-G59 + ext. ZO) are revoked with G53.

Bit 1 = 1 All zero offsets (G54-G59 + ext. ZO), DRF and PRESET are revoked with G53 or with @706. Tool offset (TO) is not revoked.

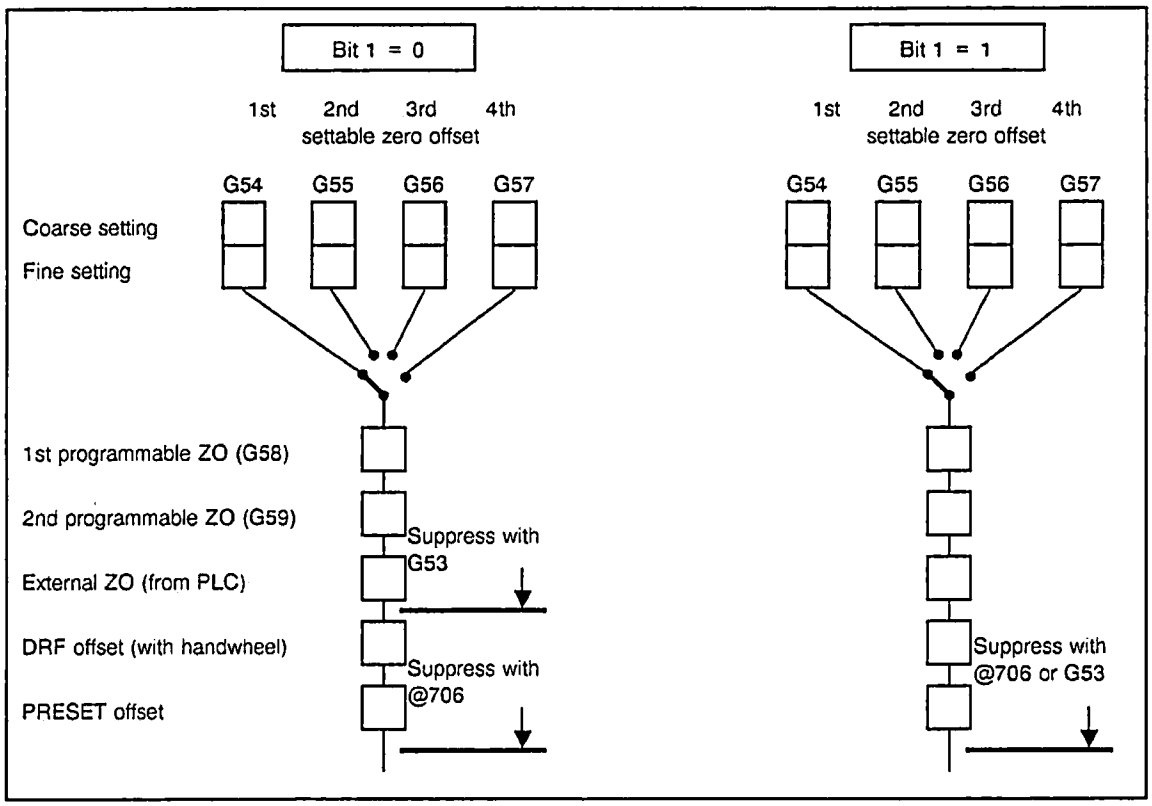

Bit 0 Run the length compensation even for non-programmed axes (840T): If a modification of the tool length compensation (e.g. deselection via D0) produces a traversing path in an axis that is not programmed in this block, traversing is carried out nonetheless. If this bit is not set, traversing is carried out only if the axis has been programmed.

Programming example for the 840T:

```
.
.
.
N5   G18  G0   X0   Z0   LF        D3 ....Type 3 (turning tool)
N10  G01  F200 D3   X10  LF        Length 1   30
N20  Z30  LF                      Length 2   20
.
.
.
```

If the bit is set, the length compensations are run in block N10 already to position Z20.
If the bit is not set, the Z axis is not moved to position Z50 (Z30 + length compensation 1) until block N20 is processed.
This function is active only for 2 axes in the mode group.

© Siemens AG 1990 All Rights Reserved 6ZB5 410-0EN02

NC MD	Bit No. 7	6	5	4	3	2	1	0
5008	PLC displace-ment without NC STOP	REPOS in JOG mode	INC and REF in JOG mode	TO type 0 identical with type 20				

Default value: 0100 0000
Bits 7-5 become active: At once

Bit 7 **Bit 7 = 0** Displacement path from PLC (via command channel) is started in AUTOM./MDA mode only when the preselected NC channel has an NC STOP status. The displacement path is not started if the NC channel is stopped with only a read-in disable at the end of the block.

Bit 7 = 1 Displacement path from PLC (via command channel) is started in AUTOM./MDA mode on a NC STOP or with a read-in disable at the end of the block. The occurrence of a situation in which displacement path from PLC was selected, the read-in disable was set, and the current part program block was prematurely aborted due to an NC STOP (tool breakage, "NC STOP" key, etc.) now becomes feasible, in which case the displacement path from PLC function would be started at once rather than at the end of the block. It is therefore recommended that bit 7 not be set.

Bit 6 **Bit 6 = 0** In the REPOS function (JOG mode), return to the contour is initiated by brief pressing of the relevant direction key. Axis movement can subsequently be halted only via either feed hold or feedrate override 0%.

Bit 6 = 1 Return to the contour is performed only as long as the relevant direction key is held down.

Bit 5 Same as bit 6 but for functions INC1 ... 10 000 and reference point approach (JOG mode).

Bit 4 **Bit 4 = 0** If no TO type is specified, alarm 2060 is issued when called in the NC program.

Bit 4 = 1 If TO type 0 is specified, the tool is interpreted as type 20 and no alarm is issued. The TO type remains 0 in the tool offset memory. Radius and length compensation are assigned as for 20.
Active: In the next block.

© Siemens AG 1990 All Rights Reserved 6ZB5 410-0EN02

NC MD	Bit No. 7	6	5	4	3	2	1	0
5011		Facing axis: Actual value display in diameter	Facing axis: Diameter programmed G91	Facing axis: Diameter programmed G90 TO	Facing axis: Tool length for TO type 1-9 in diameter	Facing axis: INC, DRF handwheel in diameter	Facing axis: Sett. ZO, prog. ZO, ext. ZO in diameter	

Default value 840T : 0101 0000
Default value 840M : 0000 0000

All bits in NC MD 5011 affect the axes defined as transverse axes in NC MD 572*, bit 1. All bits in NC MD 5011 must be set to zero if no transverse axes were defined (i.e. if bit 1 in NC MD 572* is 0).
Active: At once

Bit 6 Machine-related actual value and workpiece-related actual value are displayed in diameter (also see NC SD 5001, bit 0). The actual values in the axis-specific Service displays are still shown as radii.

Bit 5 Diameter programming in G91.

Bit 4 Diameter programming in G90. The TO wear for tool types 1 to 9 is entered and displayed in diameter.

Bit 3 The tool length for tool types 1 to 9 is entered and displayed in diameter.

Bit 2 Pulse weighting is diametral for INC handwheel and DRF handwheel. The DRF offset is displayed in diameter.

Bit 1 Settable ZO and programmable ZO are entered, programmed and displayed in diameter. External ZO, PRESET offset, distance to go and REPOS are displayed in diameter.

NC MD	Bit No. 7	6	5	4	3	2	1	0
5012						MD modification disabled with @4..		

Default value: All bits default to 0
Active: In the next block

Bit 2 Bit 2 can be used to inhibit entry and modification of NC MD, PLC MD and cycles MD using @ commands @4.. (CL800 commands).

© Siemens AG 1990 All Rights Reserved 6ZB5 410-0EN02

NC MD	Bit No. 7	6	5	4	3	2	1	0
5013	Circle radius programming	Polar coordinates (as from SW 2)		Feed not contour-related		M and S address extension for spindle to PLC	Tapping without encoder (G63)	G63 without feedrate reduction

Default value: 1000 0000
Active: In the next block

Bit 7 When bit 7 is set, a circle can be programmed by specifying the radius and/or angle.

Bit 6 Bit 6 = 1 Positions related to a set mid-point can be defined by programming polar coordinates using details of radius and angles.

Bit 4 The programmed feedrate refers to the cutter centre path (tool nose radius centre path).

Example for 840M:

Bit 4 = 0 (Feedrate on contour constant)

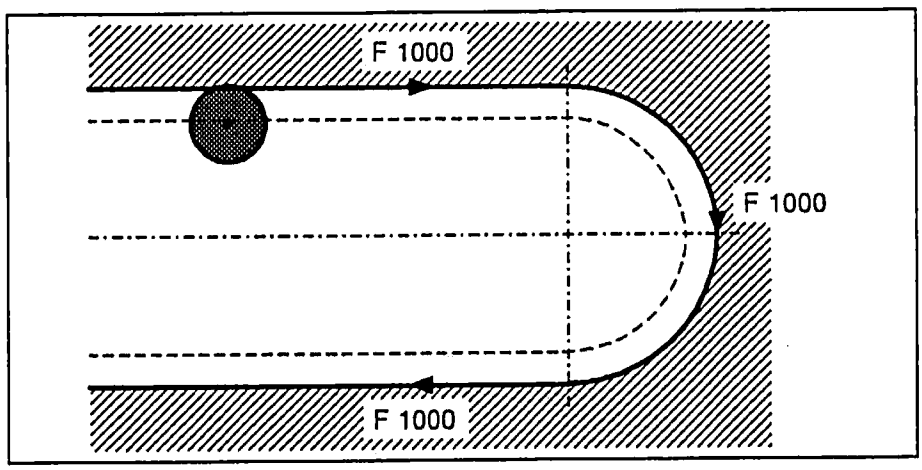

Bit 4 = 1 (Cutter feedrate constant)

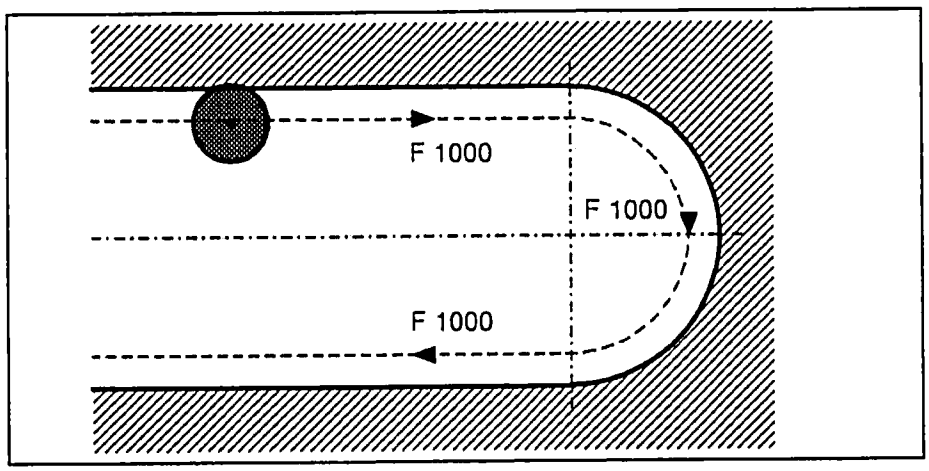

© Siemens AG 1990 All Rights Reserved 6ZB5 410-0EN02

Bit 2 This bit indicates whether the programmed address extension or the M and S address extension automatically generated by the control is to be transferred to the PLC interface (in the control, the address extension is always in force). This bit must be set if the control has more than one spindle.

Bit 1 When using the Siemens tapping cycle L84 (G84) on the SINUMERIK 840M, it is necessary to indicate whether or not the spindle has an encoder.

Bit 1 = 0 The spindle has an encoder (512 or 1024 pulses). G33 (pitch in mm/rev) is therefore used in tapping cycle L84.

Bit 1 = 1 The spindle has no encoder or its encoder is not to be used for cycle L84. G63 (F in mm/min) is therefore used in tapping cycle L84. The programmer must define feedrate and spindle speed so as to produce the correct pitch. Slight errors are taken up by the compensating chuck.

Bit 0 At block boundaries in G63 (tapping without encoder), the programmer can specify whether the new setpoint speed should be output with consideration given to the acceleration characteristic or abruptly.

Bit 0 = 0 Acceleration characteristic
Bit 0 = 1 Abrupt setpoint speed

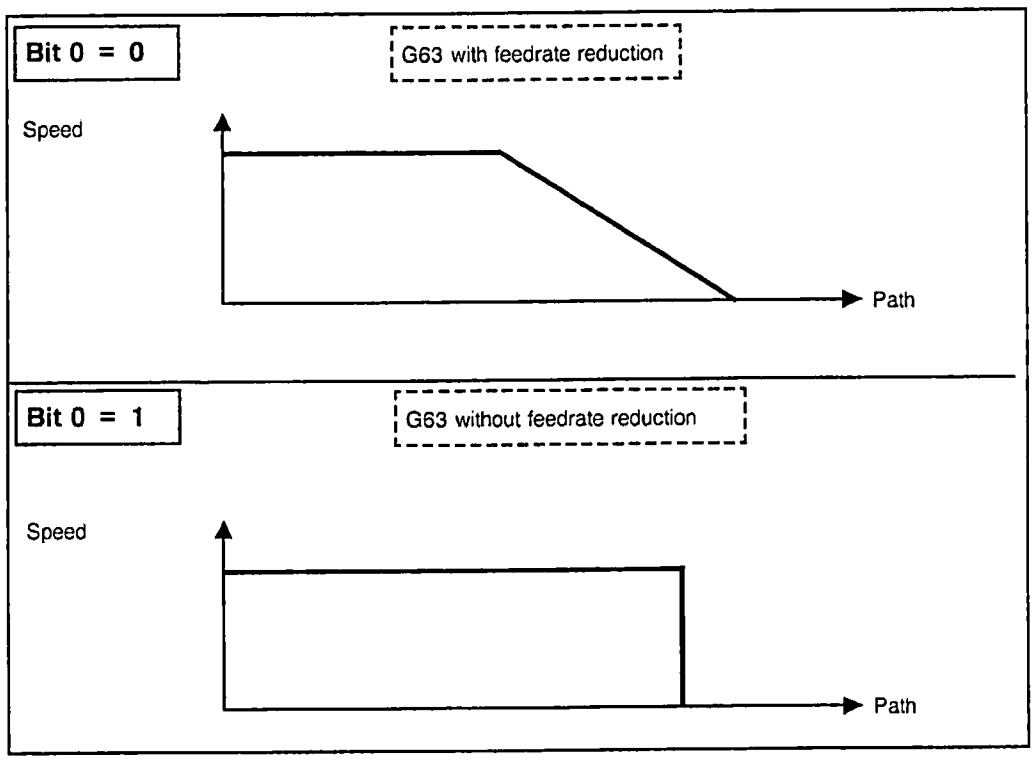

© Siemens AG 1990 All Rights Reserved 6ZB5 410-0EN02

NC MD	Bit No. 7	6	5	4	3	2	1	0
5014	TNRC/ CRC		Cycles (ref. conditioning)					Thread and revolution feedrate G33/G95 (as from SW2)

Default value 840T: 1010 0001
Default value 840M: 1010 0000
Active: In the next block

Bit 7 TNRC/CRC T: Activation of tool nose radius compensation
M: Activation of cutter radius compensation

Bit 5 Cycles: This bit activates the reference conditioning (software module), which is essential for processing stock removal cycle L95.

Bit 0 The spindle encoder is taken as a basic measurement for pitch.

NC MD	Bit No. 7	6	5	4	3	2	1	0
5015		Customer UMS inserted						

Default value: 0000 0010

Bit 6 See WS 800A Manual
UMS = User memory submodule

© Siemens AG 1990 All Rights Reserved 6ZB5 410-0EN02

NC MD	Bit No. 7	6	5	4	3	2	1	0
5024								Abort on contour violation TNRC/ CRC

Default value: 0000 0110

Bit 0 **Bit 0 = 0** Machining is not aborted when the tool nose radius compensation/cutter radius compensation (TNRC/CRC) monitors the contour. Alarm 3021 is issued, but can be cleared with the Acknowledge key.

Bit 0 = 1 Machining is halted when TNRC/CRC is used as contour monitor. Alarm 3021 must be cleared with the Acknowledge key. The program cannot be continued. Machining must be aborted using the RESET key.

© Siemens AG 1990 All Rights Reserved 6ZB5 410-0EN02

NC MD	Bit No. 7	6	5	4	3	2	1	0
5038								Declar-ation of PLC
5039								PLC config. display

Default value: 0000 0001

Because a SINUMERIK 840 is always equipped with a PLC (135 WB), bit 0 of MD 5038 must always be set to 1 and bits 1 to 7 to 0. With 1 in bit 0 of MD 5039, the control indicates that the PLC has been recognized.
Active: On POWER ON

NC MD	Bit No. 7	6	5	4	3	2	1	0
5051								Keyswitch effective for cycles SD

Default value: All 0

By setting the relevant NC MD bit, entries and modifications through the NC operator panel can be prevented with the keyswitch.

Bit 0 Cycles setting data
Active: At once

© Siemens AG 1990 All Rights Reserved 6ZB5 410-0EN02

NC MD	Bit No. 7	6	5	4	3	2	1	0
5060		Transformation channel number (1st block)						
5061		G function for transformation selection (1st block)						
5062 to 5069		Axis name (1st block)						

Default values MD 5060, 5061: All bits default to 0
" MD 5062 to 5069: All bits default to 1

MD for 1st TRANSFORMATION BLOCK.

MD 5060 Channel numbers 1 to 4
Example for channel 3 0000 0011

MD 5061 G function for Transmit
G131 0001 0001
G231 0010 0001
G331 0011 0001

MD 5062-5069 Axis name according to code table, see MD 568*

The default values must be retained if the Transformation option (option B65) is not used. Illegal MD results in issuance of alarm 3087.

Active: All Transmit MDs become active on Power On or on a warm restart
For a detailed description, see Section 12.4.

NC MD	Bit No. 7	6	5	4	3	2	1	0
5070		Transformation channel number (2nd block)						
5071		G function for transformation selection (2nd block)						
5072 to 5079		Axis name (2nd block)						

See MD 5060
MD for 2nd TRANSFORMATION BLOCK.

© Siemens AG 1990 All Rights Reserved 6ZB5 410-0EN02

NC MD	Bit No. 7	6	5	4	3	2	1	0
5080	Transformation channel number (3rd block)							
5081	G function for transformation selection (3rd block)							
5082 to 5089	Axis name (3rd block)							

See MD 5060
MD for 3rd TRANSFORMATION BLOCK.

NC MD	Bit No. 7	6	5	4	3	2	1	0
5090 to 5139	These NC MDs are intended for future expansion only and cannot be used at the present time.							

Default values NC MD: All bits 0 for
5070, 5071, 5080, 5081, 5090, 5091,
5100, 5101, 5110, 5111, 5120, 5121, 5130, 5131

Default values NC MD: All bits 1 for
5072-5079, 5082-5089, 5092-5099,
5102-5109, 5112-5119, 5122-5129, 5132-5139

These NC MDs can be changed during the transformation option. They are verified on Power On and alarm 3087 issued in the event of a verification error.
Active: On POWER ON or on a warm restart

© Siemens AG 1990 All Rights Reserved 6ZB5 410-0EN02

NC MD	Bit No. 7	6	5	4	3	2	1	0
5141 to 5146		Ethernet address						

The Ethernet address is the address of the bus interface module within the network.
Active: On POWER ON

NC MD	Ethernet address (Binary)	Byte	Decimal	Default value
5141	0 0 0 0 1 0 0 0	Byte 1	08	0 0 0 0 1 0 0 0
5142	0 0 0 0 0 0 0 0	Byte 2	00	0 0 0 0 0 0 0 0
5143	0 0 0 0 0 1 1 0	Byte 3	06	0 0 0 0 0 1 1 0
5144	0 0 0 0 0 0 0 1	Byte 4	01	0 0 0 0 0 0 0 1
5145	User assignable	Byte 5	User assignable	0 0 0 0 0 0 0 0
5146	User assignable	Byte 6	User assignable	0 0 0 0 0 0 0 0

The last four bits in the Ethernet address are for the bus interface module.
See Computer Link

© Siemens AG 1990 All Rights Reserved 6ZB5 410-0EN02

NC MD	Bit No. 7	6	5	4	3	2	1	0
5147					Protect EPROM cycles against Override	File transfer: Do not delete read only programs	File transfer: Acknowledge message at once	File transfer: Pos. acknow. of end messages

Default value: All bits default to 0
Active: On POWER ON

Bit 3 **Bit 3 = 0** The subroutine is read in and the CANCEL alarm 3029 "EPROM cycles overwritten by SPF" is issued (no message to host computer)
Bit 2 = 1 The subroutine is not read in and the CANCEL alarm 3240 "Subroutine not read in" is issued.

Caution: The alarm is not returned via the file transfer message sequence.

Bit 2 Do not delete read only programs. Is used in computer links.
Bit 2 = 0 A program is not deleted until it is released (end-of-program and Reset). File transfer is suspended in the interim.
Bit 2 = 1 A read only program is not deleted.

Bit 1 Acknowledge message at once.
Is used in computer links. When this bit is set, the NC forwards a request to the host computer before entering data in NC memory.

Bit 0 Positive acknowledgement of end message.
Is used in computer links. When this bit is set, the NC responds to an erroroneous nd message from the host computer by sending a positive acknowledgement. When the NC transmits an end message, it also expects a positive acknowledgement from the host.

© Siemens AG 1990 All Rights Reserved 6ZB5 410-0EN02

Execution from external (as from Software Version 2)

NC MD	Bit No. 7	6	5	4	3	2	1	0
5148	0	1	0	0	0	1	1	0

NC MD	Bit No. 7	6	5	4	3	2	1	0
5149	0	1	0	0	1	1	0	0

NC MD	Bit No. 7	6	5	4	3	2	1	0
5150	0	1	0	1	0	0	1	0

NC MD	Bit No. 7	6	5	4	3	2	1	0
5151	0	1	0	1	1	1	1	1

As from Software Version 2

These machine data are valid only for "Execution from external"via the computer link interface.

In the 4 bytes, the "Logical partner receiver" is entered to which the request message is forwarded when starting the "Execution from external" function.

These values are entered as ASCII values

The default setting is as described above and is referred to in ASCII as "FLR__".

© Siemens AG 1990 All Rights Reserved

NC MD	Bit No. 7	6	5	4	3	2	1	0
5152	0	0	0	1	0	0	0	1

As from Software Version 2

This machine data is valid only for "Execution from external" via the computer link interface.

In this byte, the "Location receiver" is entered.

The specification "Location receiver" defines the interface module via which the "Logical partner receiver"can be reached.

The following applies: 11H (00010001) equivalent to the 1st interface module
12H (00010010) equivalent to the 2nd interface module

The default setting is the one entered above (11H).

Additional MDs (MD 30, MD 130*, MD 5148-5151) and the "Execution from external" option.

NC MD	Bit No. 7	6	5	4	3	2	1	0
5156 to 5182		Coupled motion combination						

Default value: All bits default to 0

Refer to Section 12 for coupled axis groupings of the coupled motion function.

These bits define which coupled axis groupings from a coupled motion combination and how the coupled motion is performed (clockwise or counter-clockwise).

The 9 possible combinations are programmed with G151 to G159. Each coupled motion combination is defined with 3 NC MD (12 times 2 bits) in accordance with the 12 coupled axis groupings.
Active: RESET

© Siemens AG 1990 All Rights Reserved

NC MD	Bit No. 7	6	5	4	3	2	1	0
5185								Change from G64 to G00

Default value: 0
Active: In the next block

Bit 0

Bit 0 = 1 If a path is traversed in an NC block with G64 and traversing continued in the next block with G00, the NC generates feedrate reduction with coarse exact stop at the end of the block.

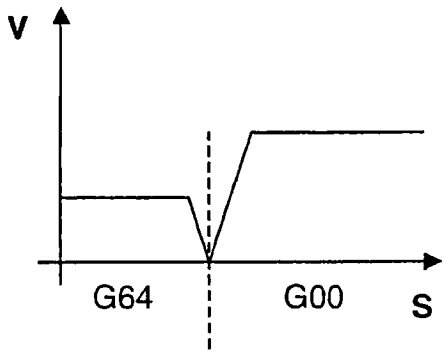

NC generates "coarse" exact stop

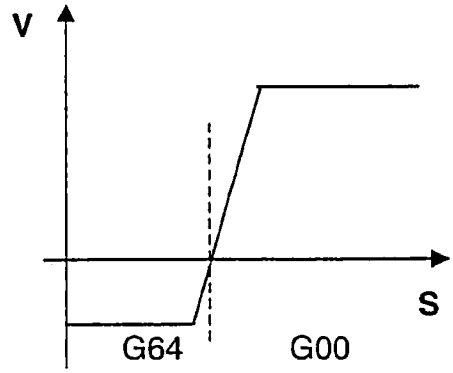

NC generates "coarse" exact stop

Bit 0 = 0

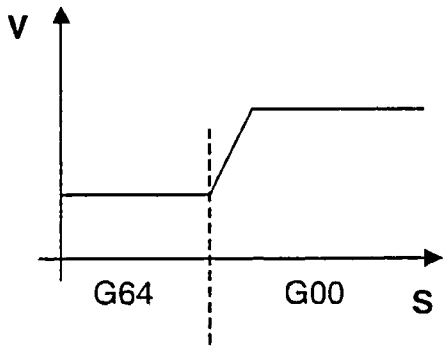

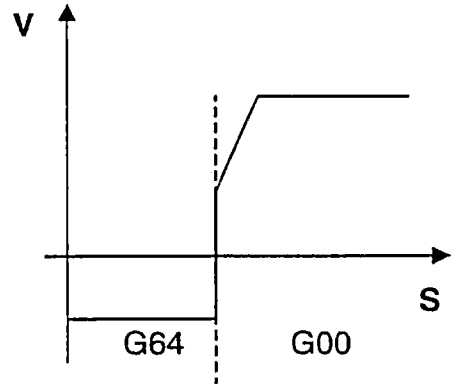

© Siemens AG 1990 All Rights Reserved

NC MD	Bit No. 7	6	5	4	3	2	1	0
5186				FIFO (as from SW 2)	G176 active			

Default value: 0
Active: In the block prior to decoding

Bit 3 **Bit 3 = 0** Programming function G176 cannot be used.

Bit 3 = 1 Programming function G176 is used to 'freeze' the zero offsets for the angles of rotation and the tool length compensations, i.e. these values are not updated in every block. This reduces the amount of time required for block changes. G176 can be revoked with G175 (initial setting).

Bit 4 **Bit 4 = 1** FIFO active (see Section 12 for Functional Description)

NC MD	Bit No. 7	6	5	4	3	2	1	0
5197								Display T/M active (as from SW 2)

Bit 0 **Bit 0 = 0** 840T active
Bit 0 = 1 840M active
Activate in OVERALL RESET mode

© Siemens AG 1990 All Rights Reserved 6ZB5 410-0EN02

NC MD	Bit No. 7	6	5	4	3	2	1	0
5199				Display PLC message texts (as from SW 2)			UMS capacity	

Default value: 0
Active: On POWER ON

Bit 1, 0 The bits must be set in accordance with the user memory submodule.

Bit 1	Bit 0	K byte	Option EPROM	Option RAM
1	0	128	N11	N23
1	1	256	N12	N24

Bit 4 Storing PLC alarm texts in the NC part program memory

The alarm texts are stored in the NC part program memory in the same way as in an ASCII file. The block numbers in this alarm text program correspond to the alarm number to which the text is allocated. This file can be read in and out via the V24/computer link and can be edited, deleted, renamed and copied within the possibilities offered by part program processing with certain restrictions regarding start-up and password.

If available, the alarm texts are taken from the program, otherwise the display submodules search for the alarm text in the UMS.

© Siemens AG 1990 All Rights Reserved 6ZB5 410-0EN02

8.8.2 Spindle-specific MD bits (spindle bits)

NC MD	Bit No. 7	6	5	4	3	2	1	0
520*	Spindle override active for thread cutting	No M19 abort on RESET	M19 with axis movement	M19 oriented spindle stop	Speed in 0.1 rev/ min units	Encoder available	Actual value sign change	Actual value x 2 SW 1 only

Default value		
MD	**840T**	**840M**
5200	0000 0100	0000 0000
5201	0000 0000	0000 0000
5202	0000 0000	0000 0000
5203	0000 0000	0000 0000

Active: On NC STOP

Bit 7 When this bit is set, a change in the following error (due to a change in the spindle speed) results in a thread fault!

Bit 6 M19 is active until the "Acknowledge M19" interface signal is generated, without regard to RESET (or to M02/M30 etc.).

Bit 5 No waiting for positioning of the main spindle; instead, the next program block (which might include axis movement) is executed when M19 is output to the PLC. Positioning (M19) is also terminated with an M3 or M4 in the part program.

Bit 4 Oriented spindle stop
When this bit is set, the NC can stop the spindle at specific positions. S analog and encoder are required. See Section 6.

Bit 3 The programmed S word is given the dimension 0.1 rev/min, i.e. the speed range lies between 0.1 rev/min and 1600 rev/min. This bit is required for actual speed monitoring only; the spindle setpoint (speed) is specified in NC MD 403* to 410*. The actual value is always displayed in whole revolutions. For the actual spindle speed monitor, the minimum speed is always approximately 2 rev/min for the 0.1 rev/min and 1 rev/min settings.

Note:

When using this bit it should be noted that a value is entered in MD 403* that is 10 times greater.

© Siemens AG 1990 All Rights Reserved 6ZB5 410-0EN02

Bit 2 Must be set when a function calling for a spindle encoder is required, e.g.

- G33/34/35 (Thread cutting)
- G 95 (Feedrate per revolution)
- G 96 (Constant cutting speed)
- G 97 (Freeze spindle speed)
- M 19 (Oriented spindle stop)

The control requires a pulse generator (encoder) with 1024 or 512 pulses per revolution. The encoder must be mounted on the spindle. The encoder is allocated in MD 400*, which also activates the hardware monitor for the measuring circuits. If the M19 option is invoked, bit 2 must be set to 1 (also see Section 6).

Bit 1 The sign of the spindle encoder pulses is inverted every time this bit changes its status.

Bit 0 Doubles the encoder pulses. This bit must be set when using a spindle encoder with 512 pulses/revolution.
Valid up to SW 1.

© Siemens AG 1990 All Rights Reserved 6ZB5 410-0EN02

NC MD	Bit No. 7	6	5	4	3	2	1	0
521*	Spindle available	No spindle speed change on RESET	New S value after PLC acknow.		No measuring circuit monitoring (as from SW 2)		Setpoint sign change	

Default value		
MD	**840T**	**840M**
5210	1000 0000	0000 0000
5211	0000 0000	0000 0000
5212	0000 0000	0000 0000
5213	0000 0000	0000 0000

Bit 7 A SINUMERIK 840 system can include up to 4 spindles. Spindles must be defined in ascending order and without gaps.
Active: On POWER ON

Bit 6 Instead of being decelerated to zero speed on a key-initiated reset, mode change or M2 / M30, the spindle continues to rotate at the spindle speed last programmed (spindle override active). In this case, the spindle can be decelerated with the new interface signal "Spindle RESET" (DB 31 DR_{k+1}, bit 5).

EMERGENCY STOP (alarm 2000) and all alarms that result in removal of the "Mode group ready" interface signal decelerate the spindle to zero speed in all cases (mode group-specific).

The "Spindle RESET" signal is effective only when the channel to which the spindle is currently allocated (DB 31 DL_{k+1}, bits 0 to 4) is in the RESET state.

This bit has no effect on the M19 function (spindle positioning); only NC MD 520*, bit 6, is relevant.
Active: In next block

Bit 5 A newly programmed spindle speed, which requires a gear change (automatic gear selection in the NC), is not accepted until the gear change has been acknowledged over the interface (DB31, DRk, bit 7), thus preventing an unintentional speed increase in the old gear prior to a gear change.
Active: NC STOP

Bit 3 If the bit is **set**, no measuring circuit monitoring is performed.
Examples for measuring circuit monitoring:
- Check for encoder line breakage
- Check for contamination, if the encoder has a signal for contamination or if the amplitude can be monitored (with unconditioned signal encoders).

Bit 1 Is used to match the programmed direction of rotation (M03 and M04) to the main spindle's direction of rotation. When bit 1 = 0, a positive setpoint speed is output for M03. The spindle's direction of rotation can be reversed over the PLC with interface signal "Invert M3/M4" (DB31 DR k + 1).
Active: NC STOP

© Siemens AG 1990 All Rights Reserved 6ZB5 410-0EN02

NC MD	Bit No. 7	6	5	4	3	2	1	0
524*						Position control resolution (As from SW 2)		

Active: At once

Bits 0 to 3: Spindle measuring system resolution

The measuring system resolution for the spindle set with MD 425* applies exclusively to the evaluation of one increment of the actual part position of the spindle for calculating the setpoint position of the following axis.

The measuring system resolution chosen is matched to the rotary encoder using the NC machine data MD 455* and 456*.

The coding of the possible measuring system resolutions can be taken from the table giving the position control resolution of the rotary axes (see MD 1800* bit 0 to 3).

Note:

The spindle measuring system resolution for M19, G33, G95 etc. continues to be

$$\frac{360}{4 \times 1024} \text{ degrees}$$

© Siemens AG 1990 All Rights Reserved 6ZB5 410-0EN02

8.8.3 Channel-specific MD bits 1 (channel bits)

NC MD	Bit No. 7	6	5	4	3	2	1	0
540*	No transform-ation deselect on RESET	F value in m/min					G function to PLC	Aux. functions to PLC

Default value		
MD	**840T**	**840M**
5400	0000 0101	0000 0001
5401	0000 0001	0000 0001
5402	0000 0001	0000 0001
5403	0000 0001	0000 0001

Bit 7 A key-initiated Reset, mode change or M2/M30 does not deselect transformation (TRANSMIT).
Active: RESET

Note:
Transformation is always deselected in 'Reference point approach' mode.

Bit 6 Causes the F value to be programmed in m/min.
This MD affects all metric input systems. The maximum axial speeds specified in the machine data are not affected (input unit is still 'units').

Programming of F10 → Speed 10 m/min

The feedrate display depends on the status of this bit. The feedrate for F external and dry run is not converted into m/min. This MD has no effect on "inch" systems, i.e. the feedrate is always defined in inches/min.
Active: In the next block

Bit 1 **Bit 1 = 0** Inhibits G function output to the PLC
Bit 0 **Bit 0 = 0** Inhibits auxiliary function output to the PLC
Auxiliary functions are: M, S, T, H, D. Use is recommended for computational channels.

For output of the programmed F value to the PLC, see NC MD 544*, bit 0.
Active: In the next block

© Siemens AG 1990 All Rights Reserved 6ZB5 410-0EN02

NC MD	Bit No. 7	6	5	4	3	2	1	0
542*	Fast auxiliary function output to the PLC				T	S	F	D

All auxiliary functions M, S, T, D, H and F are always output to the PLC under acknowledgement control.

For slow auxiliary function output (bits 0 to 3 = 0), the auxiliary function is not acknowledged by the PLC until the cyclic user program (UB1) has been run once.

For fast auxiliary function output (bits 0 to 3 = 1), the auxiliary function is acknowledged by the PLC already after the basic program has been run once. The auxiliary function can be safely recognized in the PLC user program, but read-in disable, feed hold, etc. cannot take effect in the same NC block.

Bits 0 to 3: = 1: Fast auxiliary function output to the PLC
Bits 0 to 3: = 0: Slow auxiliary function output to the PLC (default setting).

Note:

The auxiliary functions M and H can be declared as fast auxiliary functions by programming "–" (e.g. M-03) (see Programming Guide).

© Siemens AG 1990 All Rights Reserved

NC MD	Bit No. 7	6	5	4	3	2	1	0
544*	Output of auxiliary functions in BCD: F	H	D	T	S	M		No F value output to PLC

Default value: All bits default to 0
Active: In the next block

Bit 0 F value output to the PLC is deselected via machine data. This makes it possible to improve the time required for block changes involving travel blocks with F values, as it is not necessary to wait for an acknowledgement from the PLC (e.g. 5D machining).

Bit 2-7 **Bit 2-7 = 1** The auxiliary function is output to the PLC in BCD. Bit 2 may not be set to 1 because of the basic PLC program.

Bit 2-7 = 0 The auxiliary function is output to the PLC in hexadecimal (binary).

NC MD	Bit No. 7	6	5	4	3	2	1	0
546*	Aux. functions that are output immediately instead of being collected during block search: F	H	D	T	S	M		No aux. function output during block search

Default value: All bits default to 0
Active: At once

Bit 7, 6, 5, 4, 3, 2
The auxiliary function types defined by these bits are not collected during a block search, but are output immediately (may result in PLC based triggering of several switching functions in succession).

Bit 0 When this bit is set, all auxiliary functions (M, S, T, D, H and F) encountered during a block search are skipped and ignored (no output to PLC and no internal reaction).

© Siemens AG 1990 All Rights Reserved 6ZB5 410-0EN02

	Bit patterns for bits ...							Description
	7	6	5	4	3	2	0	
Example a		Irrelevant					1	No output of auxiliary functions
Example b	0	0	0	0	0	0	0	All auxiliary functions are collected and the last is output following NC START
Example c	1	1	1	1	1	1	0	All auxiliary functions are output during block search
Example d	0	0	0	0	0	1	0	M functions are output during block search; F, H, D, T and S functions are collected and the last function output following NC START.

All auxiliary functions that were collected during block search are activated with NC START at the end of the block search and output to the PLC. The 'collection' procedure ensures that only the last F, H, D, T, S and M function becomes active.

© Siemens AG 1990 All Rights Reserved 6ZB5 410-0EN02

NC MD	Bit No. 7	6	5	4	3	2	1	0
548*	Name of the abscissa (horizontal axis) (same code as for axis definition)							
550*	Name of the ordinate (perpendicular axis) (same code as for axis definition)							
552*	Name of the applicate (vertical axis) (same code as for axis definition)							

Default value		
MD	**840T**	**840M**
548*	0000 0000	0000 0000
550*	0000 0010	0000 0001
552	0000 0010	0000 0010

Active: In the next block

Code see axis definition in MD 568*

MD 548*, 550* and 552* specify the axes which form G17, G18 and G19. On the 840 T, plane G18 is defined with MD 548* (x) and 552* (Z). 550* specifies the axis in which length L1 is to take effect during drilling and milling.

NC MD	Axis	Name of the axis according to DIN	
		840T	**840M**
548*	Abscissa, 1st axis	Z	X
550*	Ordinate, 2nd axis	X	Y
552*	Applicate, 3rd axis	X	Z

The reset state of the plane can be modified in NC MD 110* (the default on the 840T is G18, on the 840M G17). The allocation of the axes to tool length can be modified in the NC program with G16.

© Siemens AG 1990 All Rights Reserved 6ZB5 410-0EN02

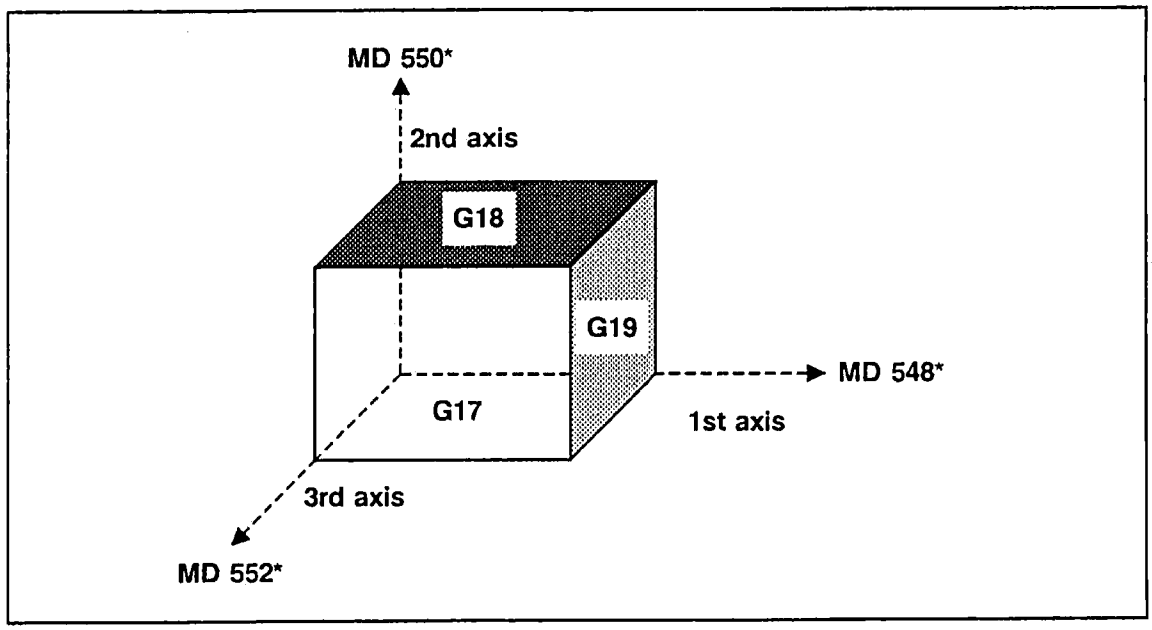

PLANE	G17	G18	G19
Axis no.	1	3	2
	2	1	3
	3	2	1

NC MD	Bit No. 7	6	5	4	3	2	1	0
554*	Axis with constant cutting speed G96							

Default value: All bits default to 0
Active: When the function is reprogrammed

The **number** of the axis with which the constant cutting speed (G96) is to be attained must be specified (normally the transverse axis).
The axis number must be specified as follows:

1st axis ... 0000 0000
2nd axis ... 0000 0001
3rd axis ... 0000 0010
4th axis ... 0000 0011
.
.
.
8th axis ... 0000 1000

© Siemens AG 1990 All Rights Reserved 6ZB5 410-0EN02

NC MD	Bit No. 7	6	5	4	3	2	1	0
558*								Supple-ment axis after block search

Default value: 0

Bit 0 **Bit 0 = 0** Following the block search, only the axes programmed in the destination block are traversed. It is thus possible to modify the TO and the ZO prior to NC START.

Bit 0 = 1 The "3D interpolation" option must be programmed. Following the block search, not only the axes programmed in the destination block are traversed, but also as many as 5 additional axes, as long as these axes were previously programmed. If more than 5 axes were programmed, the first 5 must be traversed in REPOS mode. Tool offset, current D no. or zero offset must not be modified prior to NC START.

Active: In the next block

© Siemens AG 1990 All Rights Reserved 6ZB5 410-0EN02

NC MD
Channel-specific MD bits 2

NC MD	Bit No. 7	6	5	4	3	2	1	0
9000	Channel-specific axis allocation for multi-channel display (channel 1)							
	Axis 8	Axis 7	Axis 6	Axis 5	Axis 4	Axis 3	Axis 2	Axis 1

NC MD	Bit No. 7	6	5	4	3	2	1	0
9001	Channel-specific axis allocation for multi-channel display (channel 2)							
	Axis 8	Axis 7	Axis 6	Axis 5	Axis 4	Axis 3	Axis 2	Axis 1

NC MD	Bit No. 7	6	5	4	3	2	1	0
9002	Channel-specific axis allocation for multi-channel display (channel 3)							
	Axis 8	Axis 7	Axis 6	Axis 5	Axis 4	Axis 3	Axis 2	Axis 1

NC MD	Bit No. 7	6	5	4	3	2	1	0
9003	Channel-specific axis allocation for multi-channel display (channel 4)							
	Axis 8	Axis 7	Axis 6	Axis 5	Axis 4	Axis 3	Axis 2	Axis 1

NC MD	Bit No. 7	6	5	4	3	2	1	0
9020	Channel-specific axis allocation for multi-channel display (channel 1)							
	Axis	Axis	Axis	Axis	Axis	Axis	Axis	Axis 9

© Siemens AG 1990 All Rights Reserved

NC MD	Bit No. 7	6	5	4	3	2	1	0
9021	Channel-specific axis allocation for multi-channel display (channel 2)							
	Axis	Axis	Axis	Axis	Axis	Axis	Axis	Axis 9

NC MD	Bit No. 7	6	5	4	3	2	1	0
9022	Channel-specific axis allocation for multi-channel display (channel 3)							
	Axis	Axis	Axis	Axis	Axis	Axis	Axis	Axis 9

NC MD	Bit No. 7	6	5	4	3	2	1	0
9023	Channel-specific axis allocation for multi-channel display (channel 4)							
	Axis	Axis	Axis	Axis	Axis	Axis	Axis	Axis 9

As from Software Version 2

Default value: 0
Valid only when the "Multi-channel display" option is set (MDs 9000 to 9023).

© Siemens AG 1990 All Rights Reserved

NC MD	Bit No. 7	6	5	4	3	2	1	0
9100	Channel-specific spindle allocation for multi-channel display (channel 1)							
	Axis	Axis	Axis	Axis	Axis 4	Axis 3	Axis 2	Axis 1

NC MD	Bit No. 7	6	5	4	3	2	1	0
9101	Channel-specific spindle allocation for multi-channel display (channel 2)							
	Axis	Axis	Axis	Axis	Axis 4	Axis 3	Axis 2	Axis 1

NC MD	Bit No. 7	6	5	4	3	2	1	0
9102	Channel-specific spindle allocation for multi-channel display (channel 3)							
	Axis	Axis	Axis	Axis	Axis 4	Axis 3	Axis 2	Axis 1

NC MD	Bit No. 7	6	5	4	3	2	1	0
9103	Channel-specific spindle allocation for multi-channel display (channel 4)							
	Axis	Axis	Axis	Axis	Axis 4	Axis 3	Axis 2	Axis 1

As from Software Version 2

Default value: 0
Valid only when the "Multi-channel display" option is set (MDs 9100 to 9103).

© Siemens AG 1990 All Rights Reserved

Channel-specific MD bits:

1st channel	MD: 9140	(bit 0)
2nd channel	MD: 9141	
3rd channel	MD: 9142	
4th channel	MD: 9143	

Bit 0 = 0 → Channel without FIFO
Bit 0 = 1 → Channel with FIFO

NC MD	Bit No. 7	6	5	4	3	2	1	0
914*								Channel with FIFO as from SW 2

Default value: all bits default to 0
Active: On warm restart/Power On

If FIFO is selected for the four MDs only once, the entire storage space (30 Kbytes) is allocated to the respective channel.

If two FIFO channels are selected, these two channels share the available storage space (15 Kbytes per channel).

If more than two channels are defined, an error message ("Too many FIFO channels defined" alarm) is issued.

© Siemens AG 1990 All Rights Reserved

8.8.4 Axis-specific MD bits 1 (axial bits 1)

NC MD	Bit No. 7	6	5	4	3	2	1	0
560*	Act.-value display modulo 360 deg.	Automatic ref. point approach	Software limit switches active	No start inhibit for ref. point	Rounding for rotary axes	Rounding to whole/half degrees		No measuring-circuit monitoring

Default value: MD 5600-5611 0010 0000

Bit 7 For rotary axes only (NC MD 564*, bits 5-1).
The actual-value display jumps from 359.999 to 0 degrees after one revolution of the rotary axis.
Rotary axes, see also Section 12.
Active: On RESET

Bit 6 **Bit 6 = 0** If the axis is between the reference point cam and EMERGENCY STOP when the control is powered up, the axis moves to EMERGENCY STOP during reference point approach, as the control cannot detect from the "Deceleration" interface signal whether the axis is ahead of or behind the reference point cam (also see Section 5.5).

Bit 6 = 1 The NC can detect precisely the direction in which the reference point lies from the "Deceleration" interface signal, as the reference point extends up to the traversing limit (also see Section 5.5).
Active: On NC STOP

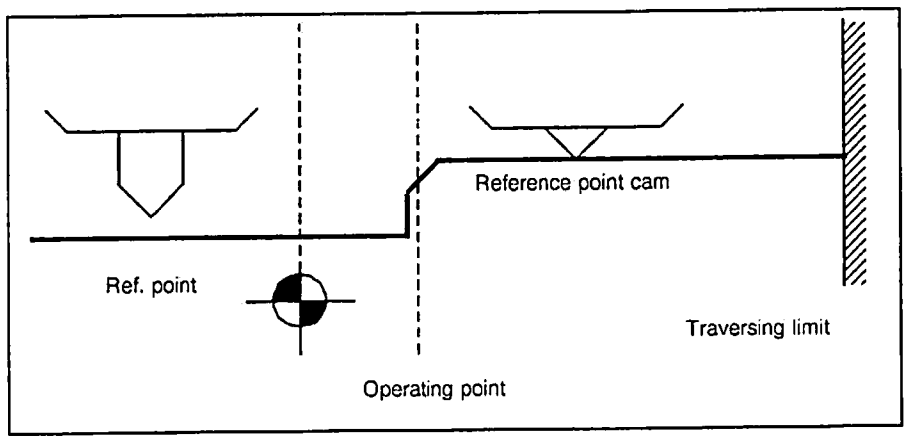

Bit 5 **Bit 5 = 0** The software limit switches defined in NC MD 224* to 236* are overrun without a reaction of any kind. The working field limitation (setting data) is not in force.
Active: On RESET

© Siemens AG 1990 All Rights Reserved

Bit 4 The program can be started with NC START without approach to the reference point of this axis.

Bit 3 of NC MD 5004 can be used to indicate whether reference point approach is required prior to program start; this bit applies to all axes and channels.
Active: On NC STOP

Bit 3 and 2 May be set for rotary axes only! In JOG mode, bit 2 is used to choose between rounding (positioning) to whole or to half degrees. Bit 2 = 1 means rounding to whole degrees.

In AUTOMATIC or MDA mode, alarm 2064 is displayed for programmed positions which do not represent a movement of 0.5 or 1 degree (rounding for rotary axis incorrectly programmed). The occurrence of axis-specific, spindle-specific or channel-specific alarms which result in opening of the closed position control loop (removal of MODE GROUP READY), on RESET and on EMERGENCY STOP, the control is no longer able to position the rotary axis to a half or a whole degree. In this case, the rotary axis must not be lowered into the serration.
Active: On NC STOP

Bit 0 Alarm 132* is disabled. The cables to the encoder are no longer monitored for cable breaks. An encoder failure or cable break is therefore not immediately flagged, but rather with a greater delay in form of alarm 104*, 112* or 116*.
Active: On NC STOP

© Siemens AG 1990 All Rights Reserved 6ZB5 410-0EN02

NC MD	Bit No. 7	6	5	4	3	2	1	0
564*	Axis exists	Fictitious axis	Position control for rotary axis	Division axis	Actual values division-related	Actual value sign change	Setpoint sign change	Ref. point in neg. direction

Default Value		
MD	**T**	**M**
5640	1000 0010	1000 0010
5641	1000 0010	1000 0010
5642	0	1000 0010
5643	0	0
5644 . . . 5651	0 . . . 0	0 . . . 0

840T: Bit 7 in MD 5640 and 5641 must be "1".
840M: Bit 7 in MD 5640, 5641 and 5642 must be "1".

Bit 7 When this bit is set, the axis is displayed on the monitor screen and the position controller and measuring circuit monitor are activated. PLC MD 6016 and 6017 must be observed as regards the interface.
Active: Power on

Bit 6 Fictitious axes are required for coordinate transformation (see NC MD 5060 to 5069). Fictitious axes have no position controller (NC MD 200* irrelevant) and require no measuring circuit. Fictitious axes must be linear axes. See Section 12.
Active: Power on

Bit 5 The axis is declared as rotary axis. Position control thus begins in degrees, and G70/G71 is disabled for rotary axis programming. For further details on rotary axes, also see Section 12.
Active: On NC STOP

Bit 4 Bit 4 ("Division axis") declares a linear or rotary axis to be a division axis, and thus activates NC MD
Active: At once

© Siemens AG 1990 All Rights Reserved 6ZB5 410-0EN02

Bit 3 The actual value (actual position display) is converted into division positions. A division position < 1 is not possible (applies to both rotary and linear axes). The actual value display in the Service data is not converted into division positions.

If bit 3 is not set for a division axis, the position is assigned (over command channel) in division positions but the actual value is displayed in mm or inches. Also see Section 12.
Active: At once

Bit 2 The signs of the measuring-system pulses can be inverted by changing the state of this bit (this is necessary when the axis traverses uncontrollably due to an incorrect position control direction).
Active: On NC STOP

Bit 1 A change in the state of the bit changes the polarity of the speed controller's setpoint voltage (necessary when the axis moves in a direction which is 'mechanically' incorrect).
Active: On RESET

Bit 0 **Bit 0 = 0** Start reference point approach with " + " key

Bit 0 = 1 Start reference point approach with " - " key
Active: On RESET

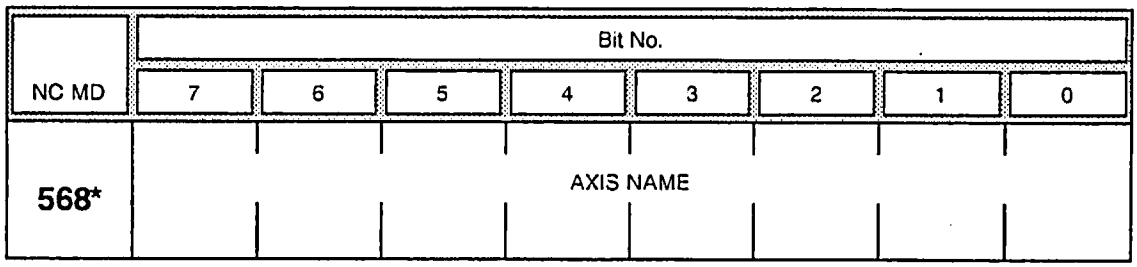

Default Value		
MD	**T**	**M**
5680	0000 0000	0000 0000
5681	0000 0010	0000 0001
5682	0	0000 0010
5683	0	0
.	.	.
.	.	.
.	.	.
5691	0	0

© Siemens AG 1990 All Rights Reserved 6ZB5 410-0EN02

The axis name must be defined according to the table.

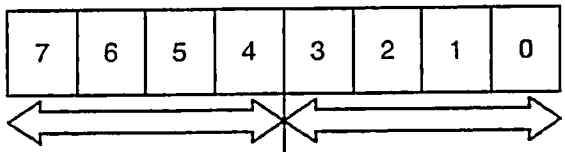

Extended address (address number)

Code:
blank = 0000
1 = 0001
2 = 0010
3 = 0011
4 = 0100
5 = 0101
6 = 0110
7 = 0111
8 = 1000
9 = 1001
10 = 1010
11 = 1011
12 = 1100
13 = 1101
14 = 1111
15 = 1111

Address name

Code:
X = 0000
Y = 0001
Z = 0010
A = 0011
B = 0100
C = 0101
U = 0110
V = 0111
W = 1000
Q = 1001
E = 1010

Example: 0000 0010 = Z
0001 1001 = Q1

The names in MD 5000, MD 5001 and 568* must not overlap. Identical address names with different address extensions are not regarded as overlaps.
For a list of permissible names, see NC MD 5000
Active: In the next block

© Siemens AG 1990 All Rights Reserved 6ZB5 410-0EN02

NC MD	Bit No. 7	6	5	4	3	2	1	0
572*				Traverse rotary axis modulo 360 deg.	TO mirroring for transverse axis	Modulo 360° prog. of rotary axis	Trans-verse axis	Axis without TO in case of PRESET

Default value: 0000 1010 only on the 840T; otherwise, all bits default to 0.
Active: In the next block

Bit 4 When G90 is programmed, the rotary axis is approached with the programmed direction of traverse, allowance being made for the zero offset, tool offset etc. See Section 12.

Bit 3 The tool length compensations and the position of the tool nose are mirrored for tool types 1 to 9 (lathe tools) depending on the axis-specific bit.

Bit 2 **Bit = 0** The programming of the path and traversing of the rotary axis are the same as for linear axes.
Bit = 1 Programming of the rotary axis can be absolute (G90) up to 360 degrees. The programmed sign defines the direction of travel. On a program start following a block search and with G68, the axis is traversed to the programmed position over the shortest path. See Section 12.

Bit 1 On the 840T, the standard X axis is a transverse axis with diametral programming. This bit activates the bits set in NC MD 5011.

Bit 0 No tool offsets are computed in this axis in the case of PRESET.

NC MD	Bit No. 7	6	5	4	3	2	1	0
576*					Axis disabled for channel 4	3	2	1

Default value: All 0

Bit 3, 2, 1, 0

The channel for which a bit is set cannot traverse the axis. Alarm 3014 ("Axis disabled in channel") is displayed in the event of an error. The Disable is effective in AUTOMATIC and MDI AUTOMATIC mode only (also via command channel with absolute/incremental dimension from PLC).
Active: In the next block

© Siemens AG 1990 All Rights Reserved 6ZB5 410-0EN02

8.8.5 Axis-specific MD bits 2 (axial bits 2)

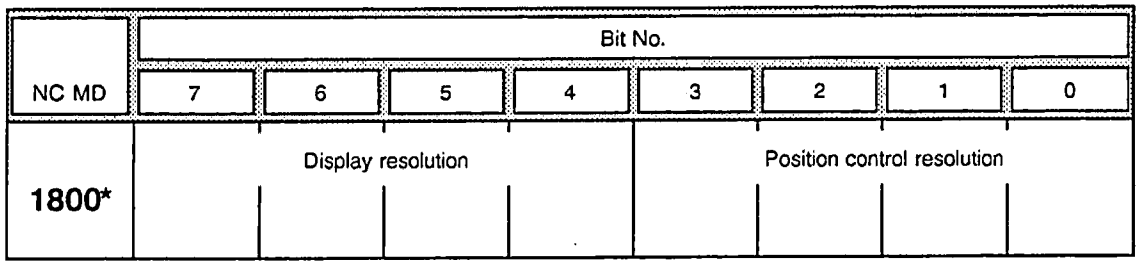

Default value: 0100 0100

Bit				mm/degrees		Must be rotary axis
7	6	5	4	Display resolution		
3	2	1	0		Position control resolution	
0	0	0	0	10^{-1}	$1/2 \times 10^{-1}$	x
1	0	0	0	10^{-2}	$1/2 \times 10^{-2}$	-
0	1	0	0	10^{-3}	$1/2 \times 10^{-3}$	-
0	0	1	0	10^{-4}	$1/2 \times 10^{-4}$	-
1	0	1	0	10^{-5}	$1/2 \times 10^{-5}$	x
1	1	0	0	-	2×10^{-4}	-

Bit				Inches/degrees		Must be rotary axis
7	6	5	4	Display resolution		
3	2	1	0		Position control resolution	
0	0	0	1	10^{-1}	$1/2 \times 10^{-1}$	x
1	0	0	1	10^{-2}	$1/2 \times 10^{-2}$	x
0	1	0	1	10^{-3}	$1/2 \times 10^{-3}$	-
1	1	0	1	10^{-4}	$1/2 \times 10^{-4}$	
1	0	1	1	10^{-5}	$1/2 \times 10^{-5}$	-
0	0	1	1	-	2×10^{-4}	-

The display resolution determines the path of travel in "incremental feed" mode.
Input resolution see NC MD 5002.
For possible combinations, see Section 5.5.

Active: On NC STOP

© Siemens AG 1990 All Rights Reserved 6ZB5 410-0EN02

NC MD	Bit No. 7	6	5	4	3	2	1	0
1808*					Absolute offset valid (as from SW 2)			SIPOS absolute encoder exists (as from SW 2)

Bit 0 = 1 The NC axis is equipped with a SIPOS absolute encoder.

Bit 3 = 1 The value in NC MD 396* for the absolute value offset is valid. When the value is valid (bit 1 = 3) "Reference point reached" is immediately set for this axis.

When the SIPOS absolute encoder is used, the following NC machine data must be taken into account:

Axial machine data:

MD 240* Reference point ordinate
MD 396* Absolute offset

Procedure on reference point approach

When bit 0 of MD 1808* "Axis with SIPOS absolute encoder" is set, two cases must be considered for reference point approach.

Case 1: MD 1808* bit 3 = 0

When the bit "Absolute offset valid" is not set, reference point approach is carried out as for an axis without absolute encoder. On "Reference point reached", the calculated absolute offset is transferred to the axial MD 396* and MD 1808* bit 3 "Absolute offset valid" is set for the relevant axis.
The absolute offset is calculated on the basis of the equation

Machine system = SIPOS system + absolute offset

or

Absolute offset = machine system - SIPOS system

The following applies

Machine system = desired absolute position = reference point ordinate

and

SIPOS system = displayed absolute position (actual value)

Note:

If a value other than 0 has been entered in MD 396*, this value must be taken into account, as it is contained in the SIPOS system (= displayed actual value).

© Siemens AG 1990 All Rights Reserved

Case 2: MD 1808* bit 3 = 1

When the bit "Absolute offset valid" is set, reference point approach is suppressed, until the bit is reset by the user.

Note:

When the function G74 "Reference point approach from part program" is used, no reference point approach is carried out for the second case and processing is continued with the next block.

Procedure on warm restart (POWER ON)

When bit 0 of MD 1808* "Axis with absolute encoder" is set, MD 1808* bit 3 "Absolute offset valid" is checked for the relevant axis. If this bit is also set, the axial interface signal "Reference point approach" is set already on warm restart.

Special case "parking axis"

The axial interface signal "Parking axis" also causes the interface signal "Reference point reached" to be deleted for an axis with SIPOS absolute encoder. When bit 3 of MD 1808* is set, a new reference point approach is suppressed. The absolute value is not transferred until POWER ON.

Note:

Reference point approach can be carried out again when MD 1808* bit 3 is deleted.

NC MD	Bit No. 7	6	5	4	3	2	1	0
1820*		Pulse encoder monitoring on (SW 2)					Zero monitoring on (SW 2)	

1820* bit 1 Zero monitoring on

= 1 Monitoring is performed to detect whether pulses have been lost between two zero mark passes.
If so, alarm 140* is triggered (also see description of alarm 140*).

= 0 Monitoring switched off

1820* bit 6 Pulse encoder monitoring on

= 1 Monitoring is carried out to determine how many directional changes have occurred between two measuring clock pulses. If too many directional changes are detected, alarm 140* is triggered (also see description of alarm 140*).

= 0 Monitoring switched off.

© Siemens AG 1990 All Rights Reserved

8.8.6 Leadscrew error compensation bits (compensation flags)

MD No.	Bit No. 7	6	5	4	3	2	1	0
6000	C point 4 yes / no	+ / –	C point 3 yes / no	+ / –	C point 2 yes / no	+ / –	C point 1 yes / no	+ / –
6001	C point 8 yes / no	+ / –	C point 7 yes / no	+ / –	C point 6 yes / no	+ / –	C point 5 yes / no	+ / –
6002	C point 12 yes / no	+ / –	C point 11 yes / no	+ / –	C point 10 yes / no	+ / –	C point 9 yes / no	+ / –
-//-								
-//-								
-//-								
-//-								
-//-								
-//-								
-//-								
-//-								
-//-								
-//-								
-//-								
6248	C point 996 yes / no	+ / –	C point 995 yes / no	+ / –	C point 994 yes / no	+ / –	C point 993 yes / no	+ / –
6249	C point 1000 yes / no	+ / –	C point 999 yes / no	+ / –	C point 998 yes / no	+ / –	C point 997 yes / no	+ / –

-	Bit = 0	Negative compensation
+	Bit = 1	Positive compensation
no	Bit = 0	No compensation
yes	Bit = 1	No compensation

All MD for leadscrew error compensation become effective on Power On and following completion of reference point approach. See Section 12.

Default value: All 0

© Siemens AG 1990 All Rights Reserved 6ZB5 410-0EN02

8.9 Setting data/data interfaces

8.9.1 NC setting data (NC SD)

Breakdown of NC setting data

SD No. 0 – 999: General values*
SD No. 2000 – 2999: Channel-specific values*
SD No. 3000 – 3999: Axis-specific values*
SD No. 4000 – 4999: Spindle-specific value*
SD No. 5000 – 5599: General bits
SD No. 5600 – 5799: Axis-specific bits

General values

SD No.	Designation	Default value	Maximum input value	Input unit
0	Dry run feedrate	0	24000	1000 units/min
1	Smoothing constant for thread	0	5	
5	PLC alarm text file	1	9999	–
⋮	⋮	⋮	⋮	⋮
9	Incremental value INC variable	50	± 999999	mm

Channel-specific values

SD No.	Designation	Default value	Maximum input value	Input unit
200*	Scale factor	1	99999	-
202*	Start angle for thread	0	999.99999	10^{-5} degrees

Axis-specific values (max. 9 axes)

SD No.	Designation	Default value	Maximum input value	Input unit
300*	Minimum working area limitation	-99999.999	± 99999.999	mm
304*	Maximum working area limitation	99999.999	± 99999.999	mm
308*				
312*	Scale centre NC	0	± 99999.999	mm
316*				

* = 0 → axis 1
: : :
8 → axis 9

* Display on the screen is in plaintext

© Siemens AG 1990 All Rights Reserved

8.9.2 Spindle-specific setting data

401*	Programmable spindle speed limitation for G96		401*
Default value	Lower input limit	Upper input limit	Units
0	0	SW 1 16 000 SW 2 99 999	rev/min or 0.1 rev/min

The spindle speed is limited at constant cutting speed (G96) by the programmed spindle speed limitation. The setting data can be modified in the program using the command G92..

Units

The unit of the input values is defined by MD 520*, bit 3:

Bit 3 = 0: Unit rev/min
Bit 3 = 1: Unit 0.1 rev/min

Note

The maximum spindle speed value is determined by the minimum of the following values:

- MD 403* to 410* "Maximum speed" per gear ratio
- MD 451* "Maximum chuck speed"
- SD 401* "Programmable spindle speed limitation with G96"; programmed with G92
- SD 403* "Programmable spindle speed limitation"; programmed with G26

© Siemens AG 1990 All Rights Reserved

402*	Spindle position with M19		402*
Default value	Lower input value	Upper input limit	Units
0	0	SW 1 35 99 SW 2 35 999	rev/min 0.01°

This setting data specifies the angle to which the spindle is positioned when M19 is programmed in the part program (or MDA, Overstore) without specifying an S value.

If an S value is programmed with M19, it is transferred to the setting data.

Examples

- The spindle is positioned to 270 degrees with M19 S270 L_F. The angle is entered in the setting data.
- M19 L_F is used to position the spindle to the value and entered in the setting data.

403*	Programmable spindle speed limitation		403*
Default value	Lower input value	Upper input limit	Units
100	0	SW 1 16 000 SW 2 99 999	rev/min or 0.1 rev/min

The maximum spindle speed is limited to this value. The setting data can be modified in the program using the command G26.

Units

The unit of the entered values is defined in bit 3 of MD 520*:

Bit 3 = 0: Unit rev/min
Bit 3 = 1: Unit 0.1 rev/min

Note

The maximum spindle speed value is determined by the minimum of the following values:

- MD 403* to 410* "Maximum speed" per gear ratio
- MD 451* "Maximum chuck speed"
- SD 401* "Programmable spindle speed limitation with G96"; programmed with G92
- SD 403* "Programmable spindle speed limitation"; programmed with G26

© Siemens AG 1990 All Rights Reserved

Spindle-specific values (max. 2 spindles)

SD No.	Designation	Default value	Maximum input value	Input unit
400*				
401*	Programmable spindle speed limitation	0	SW 1 16000 SW 2 99999	rev/min 0.1 rev/min
402*	Oriented spindle stop	0	SW 1 3599 SW 2 35999	0.1 degrees 0.01 degrees
403*	Spindle speed limitation	100	SW 1 16000 SW 2 99999	rev/min 0.1 rev/min

Setting data bits

General bits

SD No.	Bit No.							
	7	6	5	4	3	2	1	0
5000	Overtravel compensation					Turning cycles	Drilling and milling patterns	Drilling cycles
5001								Display workpiece-related actual value system

SD 5000 bits 0, 1, 2 = 1
SD 5000 bit 7 = 0: No calculation of overtravel compensation
= 1: Overtravel compensation functions

© Siemens AG 1990 All Rights Reserved

Axial bits

SD No.	Bit No.							
	7	6	5	4	3	2	1	0
560*						Scale factor active on machine	Rapid override not active	Feedrate override not active

The interface setting data need not be described, as the interfaces SD 5010 ... 5309 can be very easily set via operator prompting in the data area, DATA IN/OUT softkey (see Operator's Guide, Section 3.7) .

8.10 Cycles machine data

The cycles machine data are active only when you use the measuring cycles from Version 20. For a detailed description of the cycles machine data please refer to the

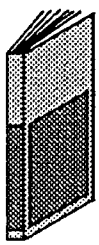

Start-up Guide
Measuring cycles, Versions 20 and 30

(Available from: LZW-Lager, Fürth Bislohe
Order No.: See SINUMERIK Documentation List)

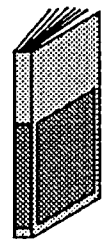

© Siemens AG 1990 All Rights Reserved

9 PLC Machine Data (PLC MD)

9.1 General remarks

9.1.1 Entering PLC MD

The PLC machine data (PLC MD) match the PLC system program to the machine tool and to the PLC user program.

The PLC MD are transferred from the machine data area to the data blocks on a PLC cold restart, where they are available to the PLC user program. PLC MD may not be entered directly into the data blocks.

The PLC MD that act upon the PLC system program do not go into force until a cold restart has been executed.

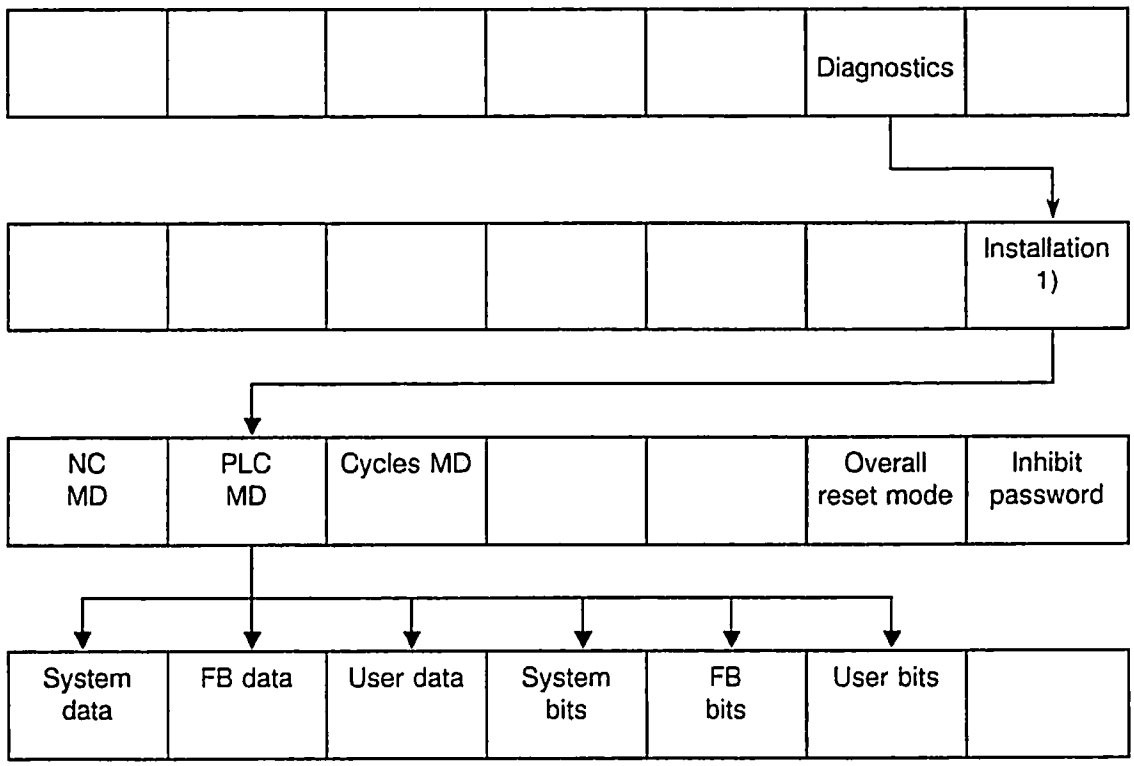

PLC MD cannot be modified until a password has been entered.

1) Selection of menu item "Installation" can be prevented via the key switch when bit 5 in NC MD 5006 is "1".

Note

The description of the function which a bit serves always refers to **set** bit.
The functional description (name) must be negated when the bit is **not** set. MDs for which there are no descriptions are set to zero when the standard MDs are loaded or when the control is installed, or they are initialized in accordance with the control configuration.

© Siemens AG 1990 All Rights Reserved 6ZB5 410-0EN02

9.1.2 Breakdown of the PLC MD

PLC MD	DB	Description	Softkey	Section
0 to 839	DB60	MD for operating system	System data	9.2
2000 to 2849	DB61	MD for function blocks	FB data	9.3
4000 to 4349	DB62	MD for user	User data	9.4
6000 to 6599	DB63	MD bits for operating system	System bits	9.5
7000 to 7799	DB64	MD bits for function blocks	FB bits	9.6
8000 to 8199	DB65	MD bits for user	User bits	9.7

Sample PLC MD

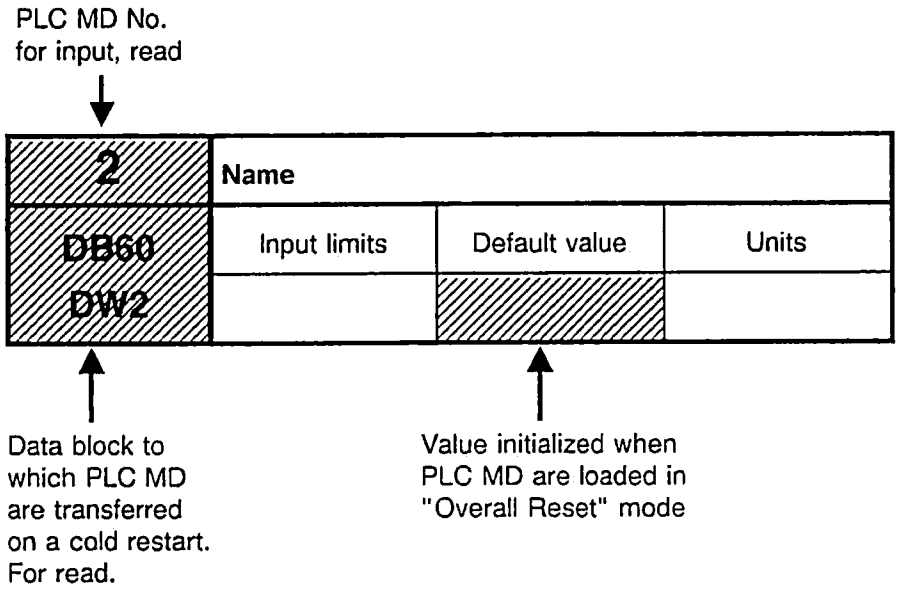

© Siemens AG 1990 All Rights Reserved 6ZB5 410-0EN02

9.2 PLC MD for the operating system (system data)

2	Time base for calling OB 5		
DB60 DW2	Input limits	Default value	Units
	+ 1 to 3	1	2.5 ms

3	Time base for calling OB 6		
DB60 DW3	Input limits	Default value	Units
	+ 1 to 9	1	10 ms

4	Time base for calling OB 7		
DB60 DW4	Input limits	Default value	Units
	+ 1 to 255	1	100 ms

Organization blocks OB 5, OB 6 and OB 7 can be used for time-controlled program execution.

The block-specific time base can be varied by a specifiable factor. This factor is block-dependent:

Blocks	Normal time base	Factor
OB 5	2.5 ms	1 to 3
OB 6	10 ms	1 to 9
OB 7	100 ms	1 to 255

A value of zero may not be specified as factor.

When using OB 5, PLC MD 6051.0 must be 0 to enable OB 5 to be invoked. Also see PLC MD 6050 (block enable for processing) and PLC MD6048 (processing delay).

© Siemens AG 1990 All Rights Reserved 6ZB5 410-0EN02

5	Last STEP 5 timer		
DB60 DW5	Input limits	Default value	Units
	- 1 to +255	64	-

The processing of timers causes a certain amount of work for the PLC operating system. Should a user program require e.g. only timers 1 to 20, entry of the number 20 tells the operating system that it should process only these timers. This saves time, and can even reduce the PLC cycle time.

An entry of "-1" disables **all** timers.

The extension to 255 is only possible with option N05; otherwise 127 timers are available.

8	Last active channel		
DB60 DW8	Input limits	Default value	Units
	1 to 4	1	-

9	Last active spindle		
DB60 DW9	Input limits	Default value	Units
	1 to 4	1	-

10	Last active axis		
DB60 DW10	Input limits	Default value	Units
	1 to 12	2 for T 3 for M	-

These entries inform the PLC operating system of the numbers of the last channel, spindle and axis.

Also see PLC MD 6000, 6012 and 6016

Example:

PLC MD 8 = 4, PLC MD 6000 = 0000 1011
Informs the PLC operating system that channels 1, 2 and 4 can be processed.
The PLC operating system processes DB10, DB11 and DB13 and transfers them to the NC-PLC interface.

© Siemens AG 1990 All Rights Reserved 6ZB5 410-0EN02

11	Last byte to reset in input image		
DB60 DW11	Input limits	Default value	Units
	64 to 127	127	-

12	Last byte to reset in output image		
DB60 DW12	Input limits	Default value	Units
	64 to 127	127	-

Can be used to specify the last input byte/output byte to be reset in the input image/output image on a cold or warm restart. This means that the bytes not used by the process peripherals can be utilized as additional flag bytes.

Example: Value in PLC MD 11 = 71 when 1st machine control panel in PLC MD 128 is set to start address 64.

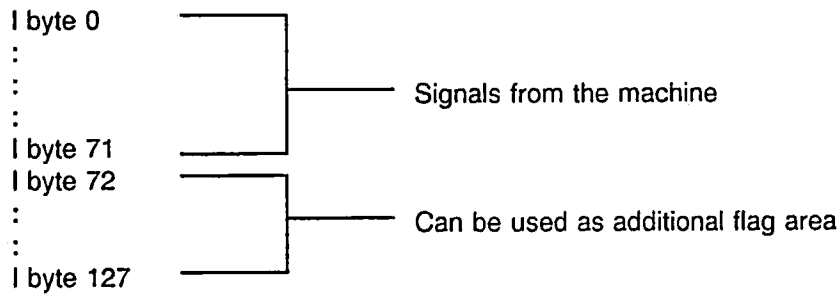

Max. 128 bytes on 135 WB

13[1)]	No. of expansion units in EU-IM 1		
14[1)]	No. of expansion units in EU-IM 2		
DB60 DW13,14	Input limits	Default value	Units
	0 - 4	0	-

It is possible to chain up to 4 expansion units (EUs). The EU numbers must be set in ascending order (0 to 3) over the rotary switch.

1) *Valid for Software Version 1 only.*

© Siemens AG 1990 All Rights Reserved 6ZB5 410-0EN02

17	No. of wait cycles for in-use user interfaces		
DB60	Input limits	Default value	Units
DW17	10	1	-

The waiting time is specified as the number of PLC cycles that may elapse before the user interface (UI) is released, and applies for all user interfaces on a PLC. When the waiting time has expired, a negative acknowledgement is sent in response to a message intended for the user interface.

Default value : 1 , i.e. the user interface must be free again after one PLC cycle
Max. input value : 10, i.e. the user interface must be free again after ten PLC cycles

See also Computer Link.

18	No. of UI available during synchronization		
DB60	Input limits	Default value	Units
DW18	0 - 31	0	-

A message intended for the host computer can be output only over this user interface during synchronization. See Computer Link.

19	No. of fct. numbers for UI core kernel sequence initiation		
DB60	Input limits	Default value	Units
DW19	0 - 10	3	-

Number of function numbers for a UI kernel core sequence initiation.

Input values:
0 = UI kernel core sequence initiation not allowed in this PLC
1...10 (max.) = UI kernel core sequence initiation allowed. The input value specifies the number of function numbers, beginning with MD DB60, DW20, for a UI kernel core sequence initiation.
3 = Default value

See Computer Link.

© Siemens AG 1990 All Rights Reserved 6ZB5 410-0EN02

20 - 29	Function no. for UI kernel core sequence initiation		
DB60	Input limits	Default value	Units
DW20 - 29	0 - 255	see table	-

Default value	
MD	Value
20	25
21	26
22	30
23 . . . 29	0 . . . 0

See Computer Link

30[1)]	No. of EU IM 1 interrupt byte		
31[1)]	No. of EU IM 2 interrupt byte		
DB60	Input limits	Default value	Units
DW30, 31	- 1 to 127	- 1	-

These specifications inform the PLC operating system of the number of the interrupt byte to be processed on the interface module.

- 1 must be entered if no byte is to be processed. If a high-speed input is to be processed, it must be interfaced over the 6FX 1132-1BB01 module's X121 connector. There may be as many as eight inputs. The relevant input byte is specified in this MD.

The individual bits can be enabled over PLC MD 6052, and the positive or negative edge evaluated over PLC MD 6055. A high-speed input is possible only when bit 0 of PLC MD 6051 is set to "0". OB2 is invoked when bit 2 of PLC MD 6050 is "0".

---

1) Valid for Software Version 1 only

© Siemens AG 1990 All Rights Reserved 6ZB5 410-0EN02

33	No. of user interfaces for the command channel		
DB60 DW33	Input limits	Default value	Units
	0 - 8	0	-

Specifies the number of user interfaces in DB41. The function is enabled over PLC MD 6026, bit 1. The value 8 in MD 33 means that the user may enter a maximum of 8 job requests in DB 41.
The value specified in the MD should be only as large as necessary, as the PLC OS scans the job requests every 20 ms (PLC runtime program). The following functions can be initiated over the command channel:

- S external
- Coupled motion of axes (if option B85 programmed)
- Transmit (if option B65 programmed)
- Division increment (if option F74 programmed)
- Position specification (if option F73 programmed).

34 to 123	Start addresses of DMP submodules, DMP IM, lines		
DB60 DW34 to 123	Input limits	Default value	Units
	SW 2 - 1 to 254 SW1 - 1 to 158	see Table	-

DMP = Distributed machine peripherals (byte number).

MD 34 to 123 define the start addresses of the input and outputs for each DMP submodule interfaced. At the same time, the PLC and the DMP interface submodule check, service and monitor the submodules.

- 1 must be entered if no DMP submodule is interfaced. PLC MD 34 defaults to 1, thus interfacing the signals from the machine control panel, beginning with input/output byte 64, to the first DMP submodule.

The DMP interface submodule (6FX1144-2BA00) has two MPC interfaces, and thus four lines. As many as 15 DMP submodules can be interfaced to each MPC.

Up to three expansion units (EUs) can be interfaced to each line in place of DMP submodules. The number of EUs interfaced reduces the number of DMP submodules accordingly. The EU number must be set on the rotary switch.

The MD (start addresses) must be initialized to values other than the default (which is - 1) for EUs. The DMP interface module interprets the MD relating to an EU only as "availability declaration"; it checks the EU configuration itself and forwards the information obtained to the PLC. As is the case for submodules, only those EUs which have been "declared" are checked, serviced and monitored.

Caution:

When the 6FX1132-0BA module (EU interface module) is inserted, output bytes 126 and 127 are reserved internally. When a 6FX1132-0BA and/or 6FX.... .... has/have been inserted, it/they has/have the higher priority (see Section 7).

© Siemens AG 1990 All Rights Reserved 6ZB5 410-0EN02

PLC MD, DB60 DW	DMP IM	MPC	DMP sub-module	PLC MD default value	DMP rotary switch position
34	1	1	1	- 1	E
35	1	1	2	- 1	D
36	1	1	3	- 1	C
37	1	1	4	- 1	B
38	1	1	5	- 1	A
39	1	1	6	- 1	9
40	1	1	7	- 1	8
41	1	1	8	- 1	7
42	1	1	9	- 1	6
43	1	1	10	- 1	5
44	1	1	11	- 1	4
45	1	1	12	- 1	3
46	1	1	13	- 1	2
47	1	1	14	- 1	1
48	1	1	15	- 1	0
49	1	2	1	- 1	E
50	1	2	2	- 1	D
51	1	2	3	- 1	C
52	1	2	4	- 1	B
53	1	2	5	- 1	A
54	1	2	6	- 1	9
55	1	2	7	- 1	8
56	1	2	8	- 1	7
57	1	2	9	- 1	6
58	1	2	10	- 1	5
59	1	2	11	- 1	4
60	1	2	12	- 1	3
61	1	2	13	- 1	2
62	1	2	14	- 1	1
63	1	2	15	- 1	0
64	2	1	1	- 1	E
65	2	1	2	- 1	D
66	2	1	3	- 1	C
67	2	1	4	- 1	B
68	2	1	5	- 1	A
69	2	1	6	- 1	9
70	2	1	7	- 1	8
71	2	1	8	- 1	7
72	2	1	9	- 1	6
73	2	1	10	- 1	5
74	2	1	11	- 1	4
75	2	1	12	- 1	3
76	2	1	13	- 1	2
77	2	1	14	- 1	1
78	2	1	15	- 1	0

© Siemens AG 1990 All Rights Reserved 6ZB5 410-0EN02

PLC MD, DB60 DW	DMP IM	MPC	DMP sub-module	PLC MD default value	DMP rotary switch position
79	2	2	1	- 1	E
80	2	2	2	- 1	D
81	2	2	3	- 1	C
82	2	2	4	- 1	B
83	2	2	5	- 1	A
84	2	2	6	- 1	9
85	2	2	7	- 1	8
86	2	2	8	- 1	7
87	2	2	9	- 1	6
88	2	2	10	- 1	5
89	2	2	11	- 1	4
90	2	2	12	- 1	3
91	2	2	13	- 1	2
92	2	2	14	- 1	1
93	2	2	15	- 1	0
94	3	1	1	- 1	E
95	3	1	2	- 1	D
96	3	1	3	- 1	C
97	3	1	4	- 1	B
98	3	1	5	- 1	A
99	3	1	6	- 1	9
100	3	1	7	- 1	8
101	3	1	8	- 1	7
102	3	1	9	- 1	6
103	3	1	10	- 1	5
104	3	1	11	- 1	4
105	3	1	12	- 1	3
106	3	1	13	- 1	2
107	3	1	14	- 1	1
108	3	1	15	- 1	0
109	3	2	1	- 1	E
110	3	2	2	- 1	D
111	3	2	3	- 1	C
112	3	2	4	- 1	B
113	3	2	5	- 1	A
114	3	2	6	- 1	9
115	3	2	7	- 1	8
116	3	2	8	- 1	7
117	3	2	9	- 1	6
118	3	2	10	- 1	5
119	3	2	11	- 1	4
120	3	2	12	- 1	3
121	3	2	13	- 1	2
122	3	2	14	- 1	1
123	3	2	15	- 1	0

© Siemens AG 1990 All Rights Reserved 6ZB5 410-0EN02

124	Byte no. of 1st alarm byte		
125	Byte no. of 2nd alarm byte		
126	Byte no. of 3rd alarm byte		
127	Byte no.of 4th alarm byte		
DB60 DW124 to 127	Input limits	Default value	Units
	- 1 to 127	- 1	-

This PLC MD can be used to define as many as 4 input bytes as alarm bytes. The PLC software scans these bytes for changes every 10 ms. - 1 must be entered for input bytes that are not to serve as alarm bytes.

The PLC outputs an error message and goes to STOP if illegal values are detected on a cold restart.

If enabled over PLC MD 6050, bit 3 (bit 3 = 0), OB 3 is invoked when an alarm is generated.

128	Start address for 1st machine control panel		
DB60 DW128	Input limits	Default value	Units
	0 - 120	64	-

129	Start address for 2nd machine control panel		
DB60 DW129	Input limits	Default value	Units
	0 - 120	72	-

These PLC MD specify the start address (byte) for the machine control panels.

Eight bytes are required for each control panel.The inputs and outputs for each control panel have the same address address numbers.

© Siemens AG 1990 All Rights Reserved 6ZB5 410-0EN02

Machine data words for PLC operating system (DB 60) (as from SW 2)

DW No. PLC MD No.	High byte (DL)	Low byte (DR)
DW 130 MD130	No. of interrupt byte of 1st DMP interface module, 1st line Default setting = –1	–1 ... 158 SW 1 –1 ... 254 SW 2
DW 131 MD131	No. of interrupt byte of 1st DMP interface module, 2nd line Default setting = –1	–1 ... 158 SW 1 –1 ... 254 SW 2
DW 132 MD132	No. of interrupt byte of 2nd DMP interface module, 1st line Default setting = –1	–1 ... 158 SW 1 –1 ... 254 SW 2
DW 133 MD133	No. of interrupt byte of 2nd DMP interface module, 2nd line Default setting = –1	–1 ... 158 SW 1 –1 ... 254 SW 2
DW 134 MD134	No. of interrupt byte of 3rd DMP interface module, 1st line Default setting = –1	–1 ... 158 SW 1 –1 ... 254 SW 2
DW 135 MD135	No. of interrupt byte of 3rd DMP interface module, 2nd line Default setting = –1	–1 ... 158 SW 1 –1 ... 254 SW 2

Address m = 0

Note:

- Only one interrupt byte is possible per DMP interface module, i.e. only one of the two machine data of an interface module may contain a value not equal to -1.
- A maximum of 3 interrupt bytes are possible.
- The interrupt byte in the DMP line is always the **first** input byte of a DMP submodule. If another byte is declared as interrupt byte it is not recognized and therefore not treated as an interrupt byte. An error message is not issued in this case.
- Interrupt signals can be activated via DMP submodules.
- For the DMP interrupt-generating function, the PLC must be operated in special mode (interruption at command limits).

© Siemens AG 1990 All Rights Reserved

9.3 PLC MD for function blocks (FB data)

2000 to 2077	PLC MD values for tool management package		
DB61 DW0 to 78	Input limits	Default value	Units
		0	-

For values and their meanings, refer to the Tool Management description.

2078 to 2089	PLC MD values for computer link package		
DB61 DW79 to 89	Input limits	Default value	Units
		0	-

For values and their meanings, see the Computer Link description.

2090	PLC MD values for load package		
DB61 DW90	Input limits	Default value	Units
		0	-

For values and their meanings, see the Package 0 description.

© Siemens AG 1990 All Rights Reserved 6ZB5 410-0EN02

9.4 PLC MD for the user

4000 to 4049	PLC MD values for user		
DB62 DW0 to 49	Input limits	Default value	Units
		0	-

A special area comprising 50 PLC MD words is available to the user to do with as he sees fit. This area can be used, for example, to match the user's machine program to the machine configuration (also see PLC MD 8000 to 8049).

© Siemens AG 1990 All Rights Reserved 6ZB5 410-0EN02

9.5 PLC MD for the operating system (system bits)

PLC MD DB63 DW No.	Bit No. 7	6	5	4	3	2	1	0
6000 DL 0					Signals from/to NC channel 4	3	2	1

Default value: 0000 1111

This MD is used to enable the interchange of channel signals between NC and PLC. Because the 840 system has a one-channel basic configuration, bit 0 must be "1". When there are several channels, the corresponding bits must be set in this MD.

The highest channel number is specified for the PLC software in PLC MD 8. Options D32, D33 and D34 enable the use of as many as 4 channels.

PLC MD DB63 DW No.	Bit No. 7	6	5	4	3	2	1	0
6009 DR 4					M decoding with extended address for NC channel 4	3	2	1

Default value: All bits default to 0

M DECODING WITH EXTENDED ADDRESS FOR NC CHANNEL (1 TO 4)

Bit = 0 No M decoding with extended address
Bit = 1 M decoding with extended address

Note:

The relevant data block (DB 80 - DB 83) must be loaded to enable M decoding with extended address. If the bit is set but the DB has not been loaded, the PLC goes into the STOP loop (for a list of errors, see the Installation Lists).

© Siemens AG 1990 All Rights Reserved 6ZB5 410-0EN02

PLC MD DB63 DW No.	Bit No. 7	6	5	4	3	2	1	0
6012					Signals from/to spindle			
DL 6					4	3	2	1

Default value: 0000 0001

This MD enables the interchange of spindle signals between NC and PLC. As the basic configuration of the 840T includes only one spindle, bit 0 must be "1".

If more than one spindle is available, the corresponding bit must set in this MD. The highest spindle number is entered in PLC MD 9. Options E41, F05 and F06 enable the use of as many as 4 spindles.

PLC MD DB63 DW No.	Bit No. 7	6	5	4	3	2	1	0
6016	Signals from / to axis							
DL 8	8	7	6	5	4	3	2	1
6017					Signals from/to axis			
DR 8					12	11	10	9

Default value: MD 6016 0000 0111
MD 6017 0000 0000

As the basic configuration of the 840T includes two axes, bits 0 and 1 in MD 6016 must be set to "1".

If there are more than two axes, the corresponding bits must be set in this MD.
The highest axis number is specified in PLC MD 10.

Fictitious axes for transformation (option B65) must also be declared in the PLC MDs.
Options A01 to A06 provide for more than two real axes.

© Siemens AG 1990 All Rights Reserved 6ZB5 410-0EN02

PLC MD DB63 DW No.	Bit No. 7	6	5	4	3	2	1	0
6026 DL 13	Serial interface		Deselect autom. NC START INHIBIT with MDA		Save flag (as from SW 2)	Access with @ commands inhibited	Command channel	

Default value: 1000 000

Bit 7 When bit 7 is set, data can be read in and out over the (V.24) RS232C interface with DB 37. The interface number is allocated to the PLC in NC MD 200.

Bit 3 = 0: Save flags 224 - 255 (default setting)

Bit 3 = 1: Save flags 200 - 255

Bit 5 = 0 : On MDA mode, NC start is only issued to the selected channel. NC start is **not** issued to those channels reporting "NC start inhibit" (DBs 10-13, D 16-15).

Bit 5 = 1: NC start is issued to all channels (even if "NC start inhibit" is active). It is up to the user to make sure that NC start is not issued to the NC (DB 10-13, D 20).

Note:

The MD is **not** active when using the "Overstore" function. With "Overstore", NC start is **always** prevented from becoming active in a non-selected channel.

Bit 2 Access to PLC data over @ commands is disabled.

Bit 1 The command channel function is enabled. The number of user interfaces is specified in PLC MD 33. See PLC MD 33.

PLC MD DB63 DW No.	Bit No. 7	6	5	4	3	2	1	0
6029 DR 14								T/H word routing

Default value: 0

Bit 0 **Bit = 0** T and H words are output to the programmed channel DB only. Also see the Interface Description.

Bit = 1 T/H words can be routed to different channel DBs over the extended T/H address.

© Siemens AG 1990 All Rights Reserved 6ZB5 410-0EN02

PLC MD DB63 DW No.	Bit No. 7	6	5	4	3	2	1	0
6030 DL 15					Error/operational messages on inactive channels 4	3	2	1

Default value: All bits default to 0

0 - Signal: Corresponding **inactive** channel DB is not used to activate error/operational messages

1 - Signal: The inactive channel DB is used to activate error/operational messages.

Example:

0	0	0	0	0	0	1	1

PLC MD 6000

Only the error bits in the active channel DBs (DB10, DB11) for channels 1 and 2 are evaluated.

0	0	0	0	1	1	0	0

PLC MD 6030

The error bits in the inactive channel DBs (DB12, DB13) for channels 3 and 4 are also evaluated.

Note:

If an error bit is set in an inactive channel DB that is used for the extended display of error and operational messages, then the corresponding errors are **not** included in the message group displays.

The simultaneous allocation of PLC channels (MD 6000) and activation of the display of error and operational messages for **unused** channels (MD 6030) is not permitted, as it would result in corruption and falsification of the displays. Also refer to Section 7.

Example: MD 6000.0 = 1 and
MD 6030.0 = 1

© Siemens AG 1990 All Rights Reserved 6ZB5 410-0EN02

PLC MD DB63 DW No.	Bit No. 7	6	5	4	3	2	1	0
6032	Error messages: Signals to NC channel							
DL 16	DR 9	DL 9	DR 8	DL 8	DR 7	DL 7	DR 6	DL 6
6033	Error messages: Signals to NC channel							
DR 16					DR 11	DL 11	DR 10	DL 10

Default value: All bits default to 0

Bit = 0 The system software does not evaluate the bits in the corresponding interface byte for error messages.

Bit = 1 The system software evaluates the bits in the corresponding interface byte for error messages.

Note:

The bit applies to all channels. If the **identical** bit is also set for operational messages (PLC MD 6040/6041), the PLC goes into the stop loop in the startup routine.

Sample application:

Error message evaluation when a DR8 bit is "1": PLC MD 6032.5 = 1
Bit 9.5 in channel 2 (DB 11) results in issuance of error message number 6145 (see Section 7).

PLC MD DB63 DW No.	Bit No. 7	6	5	4	3	2	1	0
6034	Error messages: Signals to spindle							
DL 17							DR k+3	DL k+3

Default value: All bits default to 0
K = 0, 4, 8, 12 (1st to 4th spindle)

Bit = 0 The system software does not evaluate the bits in the corresponding interface byte for error messages.

Bit = 1 The system software evaluates the bits in the corresponding interface byte for error messages.

Note:

1) The bit applies to **all** spindles.
2) If the **identical** bit is also set for operational messages (PLC MD 6042), the PLC goes into the stop loop in the startup routine.

Sample application:

DB 31 D 7.9 "1" signal → error message 8021;
PLC MD 6034.0 = 1 (See Section 7)

© Siemens AG 1990 All Rights Reserved 6ZB5 410-0EN02

PLC MD DB63 DW No.	Bit No. 7	6	5	4	3	2	1	0
6035	Error messages: Signals to axis							
DR 17							DR k+3	DL k+3

Default value: All bits default to 0
K = 0, 4, 8, 12, ... 44 (1st to 12th axis)

Bit = 0 The system software does not evaluate the bits in the corresponding interface byte for error messages.
Bit = 1 The system software evaluates the bits in the corresponding interface byte for error messages.

Note:

1) The bit applies to **all** axes.
2) If the identical bit is also set for operational messages (PLC MD 6043), the PLC goes into the Stop loop.

Sample application:

DB 32 D 3.3 "1" signal → error message 8211;
PLC MD 6035.1 = 1
See Section 7.

© Siemens AG 1990 All Rights Reserved 6ZB5 410-0EN02

PLC MD DB63 DW No.	Bit No. 7	6	5	4	3	2	1	0
6036	Error messages: DB 58 messages							
DL 18	DR 4	DL 4	DR 3	DL 3	DR 2	DL 2	DR 1	DL 1
6037	Error messages: DB 58 messages							
DR 18	DR 8	DL 8	DR 7	DL 7	DR 6	DL 6	DR 5	DL 5
6038	Error messages: DB 58 messages							
DL 19	DR 12	DL 12	DR 11	DL 11	DR 10	DL 10	DR 9	DL 9
6039	Error messages: DB 58 messages							
DR 19		DL 16	DR 15	DL 15	DR 14	DL 14	DR 13	DL 13

Default value: All bits default to 0

Bit = 0 The system software does not evaluate the bits in the corresponding interface byte for error messages.

Bit = 1 The system software evaluates the bits in the corresponding interface byte for error messages.

Note:

If the identical bit is also set for operational messages (PLC MD 6044-6047), the PLC goes into the Stop loop.

Sample application:

DB 58 D 3.10 "1" signal → error message 9034;
PLC MD 6039.4 = 1

© Siemens AG 1990 All Rights Reserved 6ZB5 410-0EN02

PLC MD DB63 DW No.	Bit No. 7	6	5	4	3	2	1	0
6040	Operational messages: Signals to NC channel							
DL 20	DR 9	DL 9	DR 8	DL 8	DR7	DL 7	DR 6	DL 6
6041	Operational messages: Signals to NC channel							
DR 20					DR 11	DL 11	DR 10	DL 10

Default value: All bits default to 0

Bit = 0 The system software does not evaluate the bits in the corresponding interface byte for operational messages.

Bit = 1 The system software evaluates the bits in the corresponding interface byte for operational messages.

Note:

1) The bit applies to **all** NC channels.
2) If the same bit is also set for error messages (PLC MD 6032, 6033), the PLC goes into the Stop loop.

Sample application:

DB 10 D 6.8 "1" signal → operational message 6000;
PLC MD 6040.0 = 1
See Section 7.

© Siemens AG 1990 All Rights Reserved 6ZB5 410-0EN02

PLC MD DB63 DW No.	Bit No. 7	6	5	4	3	2	1	0
6042	Operational messages: Signals to spindle							
DL 21							DR k+3	DL k+3

Default value: All bits default to 0
K = 0, 4, 8, 12 (1st to 4th spindle)

Bit = 0 The system software does not evaluate the bits in the corresponding interface byte for operational messages.
Bit = 1 The system software evaluates the bits in the corresponding interface byte for operational messages.

Note:

1) The bit applies to **all** spindles.
2) If the same bit is also set for error messages (PLC MD 6034), the PLC goes into the Stop loop.

Sample application:

DB 31 D 7.1 "1" signal → operational message 8029;
PLC MD 6042.1 = 1
See Section 7.

PLC MD DB63 DW No.	Bit No. 7	6	5	4	3	2	1	0
6043	Operational messages: Signals to axis							
DR 21							DR k+3	DL k+3

Default value: All bits default to 0
K = 0, 4, 8, 12, ... 44 (1st to 12th axis)

Bit = 0 The system software does not evaluate the bits in the corresponding interface byte for operational messages.
Bit = 1 The system software evaluates the bits in the corresponding interface byte for operational messages.

Note:

1) The bit applies to **all** axes.
2) If the same bit is also set for error messages (PLC MD 6035), the PLC goes into the Stop loop.

Sample application:

DB 31 D 7.1 "1" signal → operational message 8029;
PLC MD 6042.1 = 1
See Section 7.

© Siemens AG 1990 All Rights Reserved 6ZB5 410-0EN02

PLC MD DB63 DW No.	Bit No. 7	6	5	4	3	2	1	0
6044	Operational messages: DB 58 messages							
DL 22	DR 4	DL 4	DR 3	DL 3	DR 2	DL 2	DR 1	DL 1
6045	Operational messages: DB 58 messages							
DR 22	DR 8	DL 8	DR 7	DL 7	DR 6	DL 6	DR 5	DL 5
6046	Operational messages: DB 58 messages							
DL 23	DR 12	DL 12	DR 11	DL 11	DR 10	DL 10	DR 9	DL 9
6047	Operational messages: DB 58 messages							
DR 23		DL 16	DR 15	DL 15	DR 14	DL 14	DR 13	DL 13

Default value: All bits default to 0

Bit = 0 The system software does not evaluate the bits in the corresponding interface byte for operational messages.

Bit = 1 The system software evaluates the bits in the corresponding interface byte for operational messages.

Note:

If the same bit is also set for error messages (PLC MD 6036 to 6039), the PLC goes into the Stop loop.

Sample application:

DB 58 D 5.1 "1" signal → operational message 9073;
PLC MD 6045.1 = 1

© Siemens AG 1990 All Rights Reserved 6ZB5 410-0EN02

PLC MD DB63 DW No.	Bit No. 7	6	5	4	3	2	1	0
6048 DL 24	PLC Stop during processing delay: OB 7	OB 6	OB 5	OB 4	OB 3	OB 2		

Default value: 1111 1100

Bit = 0 A delay in the relevant OB does not force the programmable controller to STOP.
Bit = 1 A delay in the relevant OB forces the programmable controller to STOP.

Note:

If the programmable controller is not to go to STOP when there is a processing delay in an OB, a bit is set in flag byte 6 when such a delay occurs. The user can scan this bit and take any appropriate measures.

PLC MD DB63 DW No.	Bit No. 7	6	5	4	3	2	1	0
6049 DR 24							Cold restart on RESET (as from SW2)	Test bit

Default value: 0

Bit 0 For installation and for testing the STEP 5 program.
Bit = 0 No precise cause for a time-out during bus access can be displayed. In standard operations, this bit must be 0.
Bit = 1 The exact cause of a time-out (QVZ) is displayed as one item of precision error detection data (135 WB PLC). Bus access or the STEP 5 program is **slower.**

The bus interface executes a write access to the link or local bus while the processor receives an acknowledgement and continues operation (buffered access to local/link bus). Should a timeout occur during this type of write access, no deductions can be made regarding its cause by referring to the processor and coprocessor registers.

The user can switch off buffered access to link and local bus via machine data (PLC operating system MD bits 6049.0 (e.g. if he wishes to test STEP 5 programs during commissioning). This type of access operates more slowly however as the processor only receives an acknowledgement once the entire bus cycle is completed.

Machine data 6048.0 must be set in order to determine the exact cause of the timeout.

Bit 1 = 0 No IP/WF modules used (standard)
Bit 1 = 1 IP/WF modules inserted, a cold restart is enforced after every RESET.

© Siemens AG 1990 All Rights Reserved 6ZB5 410-0EN02

PLC MD DB63 DW No.	Bit No. 7	6	5	4	3	2	1	0
6050 DL 25	Disable: OB 7	OB 6	OB 5	OB 4	OB 3	OB 2		

Default value: 1111 1100

Bit = 0 The relevant OB is enabled for processing.

Bit = 1 The OB is disabled for processing and is not invoked by the system program.

PLC MD DB63 DW No.	Bit No. 7	6	5	4	3	2	1	0
6051 DR 25							PG mode	PLC mode

Default value: 0000 0001

Bit 1 **Bit = 0** The programmer displays 155U as CPU identifier
Bit = 1 The programmer displays 135 WB as CPU identifier
See Section 7

For OB 5, also see PLC MD 2
For OB 2, also see PLC MD 30, 6032 and 6055

Bit 0 **Bit = 0** Level change possible after each STEP 5 statement (special mode).
Bit = 1 Level change (e.g. OB 6 interrupts OB 1) possible at block boundaries only (same performance as 130 WB PLC in normal mode).

Note:

The bit for "PLC mode" must be 0 if OB 2 and OB 5 are to be invoked. If this bit is "1", the OBs are not processed even if they have been loaded into the programmable controller.

© Siemens AG 1990 All Rights Reserved 6ZB5 410-0EN02

PLC MD DB63 DW No.	Bit No. 7	6	5	4	3	2	1	0
6052	Enable interrupt inputs on 1st EU IM (SW 1)							
DL 26	7	6	5	4	3	2	1	0
6053	Enable interrupt inputs on 2nd EU IM (SW 1)							
DR 26	7	6	5	4	3	2	1	0

Default value: 0

An EU interface module's 8 interrupt inputs can be enabled separately.

Bit = 0 Input is disabled
Bit = 1 Input is enabled for OB 2 call

Also see PLC MD 30.

PLC MD DB63 DW No.	Bit No. 7	6	5	4	3	2	1	0
6055	Interrupt byte on 1st EU IM for edge selection							
DR 27	7	6	5	4	3	2	1	0
6056	Interrupt byte on 2nd EU IM for edge selection							
DL 28	7	6	5	4	3	2	1	0

Default value: 0

A signal change at an EU IM interrupt input triggers the interrupt that invokes OB 2 (enable via PLC MD 6052). The signal edge (i.e. positive or negative edge) that is to trigger the interrupt can be specified separately for each interrupt input.

Bit = 0 Positive edge triggers interrupt
Bit = 1 Negative edge triggers interrupt

The system program checks the machine data for the interrupt-generating I/Os for validity on cold restart. The PLC issues an error message and goes to STOP when illegal machine data are encountered. Also see PLC MD 30.

© Siemens AG 1990 All Rights Reserved 6ZB5 410-0EN02

PLC MD DB63 DW No.	Bit No. 7	6	5	4	3	2	1	0
6061 DR 30								No STOP on IFC failure

Default value: All bits default to 0

Bit 0 No Stop request when interface CPU (IFC) fails.

Bit = 0 The PLC CPU goes to Stop on IFC failure (red LED lights up). Bit 0 should be 0 when the machine control panel is connected to the IFC.
Bit = 1 No reaction from the PLC CPU to an IFC failure.

PLC MD DB63 DW No.	Bit No. 7	6	5	4	3	2	1	0
6065 DR 32	Machine control panel selection (as from SW 2)					100% keys = customer keys (as from SW 2)		Travel-key LEDs

Default value: All bits default to 0

Bit 0 Travel-key LEDs on the machine control panel

Bit = 0 The user can control the travel-key LEDs
Bit = 1 The PLC operating system controls the travel-key LEDs

Bit 2 = 1 The new machine control panel incorporates no 100% keys. These keys can be transferred to the customer keys using this bit.
The MD bit takes no effect if MD bit 6065, bit 7 = "1".

Bit 7 = 1 New machine control panel connected to the IFC
= 0 Old machine control panel connected to the IFC

© Siemens AG 1990 All Rights Reserved 6ZB5 410-0EN02

PLC MD DB63 DW No.	Bit No. 7	6	5	4	3	2	1	0
6066 DL 33			1st machine control panel configuration				MCP to CPU interface	MCP to DMP
6067 DR 33			2nd machine control panel configuration				MCP to CPU interface	MCP to DMP

MCP = Machine control panel

Default value: MD 6066 0000 0001, MD 6067 All bits default to 0

Bit 4 **Bit = 1** Machine control panel equipped with double-slide block.

Bit 1 MCP signals are routed over the CPU interface (IFC) (6FX 1123-6CA00) (default).

Bit 0 MCP signals are routed over the interface DMP (6FX 1144-2BA00) or PLC I/O module.

PLC MD	Default values
6400 - 6419	0000 0001
6420 - 6479	0000 0000
6480 - 6499	0000 0001
6500 - 6559	0000 0000

These PLC MD are internal system bits. The defaults must not be modified in any way.

© Siemens AG 1990 All Rights Reserved 6ZB5 410-0EN02

PLC performance (IA) (SW 2)

Byte No. DB 63 PLC MD	15	14	13	12	11	10	9	8
	Bit No.							
	7	6	5	4	3	2	1	0
DL 34 6068	Interrupt-triggering edge for interrupt inputs 1st DMP interface module					1st line, bits 0...7		
DR 34 6069	Interrupt-triggering edge for interrupt inputs 1st DMP interface module					2nd line, bits 0...7		
DL 35 6070	Interrupt-triggering edge for interrupt inputs 2nd DMP interface module					1st line, bits 0...7		
DR 35 6071	Interrupt-triggering edge for interrupt inputs 2nd DMP interface module					2nd line, bits 0...7		
DL 36 6072	Interrupt-triggering edge for interrupt inputs 3rd DMP interface module					1st line, bits 0...7		
DR 36 6073	Interrupt-triggering edge for interrupt inputs 3rd interface DMP interface module					2nd line, bits 0...7		
DL 37 6074	Enable interrupt inputs 1st DMP interface module					1st line, bits 0...7		
DR 37 6075	Enable interrupt inputs 1st DMP interface module					2nd line, bits 0...7		
DL 38 6076	Enable interrupt inputs 2nd DMP interface module					1st line, bits 0...7		
DR 38 6077	Enable interrupt inputs 2nd DMP interface module					2nd line, bits 0...7		
DL 39 6078	Enable interrupt inputs 3rd DMP interface module					1st line, bits 0...7		
DR 39 6079	Enable interrupt inputs 3rd DMP interface module					2nd line, bits 0...7		

© Siemens AG 1990 All Rights Reserved 6ZB5 410-0EN02

Processing of operational messages (IA) (SW 2)

Byte No. DB 63 PLC MD	Bit No. 15	14	13	12	11	10	9	8
	7	6	5	4	3	2	1	0
DL 40 6080	Error messages DB 58 MESSAGES							
	DR 20	DL 20	DR 19	DL 19	DR 18	DL 18	DR 17	DL 17
DR 40 6081	Error messages DB 58 MESSAGES							
	DR 24	DL 24	DR 23	DL 23	DR 22	DL 22	DR 21	DL 21
DL 41 6082	Error messages DB 58 MESSAGES							
	DR 28	DL 28	DR 27	DL 27	DR 26	DL 26	DR 25	DL 25
DR 41 6083	Error messages DB 58 MESSAGES							
		DL 32	DR 31	DL 31	DR 30	DL 30	DR 29	DL 29
DL 42 6084	Operational messages DB 58 MESSAGES							
	DR 20	DL 20	DR 19	DL 19	DR 18	DL 18	DR 17	DL 17
DR 42 6085	Operational messages DB 58 MESSAGES							
	DR 24	DL 24	DR 23	DL 23	DR 22	DL 22	DR 21	DL 21
DL 43 6086	Operational messages DB 58 MESSAGES							
	DR 28	DL 28	DR 27	DL 27	DR 26	DL 26	DR 25	DL 25
DR 43 6087	Operational messages DB 58 MESSAGES							
		DL 32	DR 31	DL 31	DR 30	DL 30	DR 29	DL 29
DL 44 6088	Reserved							
DR 44 6089	Reserved							
DL 45 6090	Reserved							
DR 45 6091	Reserved							
DL 46 6092	Reserved							
DR 46 6093	Reserved							
DL 47 6094	Reserved							
DR 47 6095	Reserved							

© Siemens AG 1990 All Rights Reserved 6ZB5 410-0EN02

PLC performance (IA)								
Byte No. DB 63 PLC MD	15	14	13	12	11	10	9	8
	Bit No.							
	7	6	5	4	3	2	1	0
DL 48 6096	Reserved							
DR 48 6097	Reserved							
DL 49 6098	Reserved							
DR 49 6099	Reserved							

MD No.	Bit No.							
	7	6	5	4	3	2	1	0
6400 : 6419	Internal system bits Bit 0 must be set to 1							
6480 : 6499	Internal system bits Bit 0 must be set to 1							

MD 6400 to 6574 without DB.

© Siemens AG 1990 All Rights Reserved 6ZB5 410-0EN02

9.6 PLC MD bits for function blocks (FB bits)

PLC MD DB64 DW No.	Bit No. 7	6	5	4	3	2	1	0
7044 DL 22							2	1

PLC MD DB64 DW No.	Bit No. 7	6	5	4	3	2	1	0
7000 to 7049 DW 0 - DW 24								

Default value: All bits default to 0

Refer to the Tool Management and Computer Link literature for details.

© Siemens AG 1990 All Rights Reserved 6ZB5 410-0EN02

9.7 PLC MD bits for the user (user bits)

PLC MD DB65 DW No.	Bit No. 7	6	5	4	3	2	1	0
8000 to 8049 DW 0 - DW 24								

Default value: All bits default to 0

In addition to PLC MD words, PLC MD bits are also available to the user to do with as he sees fit. The available bit area comprises 25 words (400 bits).

The PLC machine data enables the machine manufacturer to process program blocks, function blocks or sections of a program conditionally on the basis of the bits set, and to allocate machine-specific option bits. The user can then specify additional machine-specific values.

Sample application:

A user builds machines with different turrets, but wants to be able to provide a single program for all machines. The turrets differ in the number of tool locations, e.g. turret 1 has 6, turret 2 has 8 locations.

The program for each type of turret (in this case a program block) is invoked via a corresponding PLC machine data bit. In the program, the number of tool locations is specified in PLC MD words.

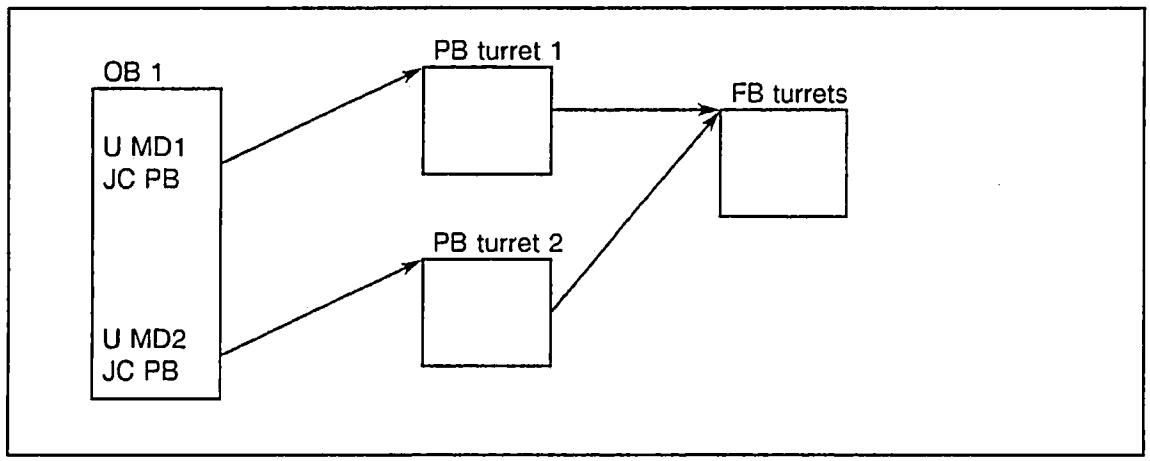

© Siemens AG 1990 All Rights Reserved 6ZB5 410-0EN02

10 Interface to the Machine

10.1 DAC measuring-circuit module (6FX1121-4B..)

10.1.1 Connector pin assignments for actual-value input

The actual values are supplied to the NC via 15-pin connectors (measuring-circuit module 6FX1 121-4BA to 6FX1 121-4BK).

1st actual-value connector → encoder 1 (X131)
2nd actual-value connector → encoder 2 (X111)
3rd actual-value connector → encoder 3 (X121)

It is possible to interface incremental rotary encoders or incremental linear encoders with EXE external pulse-shaper electronics (e.g. linear scale LS703 and EXE603).

The input signals to the measuring-circuit modules are identical for both encoders. The 6FX1 121-4B.. module is also available with integrated EXE. In this case, the signals are routed from the measuring head directly to measuring-circuit modules and are converted on the module into TTL signals.

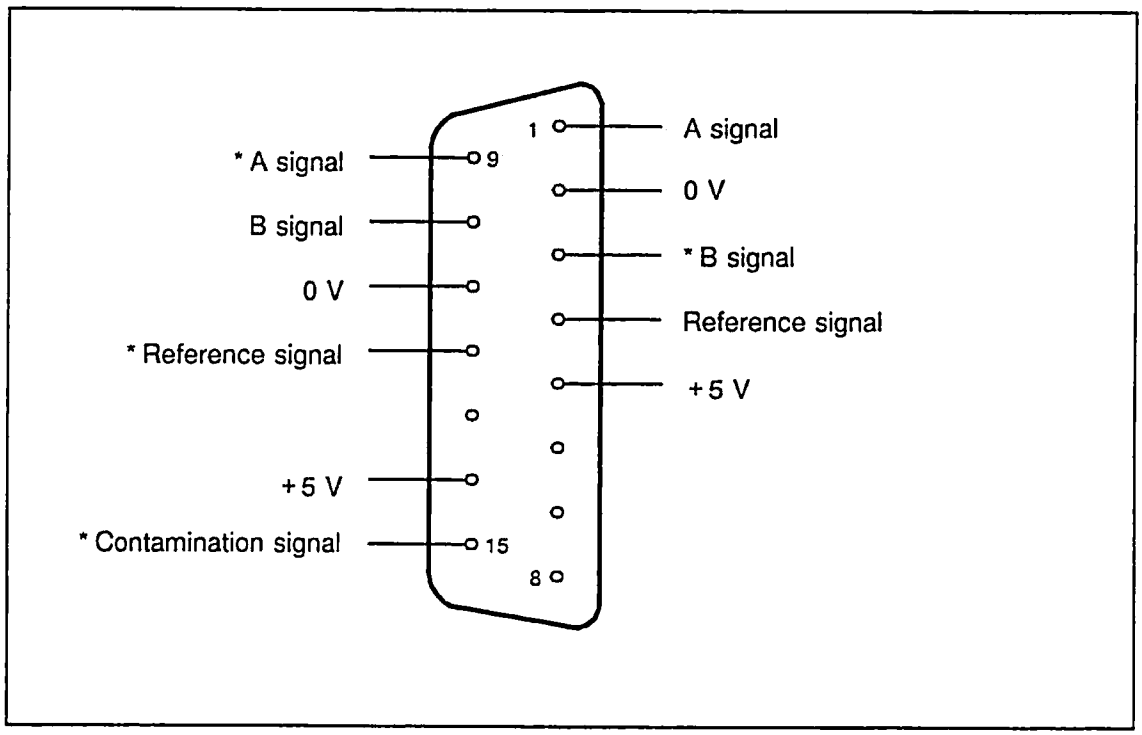

Actual-value connector pin assignments

© Siemens AG 1990 All Rights Reserved 6ZB5 410-0EN02

10.1.2 Differential input

Input signals and characteristic values for digital measuring systems with differential output.

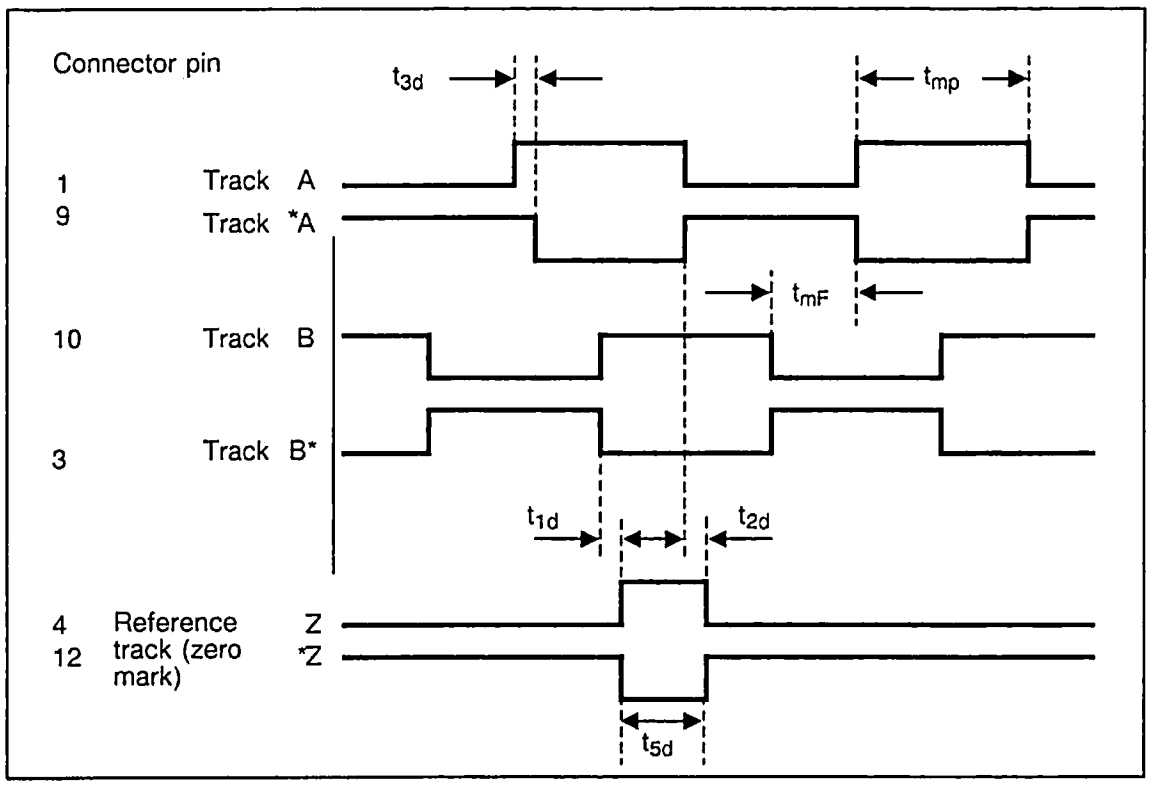

Input signals for digital measuring systems with differential output

Some important characteristic values:

- Supply voltage for encoder ..... 5 V ± 5 %
- Supply voltage basic ripple ..... ≤ 100 m V_{pp}
- Current per encoder system ..... ≤ 300 mA
- Ohmic input resistance ..... 470 ohm
- Dynamic input resistance ..... 110 ohm
- Differential input voltage
  e.g. between A and *A ..... ≥ 1 V
- Max. differential input voltage ..... 10 V
- Max. input frequency at 90°
  electrical phase displacement ..... 1 MHz (without EXE)
  between A and B track pulses ..... 300 KHz (with EXE)
- Minimum pulse width tmP ..... ≥ 400 ns
- Minimum interval between two consecutive
  edges tmF ..... ≥ 200 ns
- t1d and t2d 60 ns
- Maximum delay between two consecutive
  edges of a track t3d ..... ≤ 6 ns
- Condition for reference track (zero mark) ..... Z = high,
  high when A and B = high
- Rate of change (all signals) ..... ≥ 1 V / µs
- Minimum length of zero mark t5d ..... ≥ 200 ns

© Siemens AG 1990 All Rights Reserved 6ZB5 410-0EN02

10.1.3 Equivalent circuit diagram with differential input

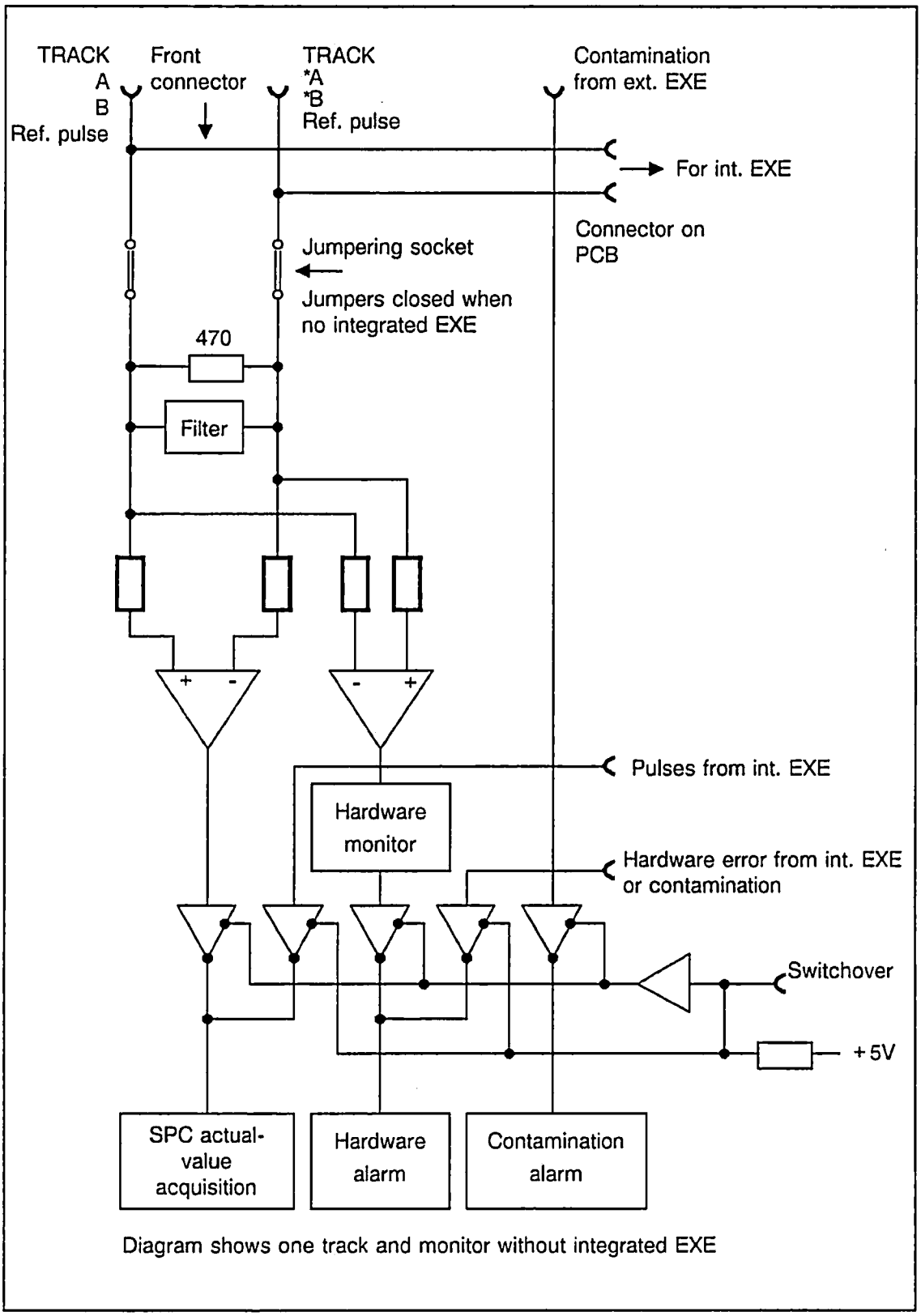

Equivalent circuit diagram with differential input

© Siemens AG 1990 All Rights Reserved 6ZB5 410-0EN02

10.1.4 Equivalent circuit diagram for actual-value input with integrated EXE

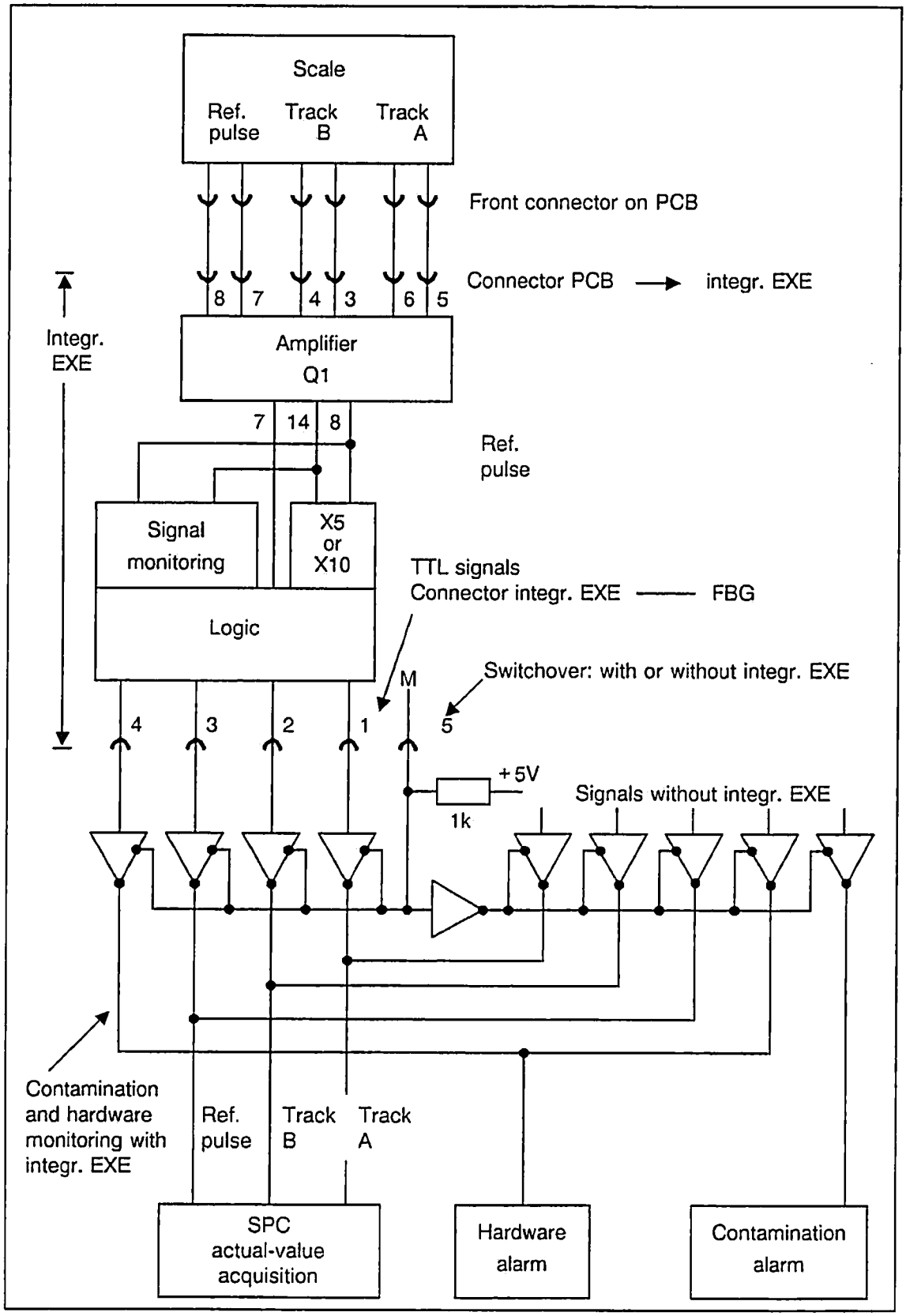

Equivalent circuit diagram for actual-value input with integrated EXE

© Siemens AG 1990 All Rights Reserved 6ZB5 410-0EN02

10.1.5 Complement for integrated EXE

The 6FX1 121-4B.. measuring-circuit module allows for a complement of up to three 5-fold EXEs or up to two 10-fold EXEs.

The following diagram shows the permissible combinations with the maximum complement:

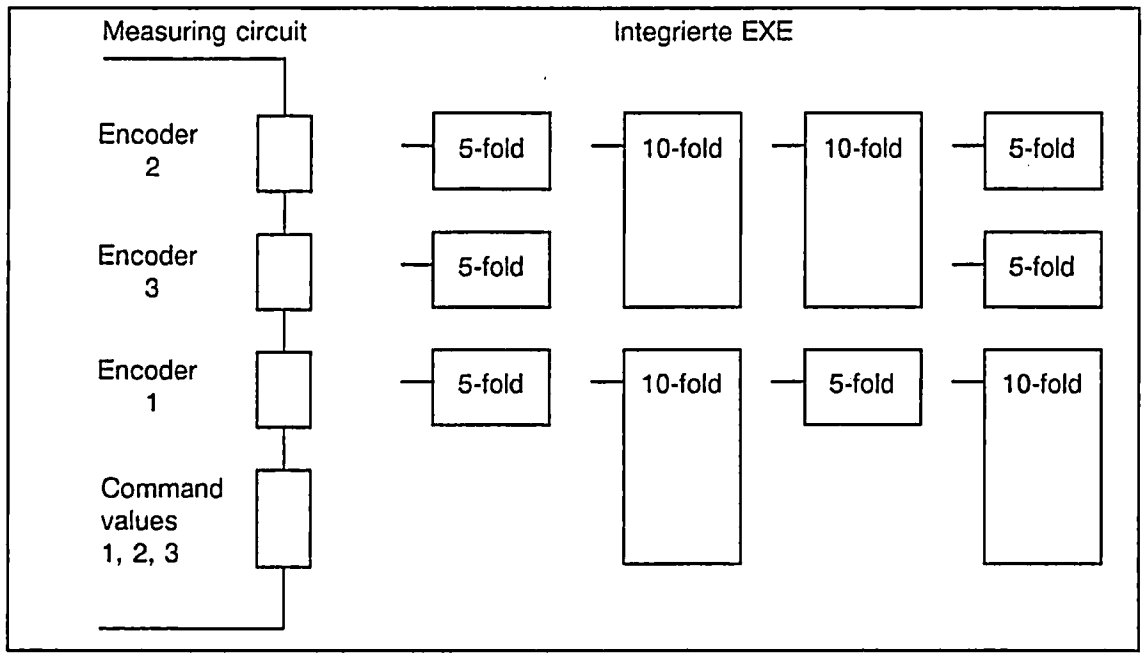

Complement variations with integrated EXEs

Width	Order No.	Order No.	Axis		
			1 X 131	2 X 111	3 X 121
20 mm	6FX1 121-4BA01	K 20			
40 mm	6FX1 121-4BB01	K 21			
20 mm	6FX1 121-4BC01	K 22			
40 mm	6FX1 121-4BD01	K 23	5		
40 mm	6FX1 121-4BE01	K 24	5	5	
40 mm	6FX1 121-4BF01	K 25	5	5	5
40 mm	6FX1 121-4BG01	K 26	10		
40 mm	6FX1 121-4BH01	K 27	10	10	
40 mm	6FX1 121-4BJ01	K 28	10	5	
40 mm	6FX1 121-4BK01	K 29	10	5	5

5 -fold EXEs 10 -fold EXEs

The order No. of the measuring-circuit module according to the complement variation with EXEs and corresponding width of the modules.

© Siemens AG 1990 All Rights Reserved 6ZB5 410-0EN02

10.1.6 Input signals with integrated EXE

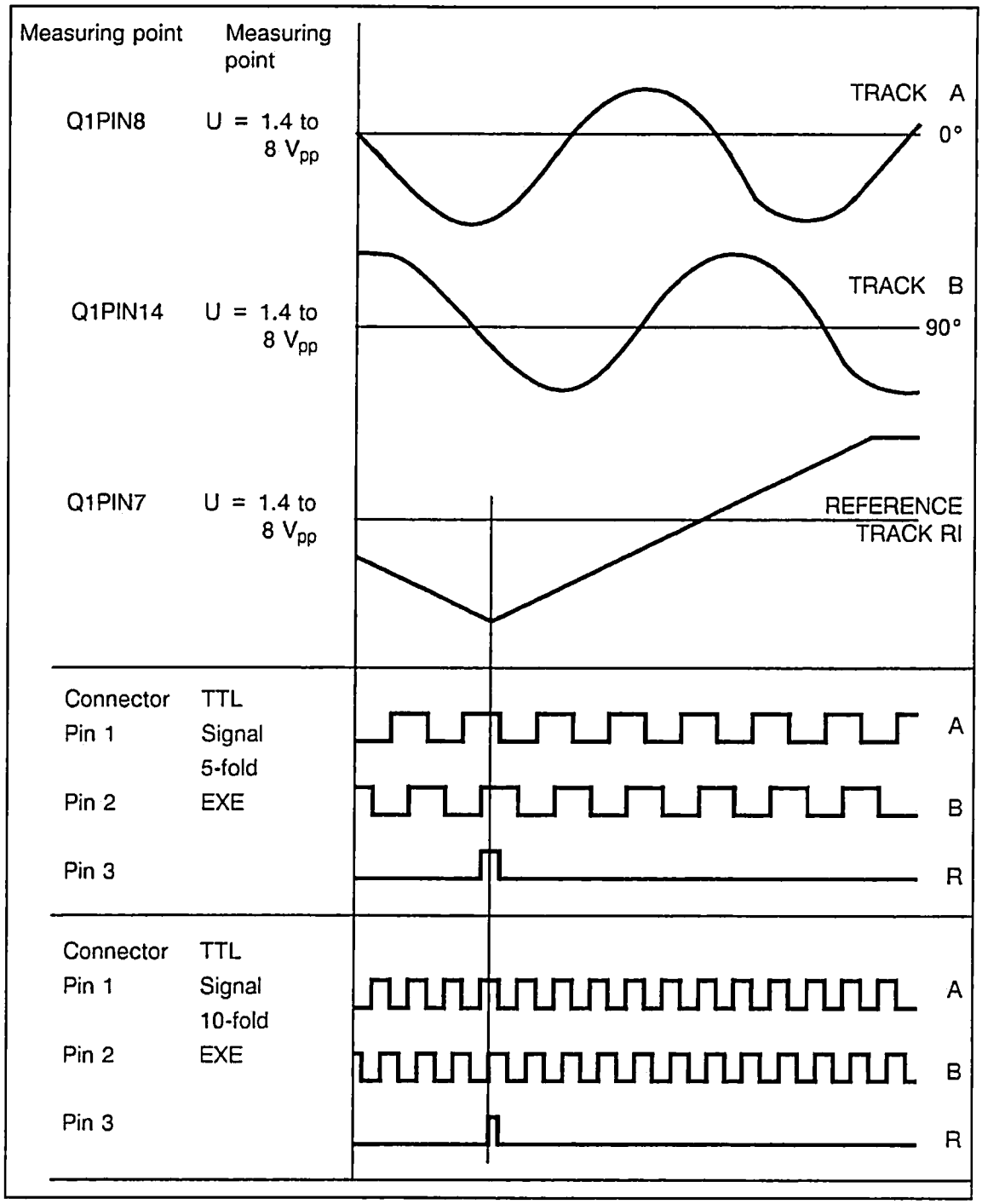

Input signals with integrated EXE

Additional data

- Measuring of Q1 signals earth-free with respect to measuring point Uo
- Phase angle 90° ± 12° from 0°/90°
- Response threshold for fault signal U = (0.7 ± 0.5) V_{pp}, behind amplifier Q1
- Signal size input EXE tracks A and B approx. 11 µA
- Reference track approx. 3.5 µA

© Siemens AG 1990 All Rights Reserved 6ZB5 410-0EN02

10.1.7 Connector pin assignments for setpoint output

The NC outputs the setpoint speeds and axis-specific servo enable signals (non-floating switching contact) over a 25-pin connector.

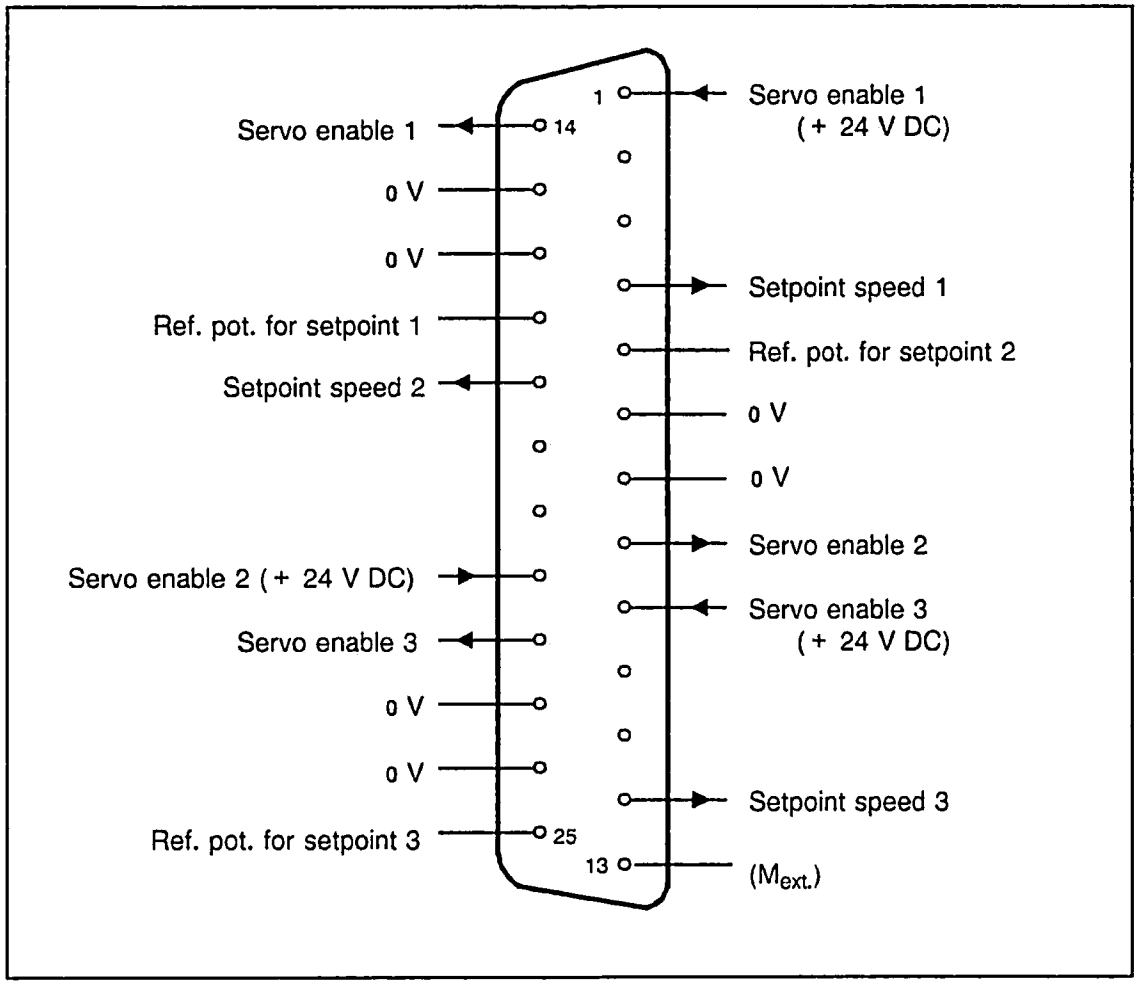

Connector pin assignments for setpoint output

Characteristic values

- Setpoint speed

Analog voltage	Max. ±10 V (hardware limitation ±14 V)
Current	Max. 2 mA

- Servo enable

Supply voltage	20 to 30 V DC incl. ripple
Current	Max. 100 mA (short-circuit-proof)
Non-floating switching transistor	

© Siemens AG 1990 All Rights Reserved 6ZB5 410-0EN02

10.1.8 Equivalent circuit diagram of the setpoint speed output (for one axis)

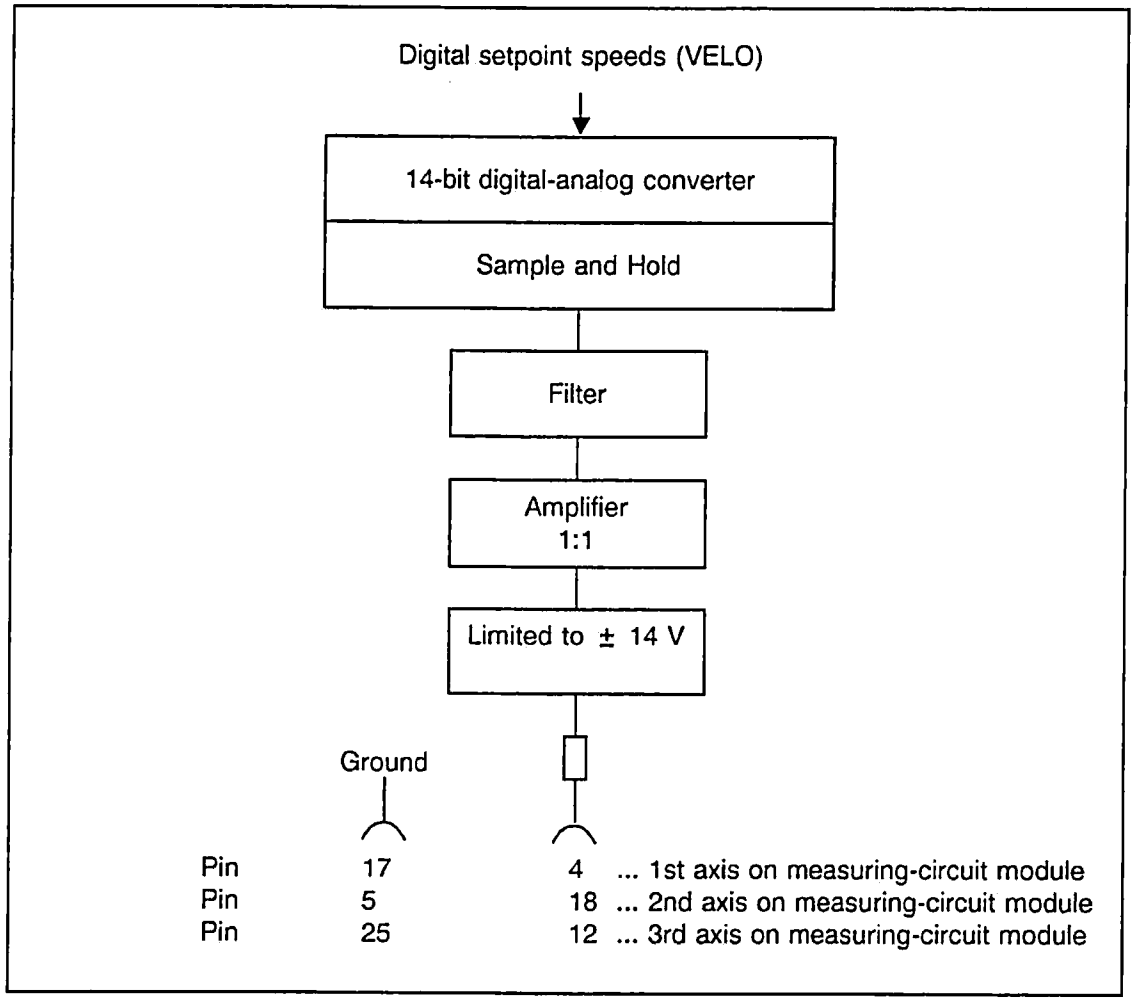

Equivalent circuit diagram of the setpoint speed output

© Siemens AG 1990 All Rights Reserved 6ZB5 410-0EN02

10.2 HMS measuring circuit module 6FX1 145-6B□00

□ = A With submodule interface 40 mm wide
□ = B Without submodule interface 20 mm wide

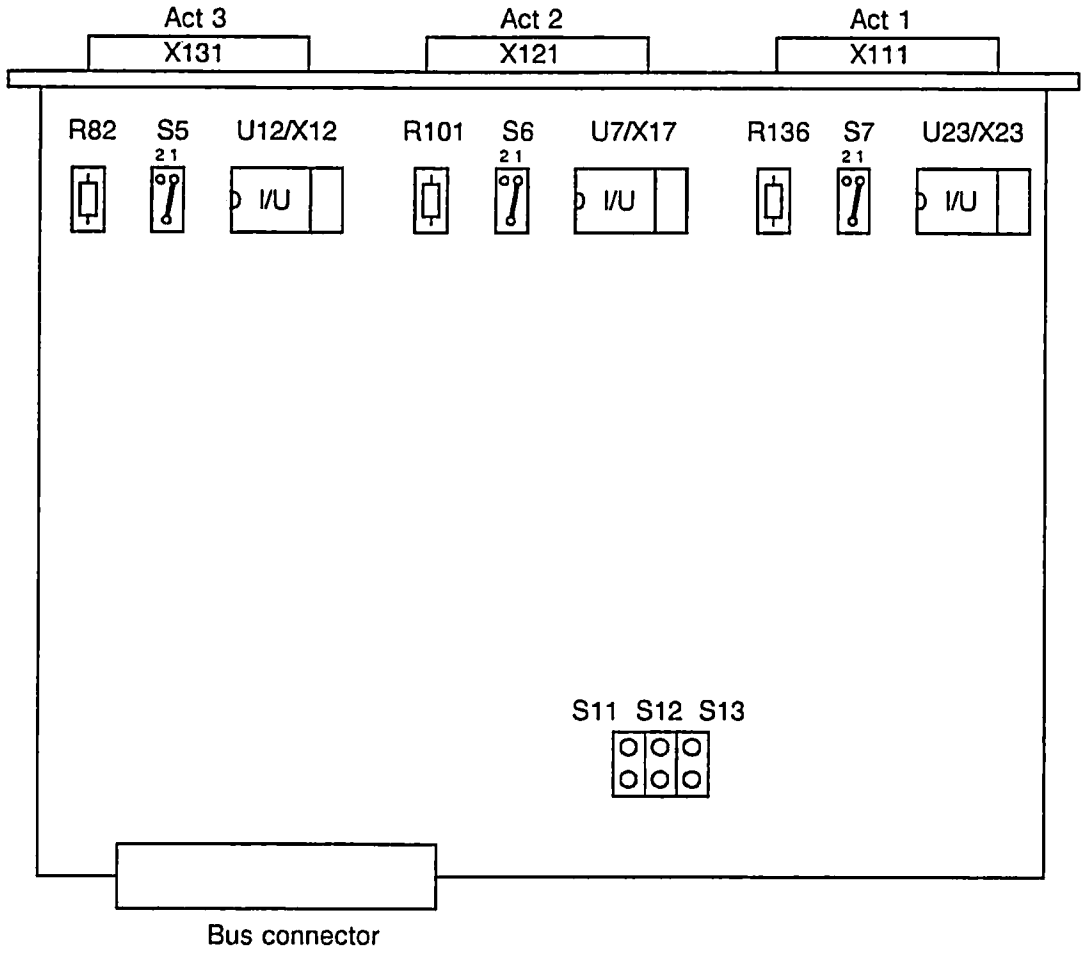

Encoder power supply:

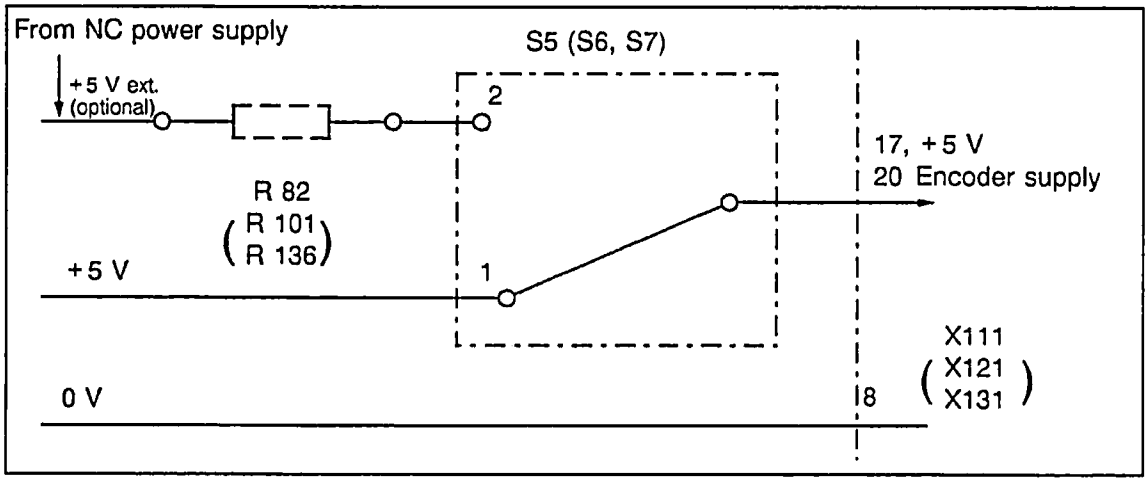

© Siemens AG 1990 All Rights Reserved

The jumpers S11, S12, S13 are open.

On each of the two HMS measuring circuit modules, 3 measuring circuits/actual value inputs are provided for connecting 3 axes with incremental position encoders. The double-width module additionally incorporates 3 submodule slots. 1 analog measuring circuit setpoint submodule (HMS setpoint submodule) or 1 SIPOS absolute encoder submodule + 1 measuring circuit setpoint submodule can be inserted in each of the slots. Both modules can be combined such that the double-width HMS measuring circuit module incorporates the measuring circuit setpoint submodules for all 6 axes/spindles. (A SIPOS absolute encoder submodule cannot be inserted in this case).

Note:

- The SIPOS absolute encoder submodule can be inserted only in the upper 2 submodule slots of the HMS measuring circuit module.
- An I/V hybrid that can be inserted in the module also enables linear scales with unconditioned current signals to be connected to the HMS module. Each of the 3 measuring system inputs on the HMS module can be provided with an I/V hybrid.

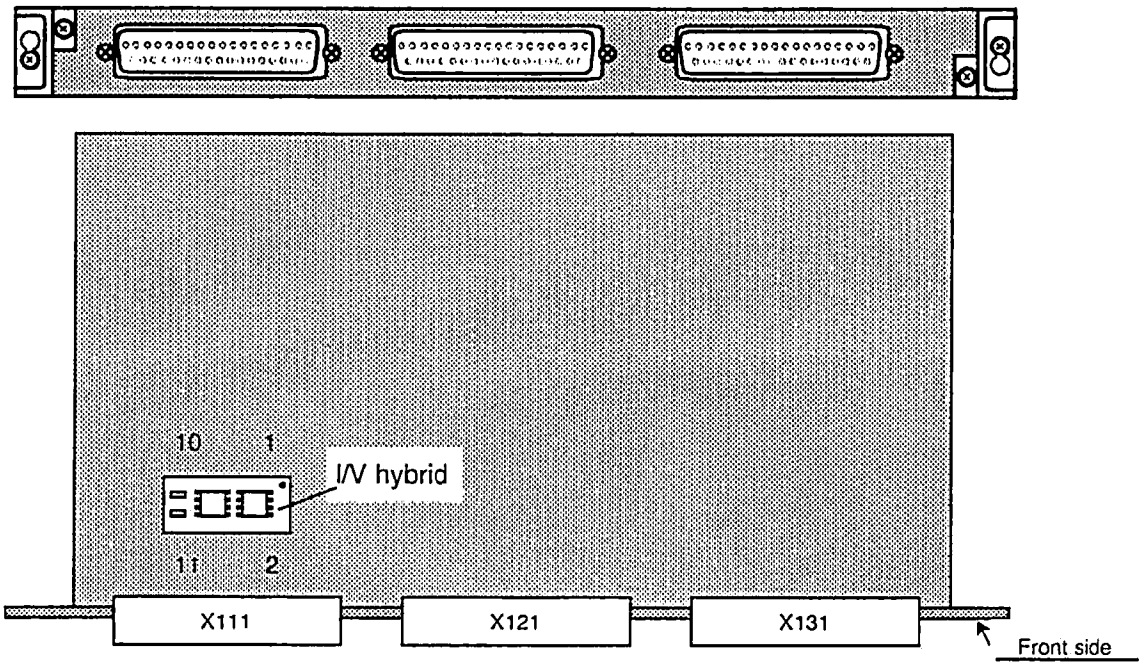

The I/V hybrid, as shown above, is plugged in the socket with pins 2 and 11 pointing to the front side.

I/V hybrid (I/V: Current/voltage conversion)

The HMS measuring circuit module can be used only for SIPOS encoders with unconditioned voltage signals as standard. Linear scales with unconditioned current signals can be connected as an option, if an I/V hybrid is plugged into the jumpering sockets concerned (U12, U17, U23) instead of the short-circuit connector. This direct connection is only possible with cables up to a length of 18 m for reasons of noise immunity. For cables longer than 18 m a converter box must be provided which converts the current signals into voltage signals. Refer to the Mounting Instructions for mounting the I/V hybrid.

© Siemens AG 1990 All Rights Reserved

Order No.:	
I/V hybrid:	6FC3 988-7CN

Amplifier for unconditioned current signals (l > 18 m)	
Order No.:	6FC9 320-4HM12

Encoder signal routing interface

Connector designations U12 (X12), U17 (X17), U23 (X23)

20-pin IC socket (DIL 20) for connecting a current-voltage converter hybrid when using encoders with unconditioned current signals (option).

Order No.: 6FC3 988-7CN

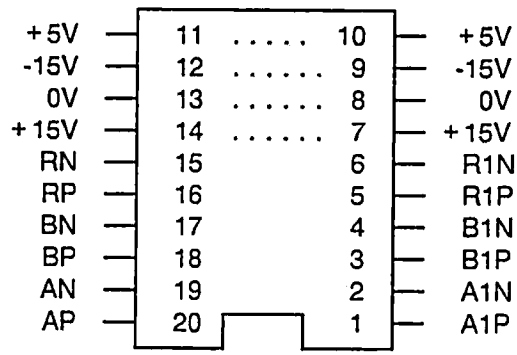

A1P	Encoder signal	A	(unconditioned voltage or current signal)
A1N	Encoder signal	*A	(unconditioned voltage or current signal)
B1P	Encoder signal	B	(unconditioned voltage or current signal)
B1N	Encoder signal	*B	(unconditioned voltage or current signal)
R1P	Encoder signal	R	(unconditioned voltage or current signal)
R1N	Encoder signal	*R	(unconditioned voltage or current signal)
AP	Encoder signal	A	(unconditioned voltage signal)
AN	Encoder signal	*A	(unconditioned voltage signal)
BP	Encoder signal	B	(unconditioned voltage signal)
BN	Encoder signal	*B	(unconditioned voltage signal)
RP	Encoder signal	R	(unconditioned voltage signal)
RN	Encoder signal	*R	(unconditioned voltage signal)

When SIPOS encoders are used which supply an unconditioned voltage signal (standard), the interfaces are fitted with short-circuit coding connectors (X12, X17, X23) that connect opposite pins (1-20, 2-19, 3-18, ...). The pins for the supply voltages are already interconnected on the module.

© Siemens AG 1990 All Rights Reserved

HMS setpoint submodule 6FX1 132-5BA00

The submodule is plugged in the specified interface in HMS measuring circuit module 6FX1 145-6BA00 (double-width module with submodule interface). Setpoints for up to 3 axes/spindles can be output via a submodule. A maximum of 2 HMS setpoint submodules can be inserted in HMS measuring circuit module. The additional submodule can be used only in conjunction with the HMS measuring circuit module 6FX1145-6BB00 (single-width module without submodule interface) . This results in the following maximum configuration for the SINUMERIK 810 (on the SINUMERIK 820 more space is available in the subrack):

1 HMS measuring circuit module with submodule interface
1 HMS measuring circuit module without submodule interface
2 HMS setpoint submodule

Minimum configuration when using HMS:

1 HMS measuring circuit module with submodule interface
1 HMS setpoint submodule

Restrictions:

If a SIPOS absolute encoder submodule is plugged in the HMS measuring circuit module, only one additional HMS setpoint submodule can be inserted in this module.

Output for servo enable

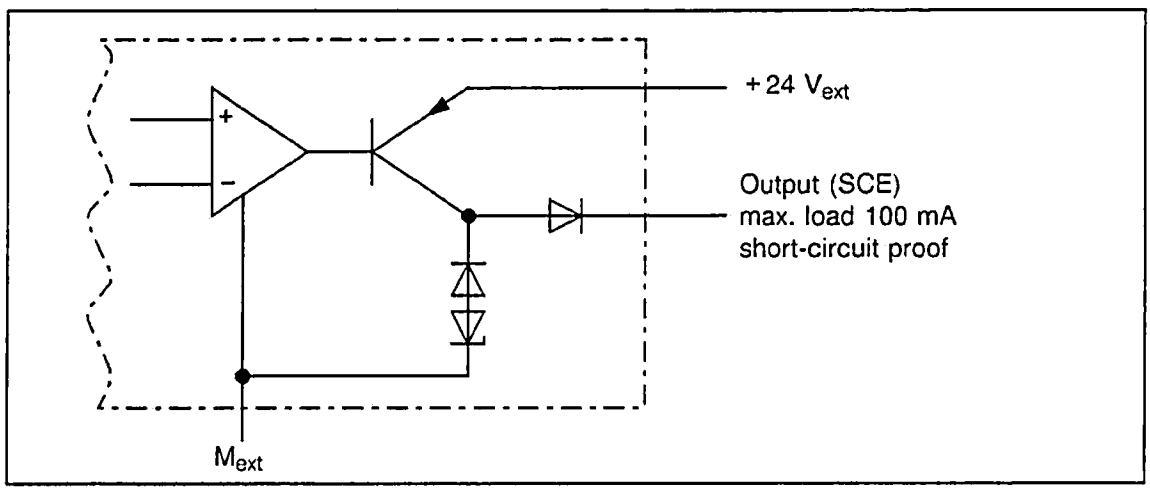

SIPOS absolute encoder submodule G33961-A3729-L1

One SIPOS absolute encoder submodule can be plugged in the upper two submodule slots on the double-width HMS measuring circuit module, allowing simulation of absolute measured values for all 3 inputs. However, in this case, only one additional HMS setpoint submodule can be inserted. A battery submodule can be plugged on the SIPOS absolute encoder submodule to store the absolute values in order to obviate the risk of power supply failure.

SIPOS absolute encoder 6FC9 320-3CT

Multiturn absolute encoder with 2500 increments.

Accompanying cable 6FC9 344-4D□.

The SIPOS encoder system is a multiturn absolute encoder that operates absolutely on power up and incrementally during operation.

© Siemens AG 1990 All Rights Reserved

In order to reduce the size of the unit, part of the encoder electronics have been transferred to a special submodule, the so-called absolute submodule.

The NC requests the absolute value from the absolute encoder after every POWER ON and then calculates the absolute machine position. The absolute encoder then operates as a standard incremental position encoder with amplified sine/cosine signals.

The coded disk information in the form of cyclic absolute values and the count of a buffered revolutions counter are used to determine the absolute position data. The back-up battery for 3 axes is arranged on the absolute submodule.

Basic encoder data:

Maximum sampling frequency	:	500 kHz
Disk increments:		2500
Revolutional information:		16 bits
Switch on accuracy:		1 µm, at 10 mm spindle pitch (10 000 increments./rev)
Error information:		8 bits
Back-up:		5800 hours for 3 encoders, separate battery monitor

The condition of the backup battery is checked every 10 minutes also during operation and an error message is output by the control in the event of battery failure.

An additional back-up in the encoder enables the measuring circuit module and the encoder cable to be replaced without absolute information being lost.

This backup is maintained over a period of up to 5 hours.

© Siemens AG 1990 All Rights Reserved

10.3 HMS measuring-circuit module

10.3.1 Connector pin assignments for actual-value input

The actual values are supplied to the control through 25-pin connectors (6FX1145-6BB..., 6FX1145-6BA...).

1st actual-value connector → encoder 1 (X111)
2nd actual-value connector → encoder 2 (X121)
3rd actual-value connector → encoder 3 (X131)

Incremental voltage encoders (SIPOS encoders) are connected.

One variant also allows the use of current encoders (measuring head of glass scale).

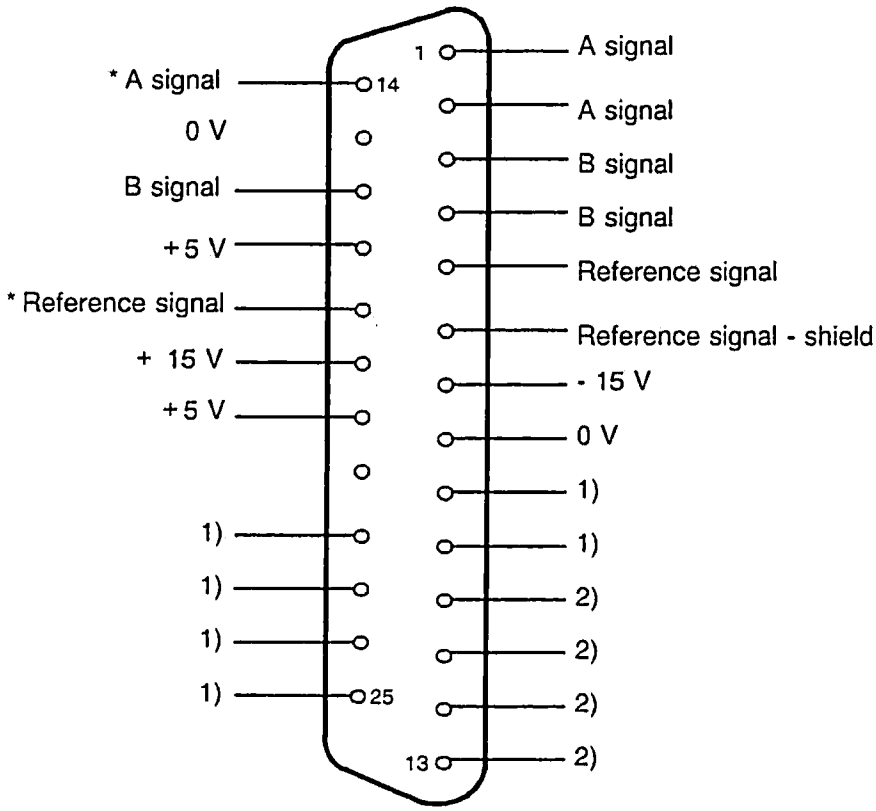

1) Pins not assigned on 840

2) Pins available on connector X131 only, and not assigned on 840

© Siemens AG 1990 All Rights Reserved 6ZB5 410-0EN02

10.4 Serial interface (RS232C (V.24) + 20 mA)

The SINUMERIK 840 is equipped with up to 2 serial interfaces:

1st interface	RS232C (V.24) + 20 mA	Interface-CPU	6FX1123-3CA	X131 (standard)
2nd interface	RS232C (V.24)	Interface-CPU	6FX1123-3CA	X141 (option)

Note:

The 20 mA interface can be operated in full-duplex mode only. The "UNIVERSAL INTERFACE" Planning Guide provides detailed descriptions of the serial interfaces.

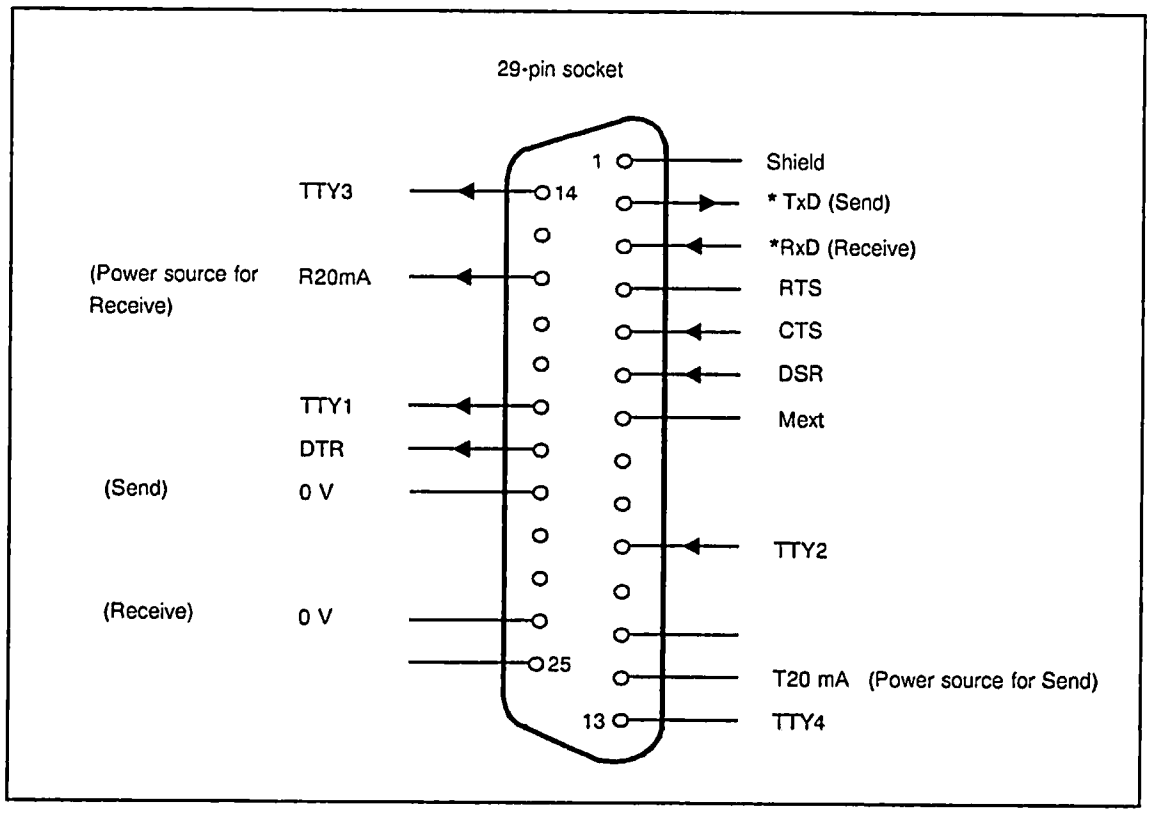

Characteristic values

- RS232C (V.24): Level ± 12 V
  *RxD and *TxD signals are active low
- 20 mA: Active or passive determined in connector

© Siemens AG 1990 All Rights Reserved 6ZB5 410-0EN02

10.5 Interface submodule for electronic handwheels (6FX1144-0BA . .)

10.5.1 Connector pin assignments

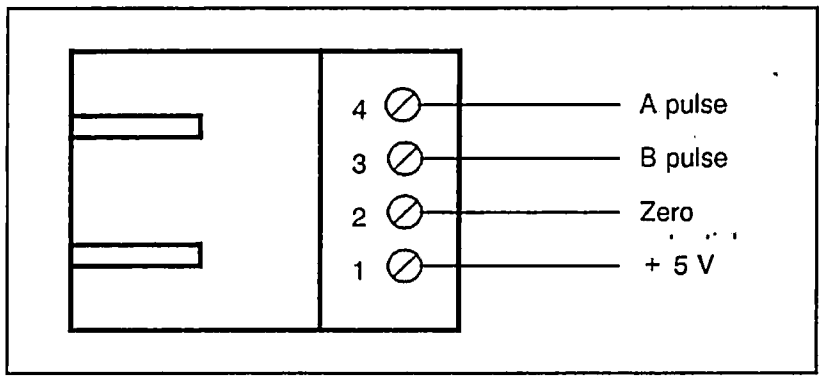

The control can supply max. 150 mA per handwheel at the + 5 V pin.

The supply voltage for the handwheel and the pulses from the handwheel are routed over a 4-pin connector.

On the module, connectors X111 and X121 are provided for the 2 handwheels.

10.5.2 Equivalent circuit diagram

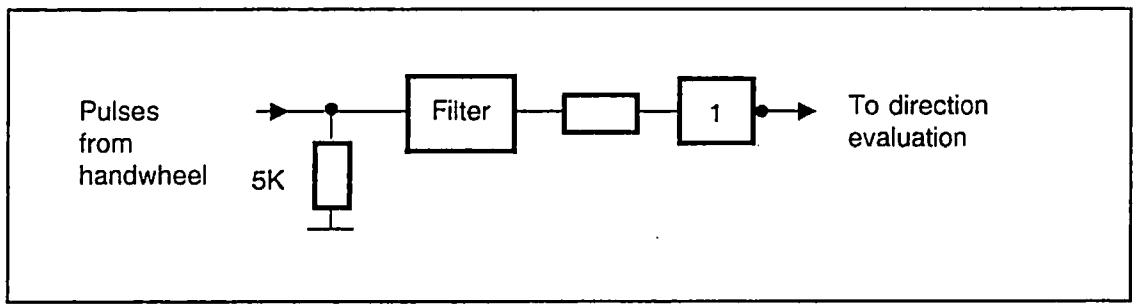

Two pulses (A and B) are output with 90° offset on a change from one latched position to the next (pulse/no-pulse ratio 1:1). The outputs are at Low in the latched positions.

© Siemens AG 1990 All Rights Reserved 6ZB5 410-0EN02

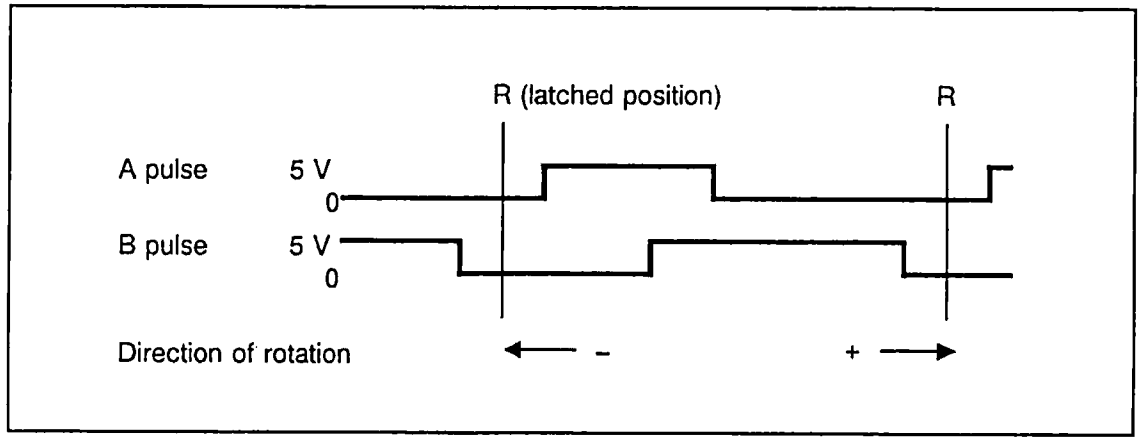

Max. frequency ≤ 5 KHz
Low level: ≤ 0.9 V
High level: ≥ 3.6 V
Voltage: max. 5.25 V

10.6 Measuring-pulse inputs (sensors)

Refer to the Interface Description for a description of the jumper configuration on the 6FX1 144-0BA.. PCB.

Note:

The NC program can activate only ***one*** of the two measuring-pulse inputs with @720.

10.7 NC Ready

Floating contact on the interface CPU 6FX 1123-3CA..., connector X111. The contact is open when all machine movements must be brought to a standstill due to an NC error. Also refer to Part 2 of the Interface Description.

© Siemens AG 1990 All Rights Reserved 6ZB5 410-0EN02

11 Data Protection, General Reset

11.1 Data areas

The following data areas are battery-backed:

NC data (RAM on NC CPU, 6FX 1123-1CA..):

- NC machine data
- Cycle machine data
- Setting data
- Main programs
- Subroutines
- PLC message texts
- Tool offsets
- Zero offsets
- R parameters

PLC machine data (RAM on IFC, 6FX 1123-3CA00)

PLC data (RAM on PLC CPU, 6FX 1138-6BL..):

- Data blocks
- User program (which is normally in EPROM)

The following may result in a loss of data:

- Battery failure or replacing of the battery with the control switched off
- Connection between battery and CPUs open
- NC CPU defective or disconnected (NC data)
- PLC CPU defective or disconnected (PLC data)
- IFC defective or disconnected (PLC MD)

The data must be backed up as soon as all installation procedures have been completed (e.g. on floppy disk or punched tape). Particular care must be taken as regards the backup of machine data.

© Siemens AG 1990 All Rights Reserved 6ZB5 410-0EN02

11.2 Data backup with the programmer

11.2.1 Introduction

Using the PG 685/PG 730/PG 750 and the appropriate TRANS-PGIN/PCIN software, all data and programs of the SINUMERIK 840 can be input and output via the RS232C (V.24) interface. Part programs can be developed and documented using the ED, WordStar or VEDIT editor.

This section describes the operating sequence on the SINUMERIK 840, data handling using the PG 685/PG 730/PG 750 with the appropriate operating system and TRANS-PGIN/PCIN.

The assignment of operating systems to programmers and the order numbers of the appropriate TRANS-PGIN/PCIN software are shown in the following table:

Program-mer	Operating system	Interface	Order No. of German Trans-PGIN/PCIN	Order No. of English Trans-PGIN/PCIN
PG 685	PCP/M-86	Printer	6FC3 981 - 7AL	6FC3 981 - 7BL
PG 685	MS-DOS 2.11	Printer	6FC3 981 - 7AP	6FC3 981 - 7BP
PC 16-20	MS-DOS 3.1	COM 1	6FC3 981 - 7AN	6FC3 981 - 7BN
PG 750	MS-DOS 3.2	COM 2	6FC3 981 - 7AN	6FC3 981 - 7BN
PC 32-05	MS-DOS 3.2	COM 3	6FC3 981 - 7AR	6FC3 981 - 7BR
PCIN version 2.0 with operator guidance				
PG 730	PCP/M	AUX0 / AUX1	6FC3 981 - 7CA 00*	
PG 750	PCP/M	AUX0 / AUX1	6FC3 981 - 7CA 00*	
PG 730	MS-DOS	COM1 - COM4**	6FC3 981 - 7CB 00*	
PG 750	MS-DOS	COM1 - COM4**	6FC3 981 - 7CB 00*	
PCs	MS-DOS	COM1 - COM4**	6FC3 981 - 7CB 00*	

* In several languages (English, German, French, Italian, Spanish)

** The number of COMs depends on the configuration of the programmer

11.2.2 Using diskettes

The operating system is loaded immediately after the programmer is switched on.

PG 675: CP/M-86: The operating system is loaded from the hard disk

PG 710/PG 730
PG 750: MS-DOS 3.10: When a diskette has been replaced in disk drive A, the PG waits for the operating system on the diskette).

© Siemens AG 1990 All Rights Reserved 6ZB5 410-0EN02

11.2.2.1 Formatting empty disks

A diskette must be formatted before data can be stored on it (Note: the write protection must not be in position either).

PG 685: PCP/M-86

Insert the diskette to be formatted into drive A: and format it with the program DSKMAINT.

Call : B> **DSKMAINT** **Return** key

The main menu of this program appears on the screen. Insert the diskette to be formatted into drive A: and then press **f7** to select formatting. The formatting menu appears on the screen. Press **f1** to select the diskette in drive A: for formatting the diskette in drive A:

Response: This operation will erase all data on drive A:
Is this what you want? (Yes /No)

Input: **Y** or **N** (Yes/No)
When Y has been entered the system starts the formatting routine for the disk in drive A:

After the routine has finished, a prompt asks whether you wish to format another diskette. Enter N for "no" and press return key to leave the formatting function and return to the main menu.

PG 730/PG 750: MS-DOS 3.10

Format the diskette with the program **FORMAT.**

Call:

- for 1.2 Mbytes: C> **Format A: /V** **Return** key
- for 360 Kbytes: C> **Format A: /4 /V** **Return** key

Response: Insert new diskette for drive A: and strike ENTER when ready. When you have pressed the RETURN key, the system starts the formatting routine for the diskette.

Response: Formatting ...-
When formatting is complete the following message appears:
Formatting ... Format complete
Prompt: Volume label
(11 characters, enter RETURN for none)

After you have entered the volume label and/or pressed the RETURN key, a prompt asks whether you wish to format another diskette. Enter N for "no" and press return key to leave the formatting function.

© Siemens AG 1990 All Rights Reserved 6ZB5 410-0EN02

11.2.2.2 Copying diskettes

For safety reasons it is always advisable to make two diskettes (one working diskette and one backup copy).

PG 685: PCP/M-86

You can copy diskettes with the program **DSKMAINT.**

Call: B> **DSKMAINT** **Return** key

The main menu of this program appears on the screen. Press **f3** to select copying. Press **f1** twice to select both the source and the destination drives (there is only one drive).

Response: Copying from diskette in drive A:
to diskette in drive A:
This operation will erase all data on drive A:
Is this what you want? (Yes/No)

Input: **Y** or **N** (Yes/No)

Response: Copying from diskette in drive A:
to diskette in drive A:
INSERT SOURCE DISKETTE AND PRESS ANY KEY

Insert the diskette to be copied and press any key.

Response: Copying from diskette in drive A:
to diskette in drive A:
INSERT DESTINATION DISKETTE AND PRESS ANY KEY

Insert an empty diskette and press any key.

The diskette is copied in several parts. The diskette to be copied (source) and the empty diskette (destination) must therefore be inserted one after the other several times. When copying is complete a prompt asks whether you wish to copy another diskette. Press **f8** to leave the copying function and return to the main menu.

PG 730/PG 750: MS-DOS 3.10

You can copy diskettes with the program **DISKCOPY.**

Call: C> **DISKCOPY A: B:** **Return** key

Response: Insert SOURCE diskette into drive A:

Insert TARGET diskette into drive B:

Press any key when ready.

Insert the diskette to be copied into the source drive A: and a formatted empty diskette into the target drive B:. When you press any key the program starts copying.

After the routine has finished, a prompt asks whether you wish to copy another diskette. Enter N for "no" and press return key to leave the copying function.

© Siemens AG 1990 All Rights Reserved 6ZB5 410-0EN02

Note:

If you only have one drive it is both the source and the target drive while copying. In this case, the diskette is copied in several parts. The diskette to be copied (source) and the empty diskette (target) must therefore be inserted one after the other several times.

11.2.2.3 Changing diskettes

In the PG 675, every time a diskette is changed, the newly inserted diskette must be announced with CTRL C if you are going to write to it. If you do not do this, edited files cannot be stored because changing diskettes activates a write protection (message: Bdos Error R/O).

In the PG 685/PG 730/PG 750 you do not need to announce a newly inserted diskette with CTRL C after a diskette change in order to be able to write to it.

11.2.2.4 Listing the directory

With the following functions the hard disk or diskette directory can be listed on the screen or printed out (hardcopy key) and the diskette status can be checked.

PG 685: PCP/M-86

Call:	B> **DIR**	**Return** key
or	B> **DIRS**	**Return** key
or	B> **DIR A:**	**Return** key
or	B> **DIRS A:**	**Return** key

The files stored on the hard disk or on the diskette in drive A: are listed without any indication of their size. With the DIR command the names of files with the DIR attribute are listed. Files with the SYS attribute are listed with the DIRS command.

Call:	B> **DIR [SIZE]**	**Return** key
or	B> **DIR A: [SIZE]**	**Return** key

The files are listed with an indication of the size of each as well as the total memory occupied on the hard disk or the diskette in drive A:.

Call:	B> **SHOW**	**Return** key
or	B> **SHOW A:**	**Return** key

Response: e.g. A: RW, free space 84 Kbytes

You can display the free space on the hard disk or diskette with the command SHOW. The status "RW" (READ/WRITE) or "RO" (READ ONLY) is also shown. An empty diskette contains 694 Kbytes.

© Siemens AG 1990 All Rights Reserved 6ZB5 410-0EN02

PG 730/PG 750: MS-DOS 3.10

Call: B(C) > **DIR [/p] [/w]** **Return** key

or B(C) > **DIR A(B): [/p] [/w]** **Return** key

The files stored in the current directory of the hard disk or on the diskette in drive A(B) are listed. For every file the size in bytes, the date and the time of last processing are specified. The free space and the number of files in the directory are also displayed.

An empty diskette for the PG 750 contains 1.2 Mbytes or 360 Kbytes.

The DIR command has two options:

The /p option activates page mode. Output of the directory is delayed after each screen page until any key is pressed.

The /w option activates the wide display in which the file designations are output without additional information. Five files are displayed per line.

11.2.3 File handling

Files are stored on diskette or hard disk. They are addressed via their file designations.

The full file designation consists of three parts:

1. Name of the drive
2. File name (without extension)
3. Data type (extension)

Example: B > **VEDIT A:TESTPROG.SY8**

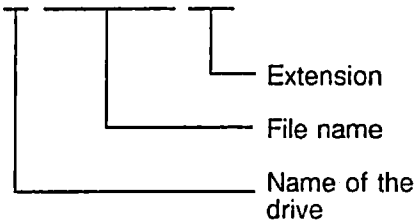

The file name consists of 1 to 8 characters. The file name is separated from the extension by a full stop. The extension consists of 1 to 3 characters. The file name and the extension can be freely selected. They can contain any characters except certain special characters (see the User's Guide to the operating system of your programmer).

The drive name is always placed in front of the file name when the file addressed is not on the current drive. If the file is on the current drive the name of the drive is not required.

© Siemens AG 1990 All Rights Reserved 6ZB5 410-0EN02

11.2.3.1 Listing files

The command file TYPE is used to display the contents of any file on the screen. The command makes it easier to verify the contents of a file because you do not need to run an editor.

TYPE <drive>:<file designation> **Return** key

Example: **TYPE A:PC.DOK**

If the file is large you can stop the screen and restart it.

PG 685: PCP/M-86 stop with CTRL S, restart with CTRL W

On the PG 750 you can display the file page by page if you use the following call:

TYPE <drive> : <file designation> | More **Return** key

Example: TYPE A: PC.DOK | More

11.2.3.2 Copying files

You can copy files with the command file PIP or Copy.

- Copy keeping the old name

  PG 685: PCP/M-86

  B>PIP B:=A:TEST.805 copy from A: to hard disk
  B>PIP A:=B:TEST.805 copy from hard disk to A:

  PG 730/ 750: MS-DOS 3.10

  C>COPY TEST.810 A: copy from hard disk C: to drive A:

- Copy and rename

  PG 685: PCP/M-86

  B>PIP TEXT.NEU=TEXT.ALT on hard disk
  B>PIP A:TEST.1=A:TEST0 on diskette in drive A:

  PG 730/PG750: MS-DOS 3.10

  C>COPY TEXT.ALT = TEXT.NEU on hard disk
  C>COPY A:ALT.TXT = A:NEU.TXT on diskette in drive A:

- Peripheral device as the destination (NC or printer)

  PG 685: PCP/M-86

  B>PIP LST:=A:TESTPROG.805 file on diskette in drive A:

  PG 730/PG 750: MS-DOS 3.10

  C>COPY TESTPROG COM1 file on hard disk
  C>COPY A:TESTPROG COM1 file on diskette on drive A:

© Siemens AG 1990 All Rights Reserved 6ZB5 410-0EN02

11.2.4 Parameterizing interfaces for data transfer with the PG

11.2.4.1 Interface parameters on the SINUMERIK 805, 810, 820, 840, 880

How to input and modify the interface parameters is described in the in the Operator's Guide of your CNC control.

11.2.4.2 Interface parameters on the programmer

Before the printer interface is called on the PG 685, data transfer to the NC must be initialized to 7 data bits and even parity in the following manner:

DEVICE LPT0 [DAT = 7] (7 data bits) Return key
DEVICE LPT0 [PAR = EVEN] (even parity) Return key

These inputs are not necessary if the **STARTUP.SUB** file supplied is copied onto the system diskette of the PG 635 or the hard disk of the PG 685. The two DEVICE commands are automatically executed by the **STARTUP.SUB** file whenever the operating system is loaded.

On the PG 730/PG 750 the interface is initialized by calling the **MODE** command.

Examples: MODE COM1:9600, e, 7, 2, p PG 730 (PG 750)

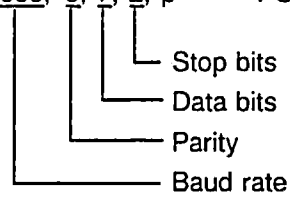

This call is not required if the command is written in the AUTOEXEC.BAT file. The interface is then initialized whenever the operating system is restarted.

11.2.4.3 Other baud rates (for PG 685 only)

When using the data cable as shown in 10.4.1 the baudrate must be set to 9600 baud. For other baud rates the connector to the printer interface must be changed as follows:

Pins (X → pin connected to pin 2)

Baud rate	3	4	17
9600	X	X	X
4800	X	0	X
2400	0	X	X
1200	X	0	0
600	0	X	0
300	X	X	0
110	0	0	X

© Siemens AG 1990 All Rights Reserved 6ZB5 410-0EN02

11.2.4.4 Data start identifiers

When the NC outputs data it transmits initial identifiers to indicate the type of data. When reading in from the PG 675 or PG 685 these initial identifiers must be available in the file in the same form.

% MPFxxxx	CR LF	Identifier for main programs
% SPFxxx	CR LF	Identifier for subroutines
% T E A 1	CR LF	Identifier for NC machine data
% Z O A	CR LF	Identifier for zero offsets
% T E A 2	CR LF	Identifier for PLC machine data
% R P A	CR LF	Identifier for R parameters
% S E A 1-4	CR LF	Identifier for setting data
% PCF	CR LF	Identifier for PLC alarm texts

11.2.5 How to transfer from the SINUMERIK 840 to the programmer

a) Cable connection to PG 685: RS232C (V.24) interface PRINTER
PG 730/PG 750: RS232C (V.24) interface COM1

b) Cable connection to NC: RS232C (V.24) interface (SS1)
RS232C (V.24) interface (SS2, option)

c) Load operating system: PCP/M-86 → PG 685
MS-DOS → PG 750

d) Initialise printer interface (see 11.2.4.2)

e) Select DATA TRANSMISSION dialog and set parameters as described in section 11.2.4.1:

Device type: RTS-LINE
Baud rate: 9600
Parity: none
Stopbits: 2

Branch to the DATA OUTPUT dialog with the softkey Read Out.

f) Select the data type to be transferred as described in the Operator's Guide.

g) Program call for transfer:

PG 685:B>PGIN <drive>:<file designation>
PG 730/PG 750:C>PCIN <drive>:<file designation>

h) Start the PG by pressing the RETURN key

i) Start the SINUMERIK 840 with softkey: [Start output]

Now the specified programs of the NC are stored on the specified drive in the programmer under the specified file designations.

© Siemens AG 1990 All Rights Reserved 6ZB5 410-0EN02

During transmission the character received is output on the screen and checked for overflow and step errors (e.g. due to incorrect baud rate). If such an error occurs transmission is aborted and an error text displayed. The PGIN and PCIN data receive programs can store programs with a length of up to 256 Kbytes.

The reception of data is terminated if:
1. 40 times 00hex was transmitted (output from NC)
2. The "***" was pressed on the PG 685 or the "ESC" key was pressed on the PG 750.
3. The number of received characters exceeds the 256 Kbyte limit.

If the first character (after 00hex) is a % or CR character the data start identifier is evaluated and the data type shown on the screen of the programmer after transmission.

After transmission of main programs or subroutines a directory of the transmitted program numbers and the length of each program is created (see examples). The characters are counted in the same way as in the SINUMERIK.

After transmission of other data the data type is displayed but no directory created.

If the data start identifier does not correspond to a known string the following message is displayed after transmission:
"unknown data"

However, the characters received are still stored on hard disk or diskette.

Examples:

Program call	Storage		
	In drive	File name	Directory name
PG 685			
A>PGIN NAME	A:	NAME	NAME.DIR
A>PGIN B:NAME	B:	NAME	NAME.DIR
B>PGIN NAME	B:	NAME	NAME.DIR
B>PGIN A:NAME	A:	NAME	NAME.DIR
PG 730/PG 750			
C>PCIN NAME	C:	NAME	NAME.DIR
C>PCIN A:NAME	A:	NAME	NAME.DIR
C>PCIN B:NAME	B:	NAME	NAME.DIR

If a file name is specified with an extension the extension DIR is not permissible because the directory is stored under that designation.

© Siemens AG 1990 All Rights Reserved 6ZB5 410-0EN02

With the call type <drive>:<file designation>.DIR you can display the directory of the main programs and subroutines transmitted.

Example:

B>**TYPE A:TEST-L.DIR**

```
L  95   1609 CH  L   97   1178 CH  L   98   310 CH  L  801    33 CH
L 803     42 CH  L  804     42 CH  L  805    58 CH  L  806    90 CH
L 951     75 CH  L  970    107 CH  L  971   104 CH  L  981    58 CH
L 990     54 CH  L  999     12 CH
```

Example:

B>**TYPE A:TEST-%.DIR**

```
% 120    105 CH    % 22    105  CH
```

11.2.6 How to transfer from the programmer to the SINUMERIK 840

a) Cable connection to PG 685: RS232C (V.24) interface PRINTER
PG 750:RS232C (V.24) interface COM1

b) Cable connection NC: RS232C (V.24) interface (SS1)
RS232C (V.24) interface (SS2, option)

c) Load operating system:
PCP/M-86 → PG 685
MS-DOS → PG 750

d) Initialise printer interface (see 10.4.3)

e) Select DATA TRANSMISSION dialog and set parameters as described in section 11.2.4.1:

Device type: RTS-LINE
Baud rate: 9600
Parity: none
Stop bits: 2

Branch to the DATA OUTPUT dialog with the softkey read out.

f) Program call for transfer:

PG 685:B>PIP LST: = <drive>:<file designation>[E]
PG 730/PG 750:C>COPY<drive>:<file designation>COM1

[E]: with display of the characters on the screen

g) Start the SINUMERIK 840 with softkey: Start input

© Siemens AG 1990 All Rights Reserved

h) Start the PG by pressing the RETURN key.

Now the specified file is loaded into the NC.

If several files must be transferred to the NC, the PIP program can be loaded to avoid repeated PIP system calls on the PG 675 and PG 685.

Example:

1st part	B>**PIP**	**RETURN** key
2nd part	***LST:=<DRIVE>:<FILE DESIGNATION>**	**RETURN** key

Only the second part of the call need be repeated with a new file name.

After termination of transmission you can leave the "PIP SYSTEM" by pressing the RETURN key.

11.2.7 Procedure for PG linkage to the SINUMERIK 840

The PLC interface must be switched over to S5 mode to transfer the PLC user program to the programmer. See Start-up Guide, Section 7.3 - Operation with PG for a more detailed description.

© Siemens AG 1990 All Rights Reserved

Cable name: : SIMATIC PG 635/PG 685 (TRANS-PG IN)
Order No. : 6FC9 344-1A ☐

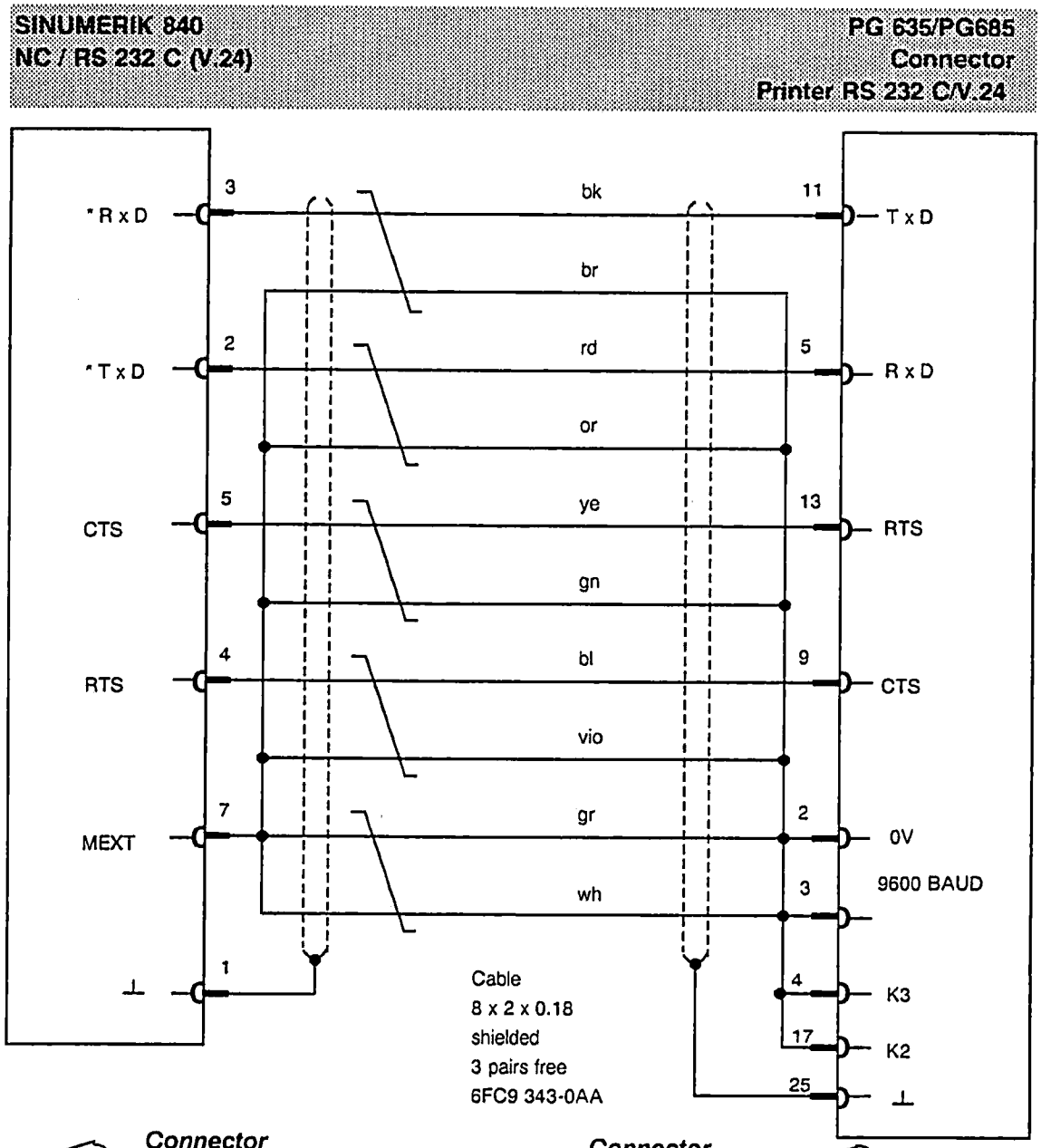

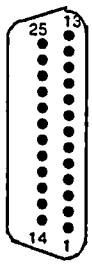

Connector
Position 1 below
subminature D
25-way, male
Connection side
Housing with slide latch
6FC 9 341 - 2AA
Designation: NC

Connector
Position 1 below
subminature D
25-way, male
connection side
Post Office housing

6FC 9 341 - 1ES
Designation: PG D

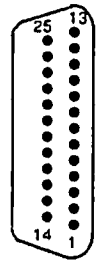

© Siemens AG 1990 All Rights Reserved

Cable name : SIMATIC PG 750 (TRANS PC IN and PLC programming)
PC (AT compatible)
Order No. : 6FC9 344-4R □

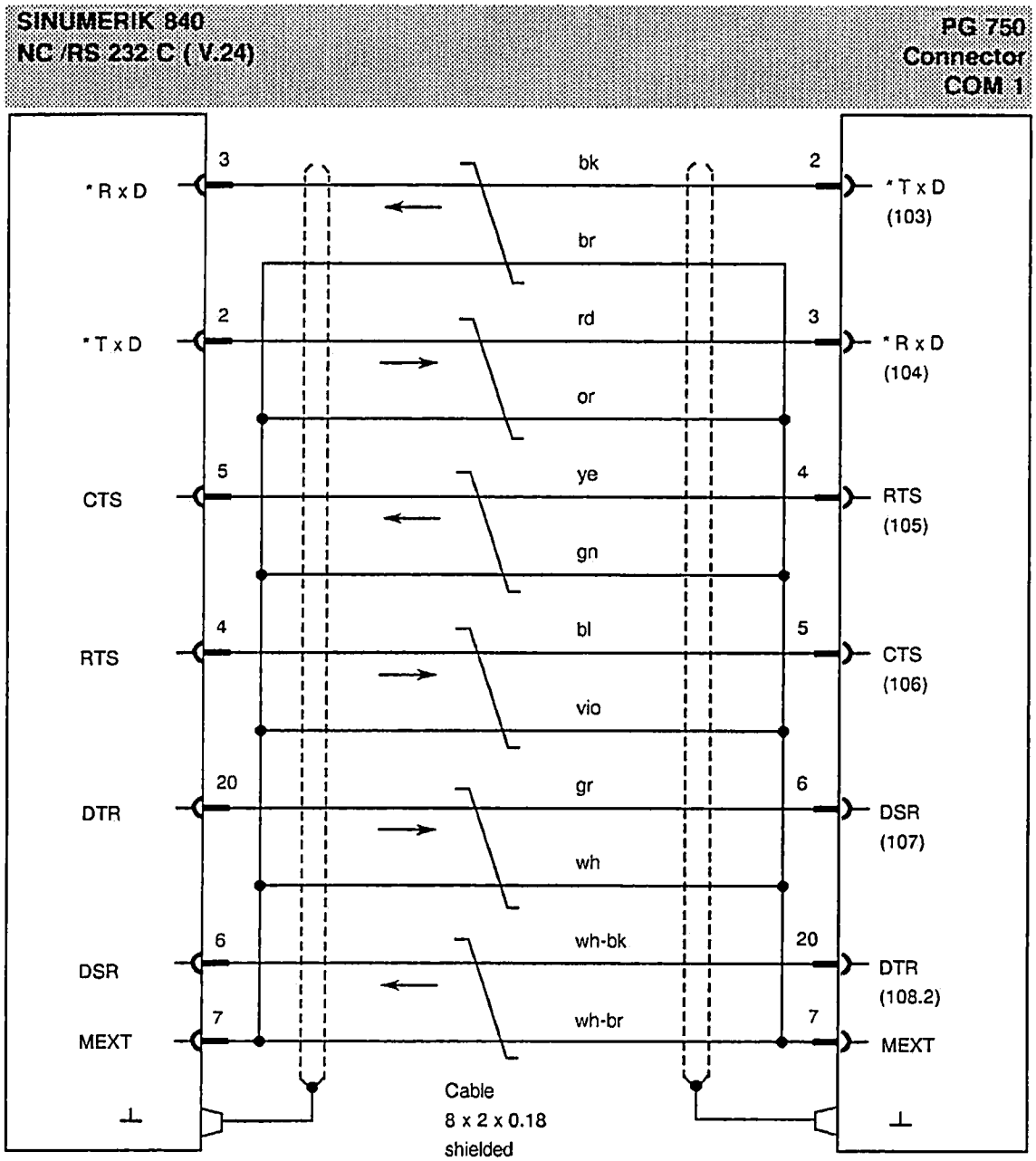

Connector
Position 1 below
subminiature D
25-way, male
Connection side
Housing with slide latch
6FC9 341-2AA
Designation: NC

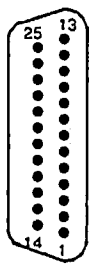

Connector code

- ● Coding pin
- × No coding pin

Connector
Position 1 below
subminiature D
2-way, male
Connection side
Post Office housing
6FC9 341-1ES
Designation: PC

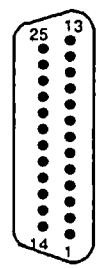

Connector code

- ● Coding pin
- × No coding pin

© Siemens AG 1990 All Rights Reserved

Cable name : SIMATIC PG 685/PG 750, interface PLC S5
Order No. : **6FC9 340-8G□**

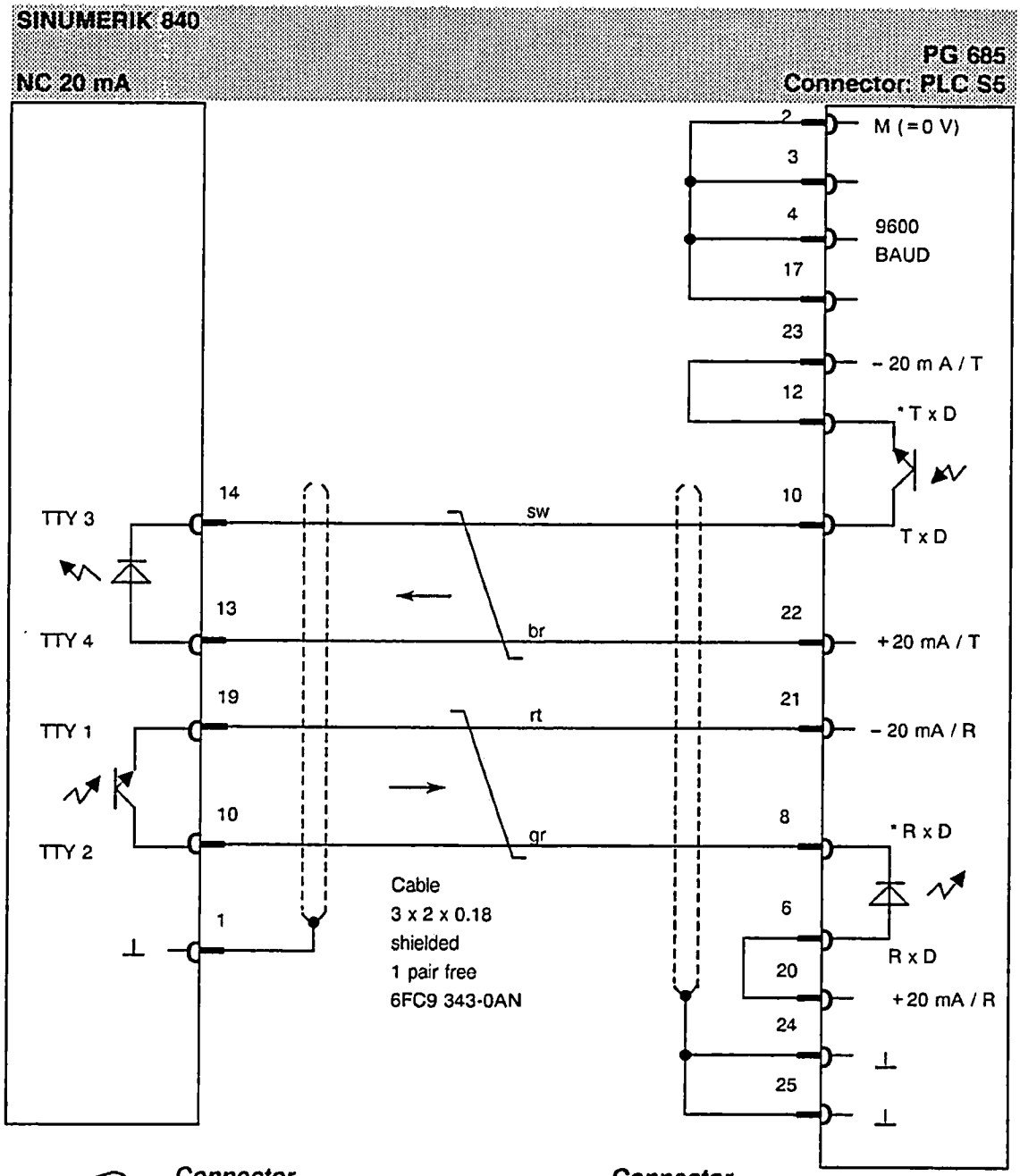

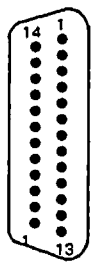

Connector
Position 1 below
subminiature D
25-way, male
Connection side
Housing with
slide latch
6FC9 341-2AA
Designation: NC

Connector
Position 1 below
subminiature D
25-way, male
Connection side
Housing with
slide latch
6FC9 341-2AA
Designation: PG AG

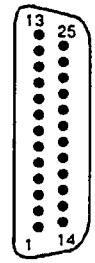

© Siemens AG 1990 All Rights Reserved

11.3 General reset mode

11.3.1 General remarks

When a data loss occurs, the data areas must be formatted in General Reset mode. Some data can also be initialized in this mode. The controls are delivered with formatted data.

The machine data are initialized to their default values or to the values required for the relevant configuration. These data need therefore not be formatted when the system is installed, and the General Reset mode need be invoked only in the situations discussed below.

- Loss of data
- PLC cold restart 1)
- PLC bootstrapping 1)
- Modification of machine data for TO area (NC MD 13, 210)
- Changes in displays

1) A cold restart can be executed on the PLC or PLC bootstrapped over the programmer or the mode switch on the PLC CPU.

11.3.2 Selecting the general reset mode

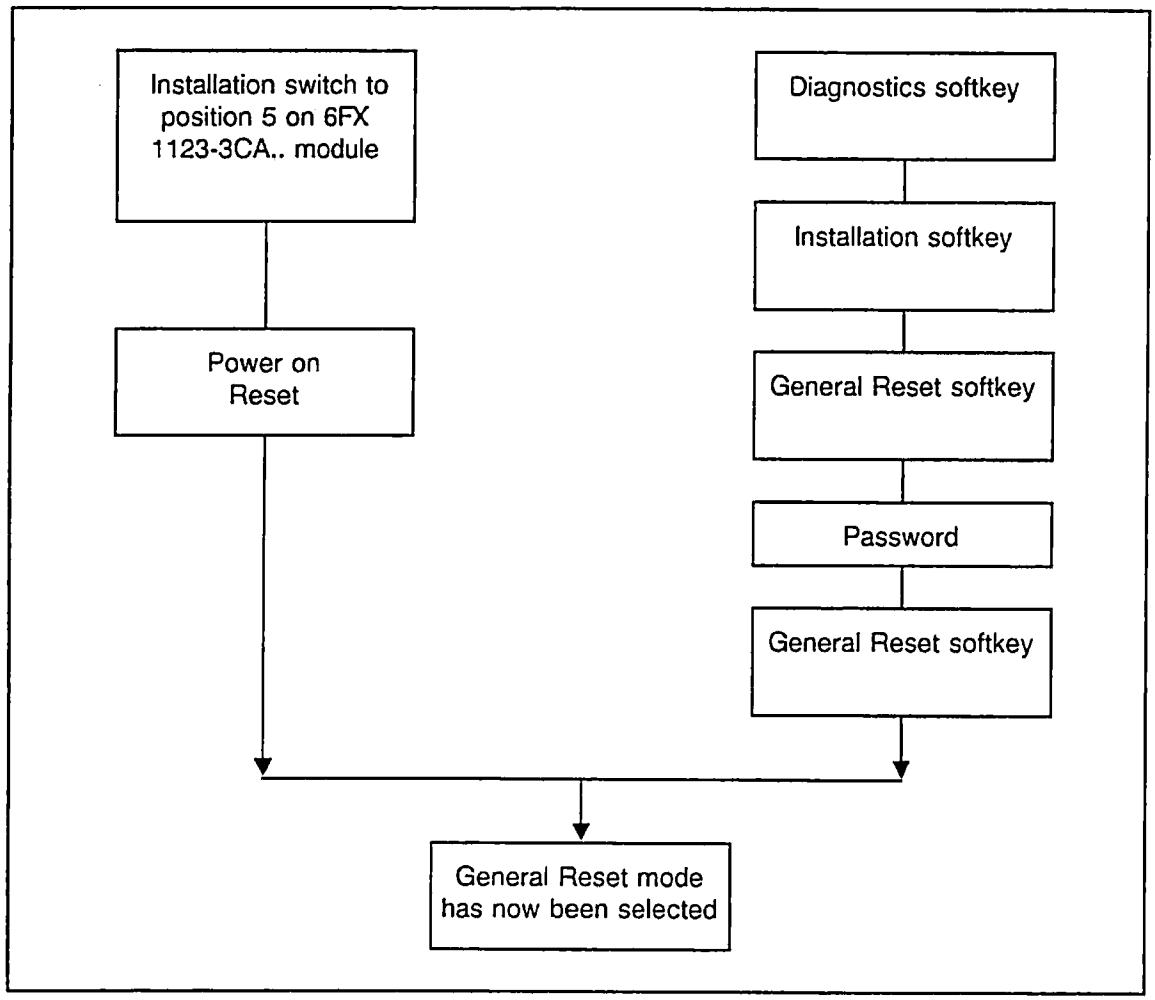

© Siemens AG 1990 All Rights Reserved 6ZB5 410-0EN02

11.3.3 Softkeys in general reset mode

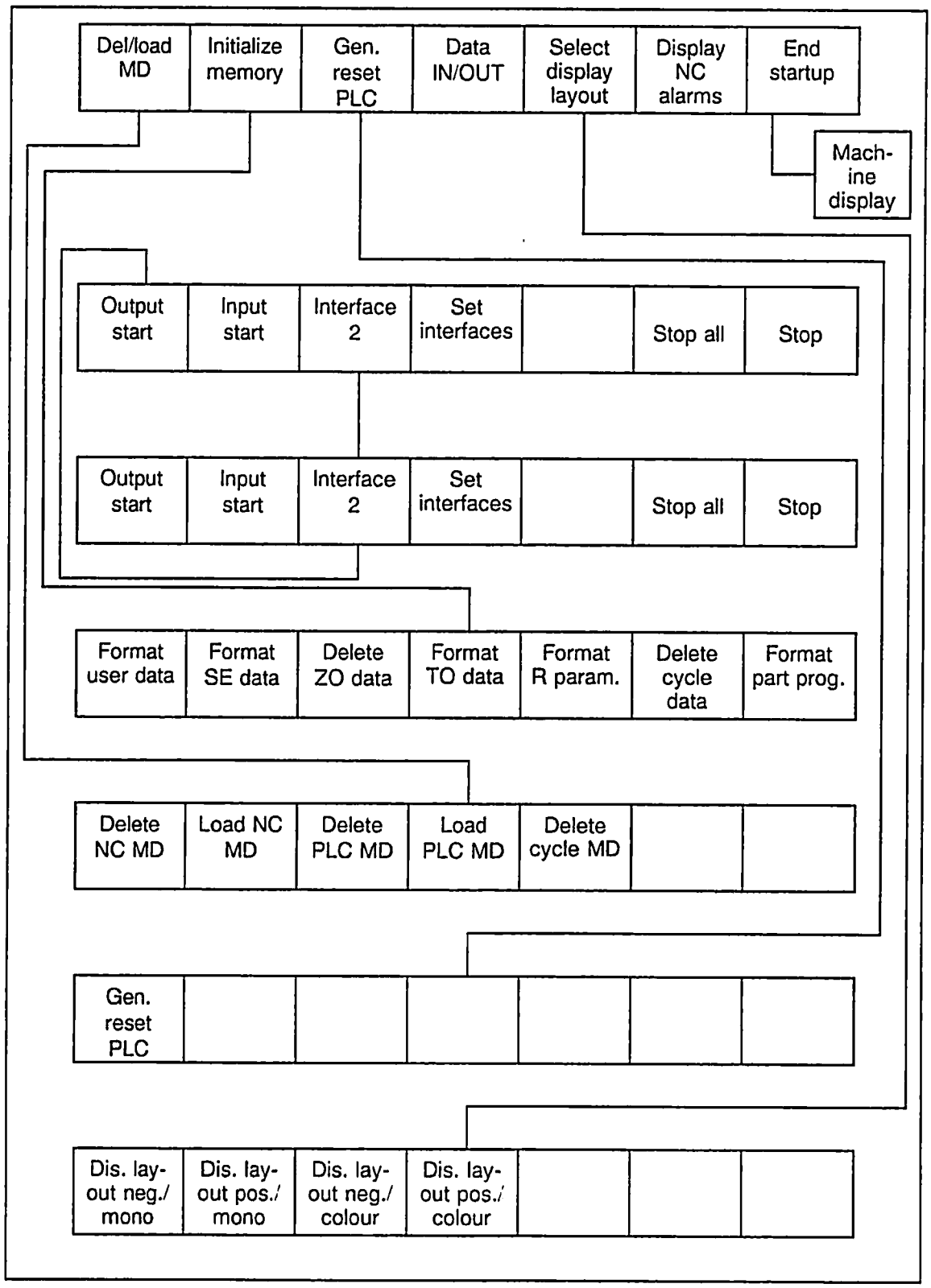

© Siemens AG 1990 All Rights Reserved 6ZB5 410-0EN02

11.3.4 Softkey descriptions

- Delete machine data (SK1, SK3, SK5)
  The NC, PLC and cycle MD are set to zero and the MD areas formatted.

- Load machine data (SK2, SK4)

- Format user data (SK1)
  A combination of softkey functions 2-6 (SK2 to SK6)

- Format SE data (SK2)
  The setting data are cleared to zero, formatted and initialized with their default values. The first RS232C (V.24) interface is initialized with values for the programmer.

- Delete ZO data (SK3)
  The zero offsets, coordinate rotating angles and preset offsets are cleared to zero.

- Delete TO data (SK4)
  The tool offsets are set to zero and formatted. Range modifications over NC MD 13 and 210 do not go into force until this softkey is actuated.

- Format R parameters (SK5)
  All R parameters (common and channel-specific) are reset to zero and formatted.

- Delete cycle data (SK6)
  The cycle setting data and MIB parameters are reset to zero and formatted. The MIB parameters are the machine input buffers for the standard cycles with program support.

- Format part program (SK7)
  Clears and formats the part program memory.

- General PLC reset, see Section 7

- Data IN/OUT (SK4)
  In General Reset mode, the NC data can be read in and out over the RS232C (V.24) interface. Also see the Operator's Guide.

- Select display layout (SK5)
  The softkeys (SK1-4) are used to select the basic setting for colour or monochrome monitor. The "negative" softkeys (SK1, SK3) set the monitor for light-on-dark, the "positive" softkeys (SK2 and SK4) for dark-on-light. Whenever NC MD data are deleted or loaded, the machine data for display layout (20000 to 20343) are set to the default values for monochrome/negative.

- End startup
  Deselects Routine mode and executes a PLC cold restart, thus activating the PLC MD. Power On routine for the NC software; the password is deleted.

© Siemens AG 1990 All Rights Reserved 6ZB5 410-0EN02

11.3.5 Deselecting general reset mode

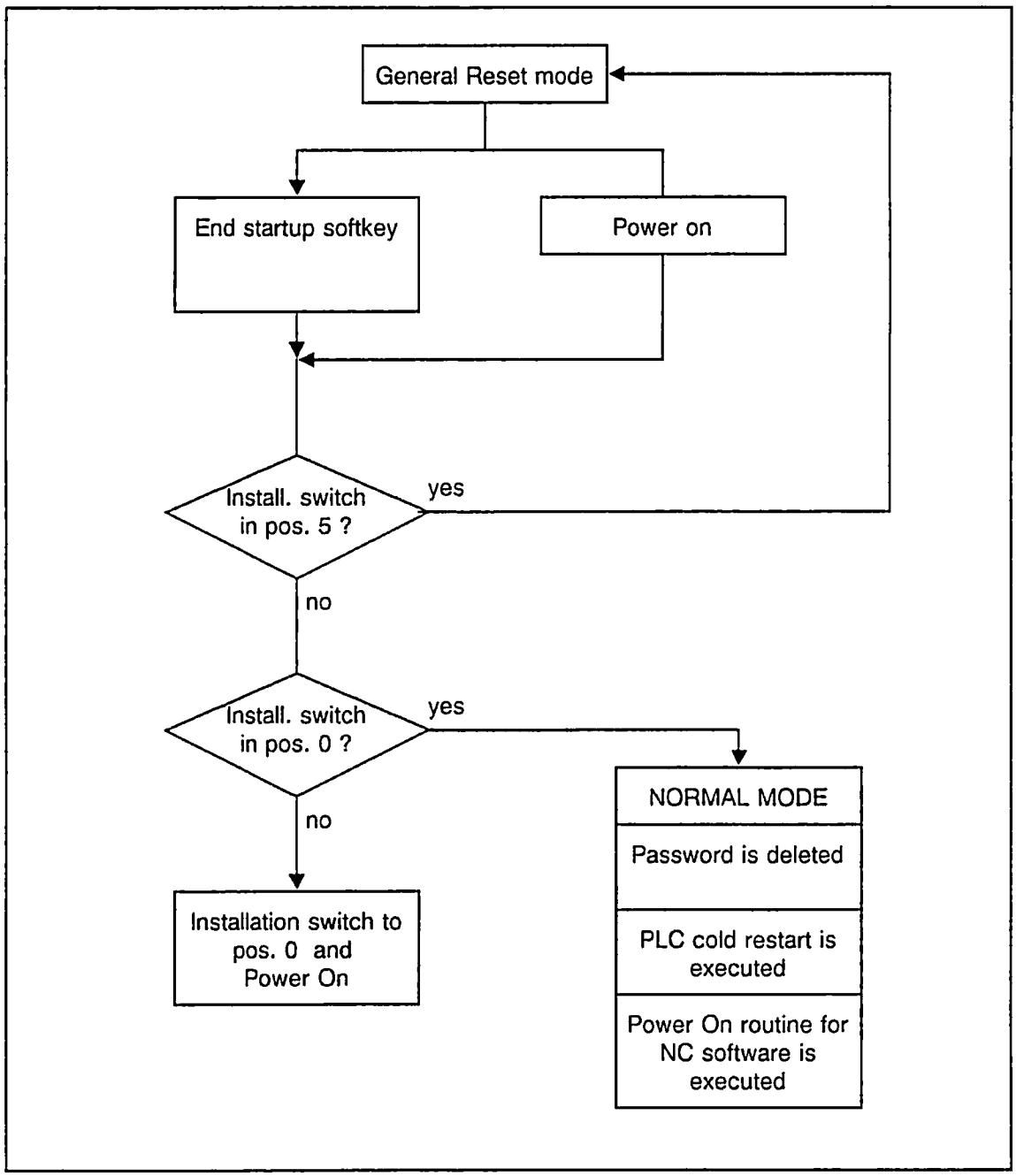

© Siemens AG 1990 All Rights Reserved 6ZB5 410-0EN02

12 Functional Descriptions

12.1 Leadscrew error compensation

12.1.1 Corresponding data

- NC MD 316* (Reference point pointer for + compensation)
- NC MD 320* (Reference point pointer for - compensation)
- NC MD 324* (Distance between 2 leadscrew error compensation points)
- NC MD 328* (Compensation value)
- NC MD 344* (Modulo value for rotary axis)
- NC MD 6000 to 6249 (Leadscrew error compensation points)
- Option H56

Note carefully!

Changes to NC MD data for leadscrew error compensation do not go into effect until after completion of POWER ON and reference point approach.

12.1.2 Functional description

The principle of "indirect measurement" in NC controlled machines assumes that the pitch of the leadscrew is constant at any point within the traversing range, thus allowing the actual axis position to be derived from the position of the drive spindle.

However, varying deviations result from manufacturing tolerances in the various spindle qualities. In addition, measuring system errors (although comparatively insignificant) and any other possible machine-dependent errors must also be taken into account.

The checksum error can be determined by plotting an error curve over the entire traversing range of the axis. The reference measuring system used must be a high-precision instrument, e.g. a laser interferometer. The dimensional deviation at the workpiece can be significantly reduced by means of compensating values which are input to the control at the time of installation.

The errors in each axis can be compensated separately. To this end, a total of 1000 compensation points (positions) are available for all axes. The compensation position spacing for each axis is selectable over a range of 1 to 32,000 units. It is possible to set a compensating value of 0 to 100 units which is identical for all positions on each axis.

© Siemens AG 1990 All Rights Reserved 6ZB5 410-0EN02

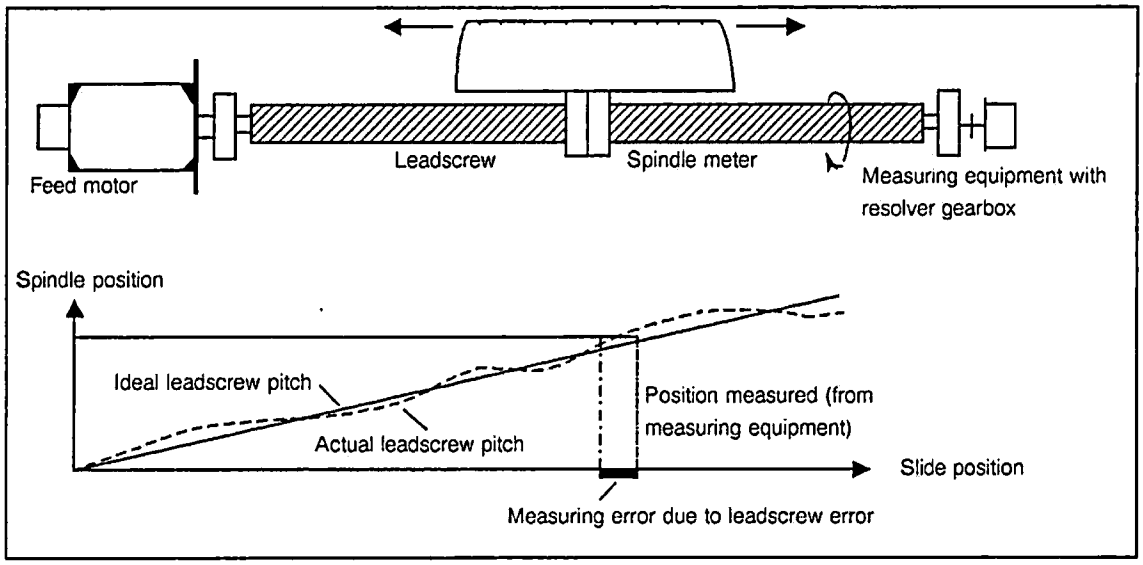

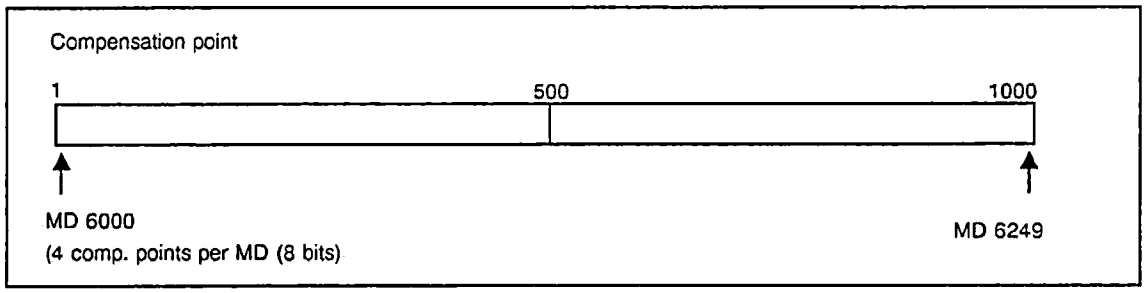

Measuring leadscrew error compensation

The reference point is first approached to synchronize the measuring system. This is then followed by travel to the negative range limit of the axis, commencing from this point to plot an error curve in the positive direction using an accurate instrument; the reference point must be identified.

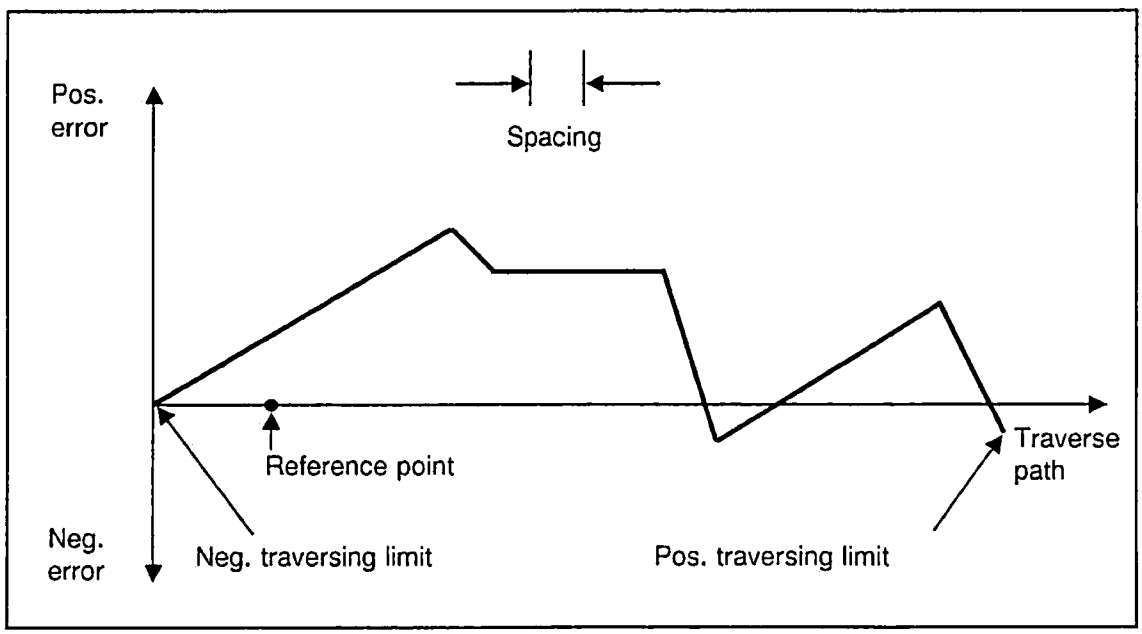

© Siemens AG 1990 All Rights Reserved 6ZB5 410-0EN02

Because compensation is not possible at the reference point, the error curve must be shifted so that the error is zero at the reference point.

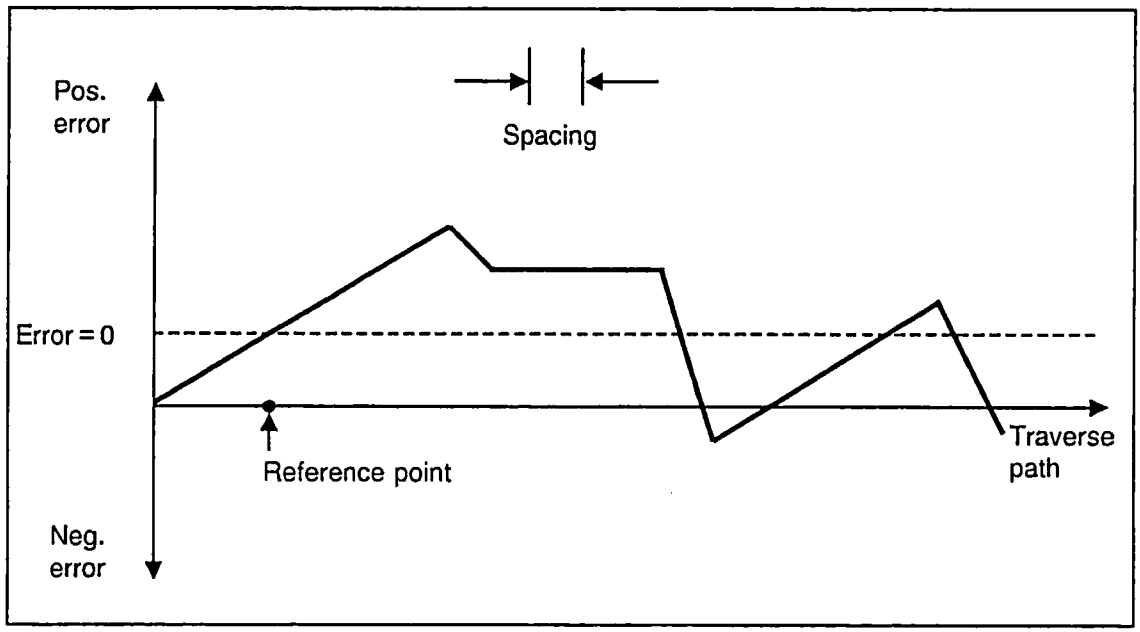

© Siemens AG 1990 All Rights Reserved 6ZB5 410-0EN02

The spacing between 2 leadscrew error compensation points (MD 324*) is then specified, being based on the permissible tolerance of the final (compensated) leadscrew error curve, the actual leadscrew pitch error and the number of possible compensating values.

The following method for determining the spacing between 2 leadscrew error compensation points may be used:
Δ S : Compensation amount, e.g. ≤ 1/2 tolerance band
Δ I: Spacing between 2 leadscrew error compensation points

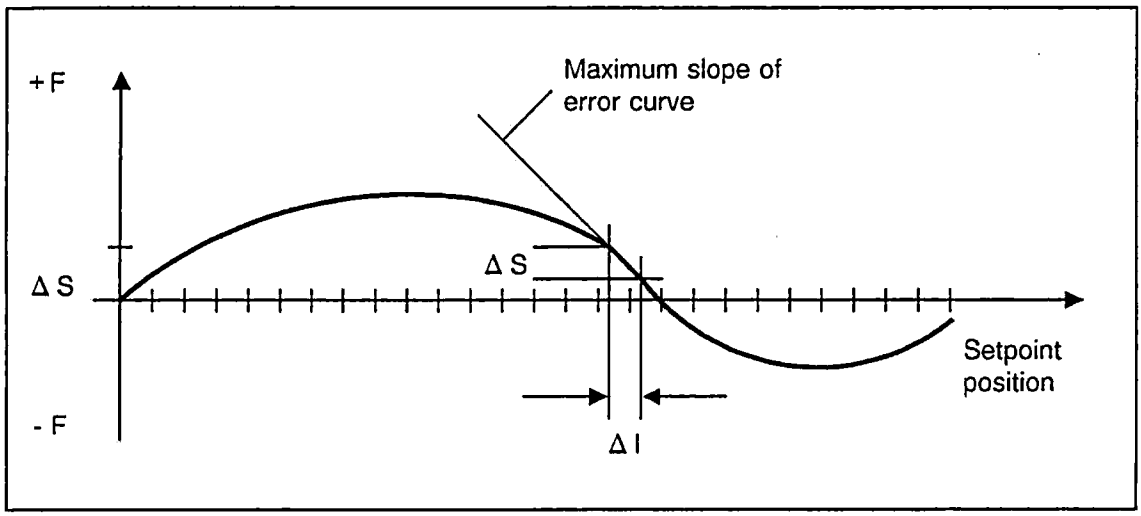

The point with the greatest pitch error is determined and the travel (Δ I) in which the specified amount (Δ S) is passed through is established.

Δ S : Compensation amount = MD 328*
Δ I: Spacing = MD 324*

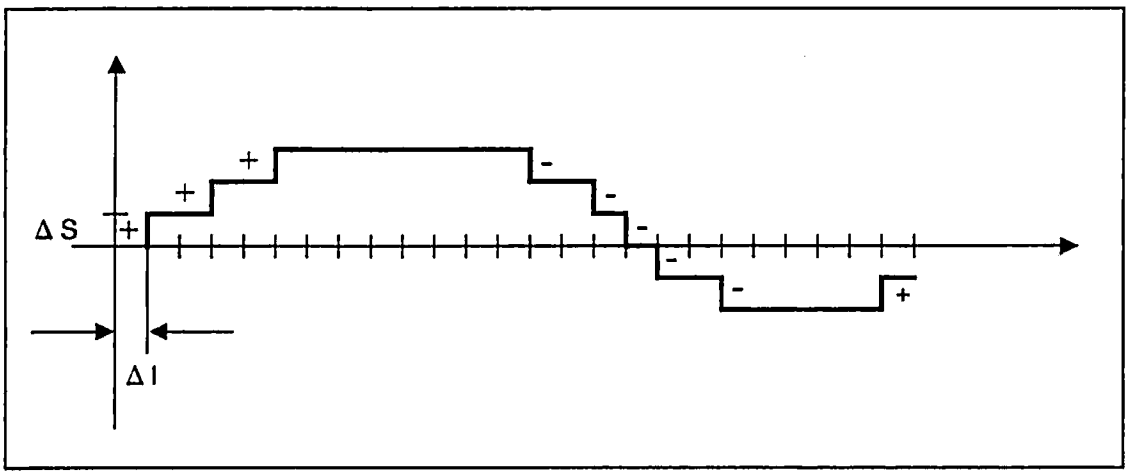

The relevant compensating values for the spacing is based on the permissible tolerance band, and should be selected so that the compensated error curve approximates as closely as possible the ideal condition. The compensating value (0 to 100 units) is transferred to NC MD 328*.

© Siemens AG 1990 All Rights Reserved 6ZB5 410-0EN02

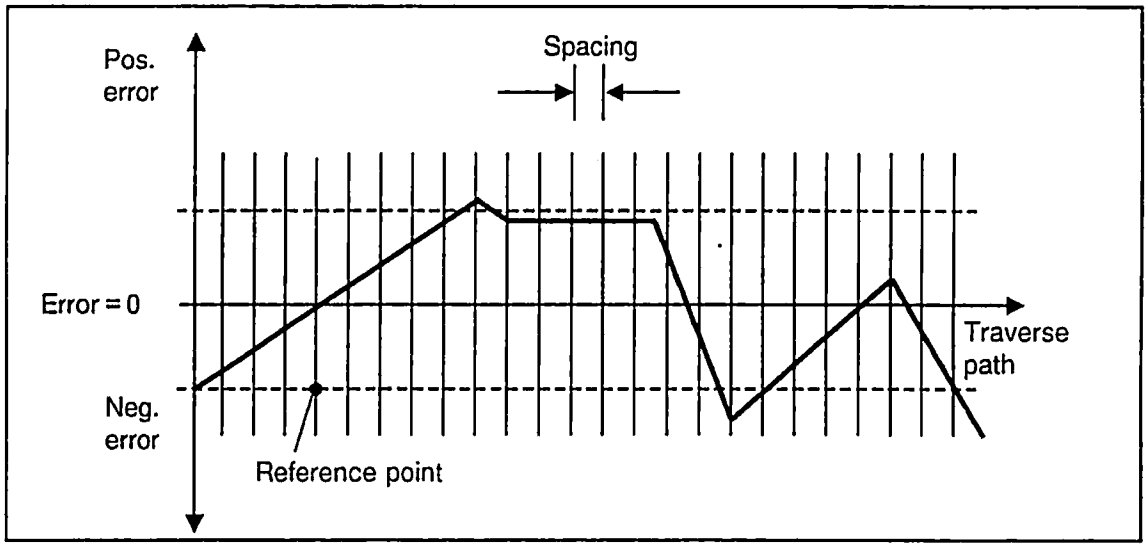

It is then specified how many compensating points must be supplied by means of the entered spacing between 2 leadscrew error compensation points and the end stops at the machine. Since leadscrew error compensation is only active when the axis is synchronized - at the reference point - particular significance is attached to the compensation point coinciding with the reference point. This compensation point is entered in encoded form in MD 316*. The compensating value at this point must be 0.

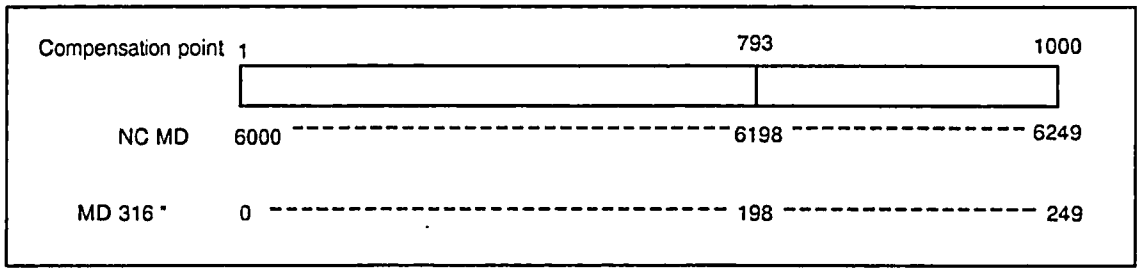

In view of the fact that the SINUMERIK 840 has a total of 1000 compensation points for all axes, the control must be informed via MD 316* as to which of these 1000 points corresponds to the axis reference point. The compensation point is not entered directly in MD 316*, the MD offset (MD 6125 = MD offset = 125) being entered instead, so the reference point can only be located on compensation points 1, 5, 9, 13, 17, ...

© Siemens AG 1990 All Rights Reserved 6ZB5 410-0EN02

MD No.	Bit No. 7	6	5	4	3	2	1	0
6000	Comp. point 4 Yes / No + / -		Comp. point 3 Yes / No + / -		Comp. point 2 Yes / No + / -		Comp. point 1 Yes / No + / -	
6001	Comp. point 8 Yes / No + / -		Comp. point 7 Yes / No + / -		Comp. point 6 Yes / No + / -		Comp. point 5 Yes / No + / -	
6002	Comp. point 12 Yes / No + / -		Comp. point 11 Yes / No + / -		Comp. point 10 Yes / No + / -		Comp. point 9 Yes / No + / -	
6248	Comp. point 996 Yes / No + / -		Comp. point 995 Yes / No + / -		Comp. point 994 Yes / No + / -		Comp. point 993 Yes / No + / -	
6249	Comp. point 1000 Yes / No + / -		Comp. point 999 Yes / No + / -		Comp. point 998 Yes / No + / -		Comp. point 997 Yes / No + / -	

\- = 0
\+ = 1
No = 0
Yes = 1

Since 4 compensation points are available for each machine data, it is specified in the control that only the point on the far righthand side (bits 0, 1) can be defined as the reference point.

Example

- Reference point is to lie on compensation point 793

$$\rightarrow \quad \text{MD offset} = \frac{793 - 1}{4} = 198$$

- MD offset 198 = MD 6198

→ Value in MD 316* ... 198

As stated above, the reference point determines the compensation point at which leadscrew error compensation is activated following reference point approach. No compensation is allowed at this compensation point!

© Siemens AG 1990 All Rights Reserved 6ZB5 410-0EN02

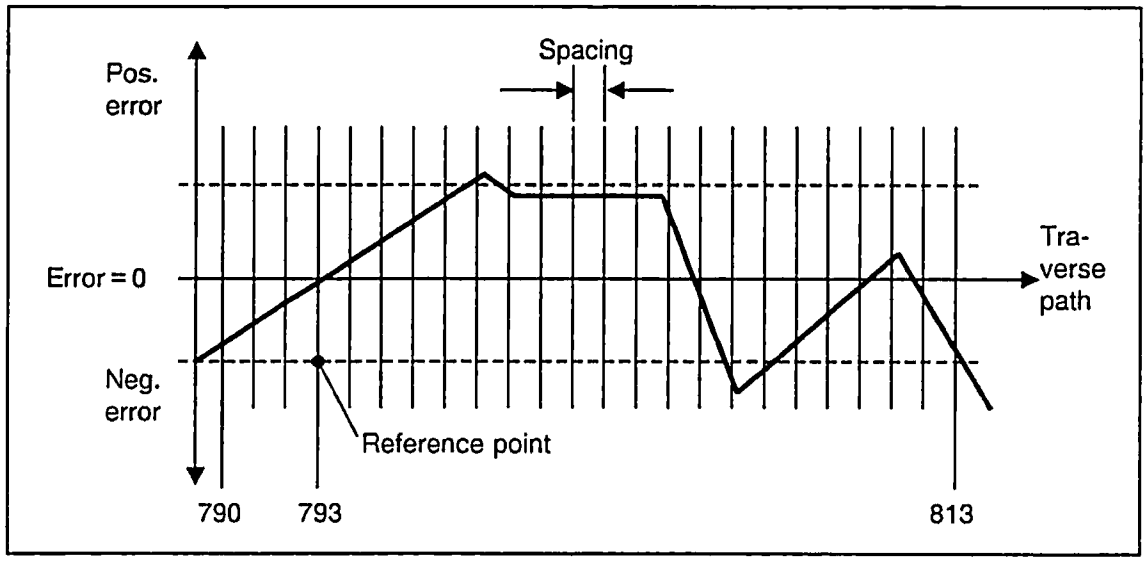

Example

Axis 1 shows the error curve; no compensation points have been used as yet.

Reference point value is 0
Max. - travel: - 35.000 mm
Max. + travel: + 205.00 mm

Tolerance band (prescribed by machine manufacturer), e.g. 0.01 mm
Spacing between two leadscrew error compensation points, e.g. 10 mm :

35 mm traverse path/max
A- → **3 compensation values**
10 mm grid spacing

205 mm traverse path/max +
A+ → **20 compensation values**
10 mm grid spacing

Total number of compensation values:

C = (A-) + (A+) + (Ref) = 3 + 20 + 1 → **24 compensation values**

The result is NC MD 3161 = 1 (NC MD 6001), i.e. compensation point K5 is the point that corresponds to the reference point; compensation at this point is not allowed. Compensation point K4 is used when travel goes 10 mm in a negative direction, and K6 when travel goes 10 mm in a positive direction.

© Siemens AG 1990 All Rights Reserved 6ZB5 410-0EN02

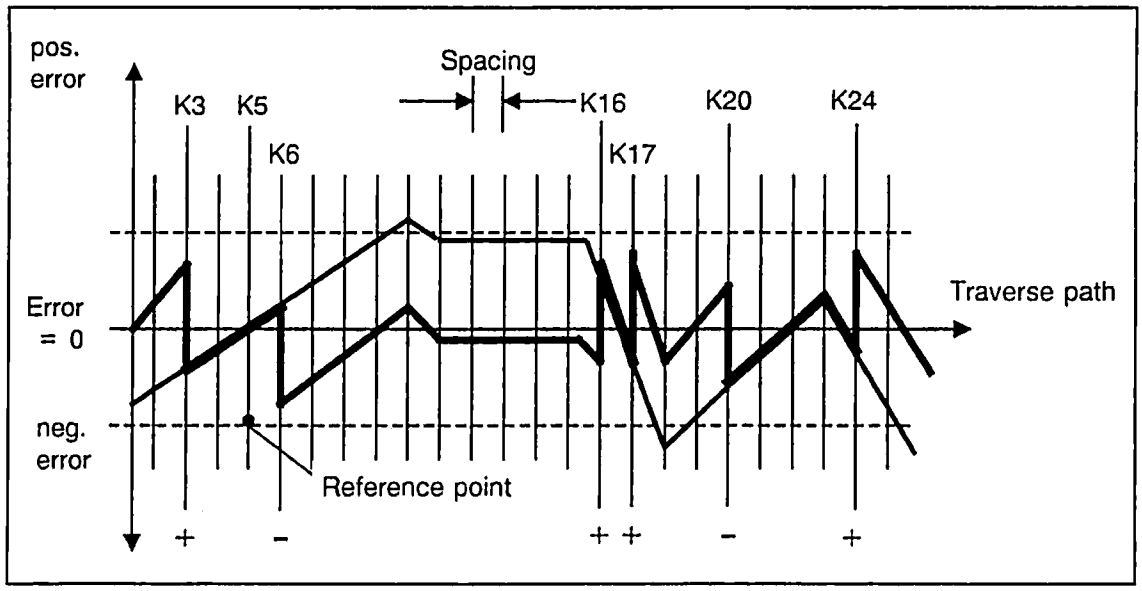

-------- Tolerance band e.g. 10 µm

━━━━━ Compensated curve
Compensation value e.g. 5 µm

Commencing at the reference point and proceeding in a negative direction, the error curve runs to the end of the traverse path within the tolerance band. No compensation is necessary. A better result is obtained through positive compensation at K3. To stick as closely as possible to 0 error, compensation in a positive direction of travel must be negative at K6, positive at K16 and K17, negative at K20, and positive again at K24.

The following machine data must be set:

- Option SSFK (leadscrew error compensation)
- NC MD 3161 = 1 (to define K5 as reference point)
- NC MD 3241 = 10000 (10 mm spacing)
- NC MD 3281 = 5 (compensation value 5 µm at a positive control resolution of 1/2 x 10^{-3} mm)
- NC MD 6000 = 00 11 00 00 (positive compensation at K3)
- NC MD 6001 = 00 00 10 00 (negative compensation at K6; bits 0 and 1 must be 0)
- NC MD 6002 = 0 no compensation
- NC MD 6003 = 0 no compensation
- NC MD 6004 = 00 00 11 11 (positive compensation at K16 and K17)
- NC MD 6005 = 00 00 10 00 (negative compensation at K20)
- NC MD 6006 = 00 00 11 00 (positive compensation at K24)

© Siemens AG 1990 All Rights Reserved 6ZB5 410-0EN02

If the reference point is assigned to compensation point 793, breakdown of the 1000 compensation points is as follows:

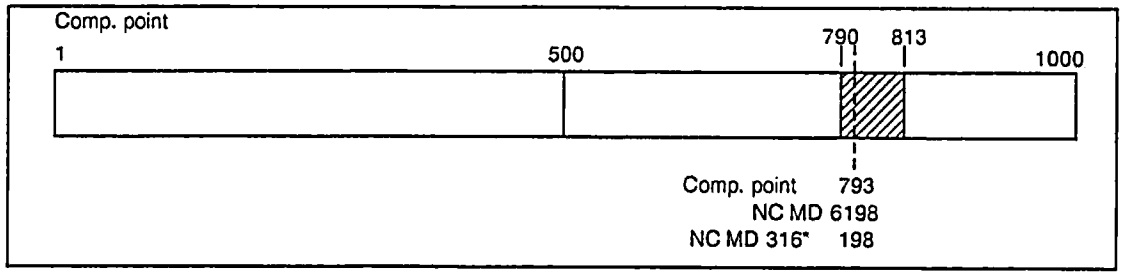

The reference point determines the location of the hatched area of the compensation points used. This area terminates at point 790 or 813 due to the spacing between the leadscrew error compensation points and the maximum traversing range of the axis.

If leadscrew error compensation is used for a number of axes, the commissioning engineer must ensure when entering the MD that the compensation points do not overlap, as no check is carried out in the control. However, the gaps between the axes may be of any size, provided the total range of 1000 compensation points is not exceeded.

In direction-dependent leadscrew error compensation, there is a second compensation curve plotted from the positive to the negative direction.

In the case of ball screws, pre-stressing of the screw nut yields an identical error curve, irrespective of the plot direction during measurement. When worm drives are involved, however, significant differences may arise between the positive and negative directions of travel. Consequently, an error curve must also be plotted in the negative direction and input as compensation value.

The procedure is similar to that for entering the positive compensating values, ensuring that the compensation ranges do not overlap between the positive and negative traversing movements and between the axes. Since the reference point again determines with this compensation curve where the compensation points lie within the 1000 points, the reference point must be entered in NC MD 320* in encoded form (MD offset).

Example

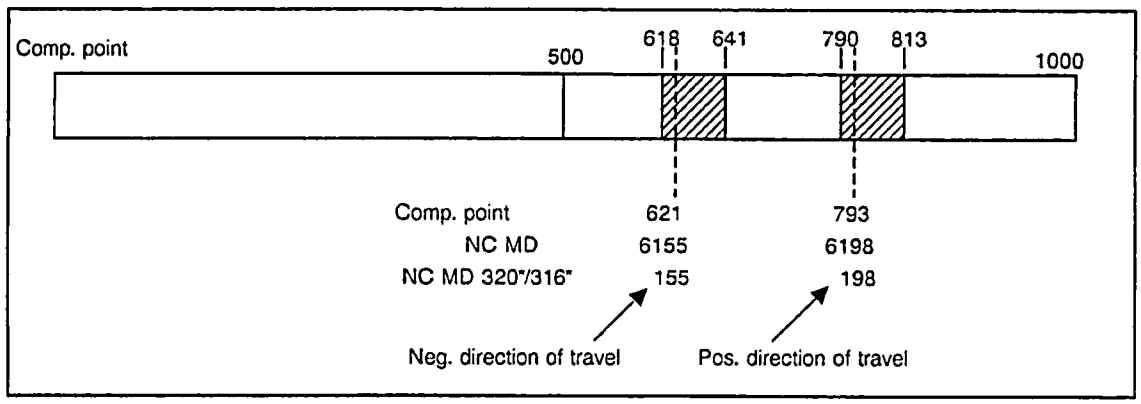

Both direction-dependent and direction-independent leadscrew error compensation are options, and must therefore be ordered separately (H 56).MD modifications do not go into force until after POWER ON and reference point approach. Because the compensating value at the compensation point must be processed as quickly as possible, the specified acceleration value (NC MD 276*) is not applicable in this case.

© Siemens AG 1990 All Rights Reserved 6ZB5 410-0EN02

12.2 Rotary axis function

12.2.1 Corresponding data

Same data as for linear axes, plus the following additional or supplementary data:

- NC MD 344* (Rotary axis modulo value for leadscrew error compensation)
- NC MD 560* bit 7 (Actual-value display modulo 360°)
- ND MD 560* bit 3 (Rounding for rotary axes)
- NC MD 560* bit 2 (Rounding to whole/half degree)
- NC MD 564* bit 5 (Position control for rotary axis)
- NC MD 572* bit (Programming of rotary axis modulo 360°)
- NC MD 5002 (Input resolution)
- NC MD 1800* (Display resolution)
- NC MD 1800* (Position control resolution)
- Alarm 100* (Invalid grid spacing for leadscrew error compensation)
- Alarm 2064 (Rotary axis programming error)

12.2.2 Functional description

Different demands are made on a rotary axis, depending on the type of machine involved. The rotary axis function is therefore subdivided into three subfunctions. These subfunctions are activated either over the machine data or the program. The control can be adapted to the various machine types by combining subfunctions.

"Rotary axis": NC MD 564* Bit 5

NC MD 564*, bit 5, declares the axis to be a rotary axis. The display is absolute (1 rev. 360°, 2 revs 720°, etc.), as are the @ functions. However, the axis is programmed as through it were a linear axis. The units of the axis-specific NC MD are treated differently.
Unit → 10^{-3} degrees for position control resolution 1/2 x 10^{-3} units and input resolution 10^{-3} units.

Actual-value display "modulo 360°": NC MD 560* Bit 7

When this bit is set, the display is modulo, i.e. it is reset to 0 after 359.999 degrees. The axis is programmed like a linear axis.

"Modulo programming": NC MD 572* Bit 2

Programming of the rotary axis may be absolute (G90) up to max. 360 degrees. The programmed sign defines the direction of travel. Following a program start after a block search, and with G68, the programmed position is always approached over the shortest path.

G68 is modal and belongs to the G90/91 group. If "modulo programming" is not activated, G68 is treated like G90.

If the rotary axis is not to traverse over the shortest path, it must be programmed with G90 and a sign.

© Siemens AG 1990 All Rights Reserved 6ZB5 410-0EN02

Example: Axis is at 270 degrees

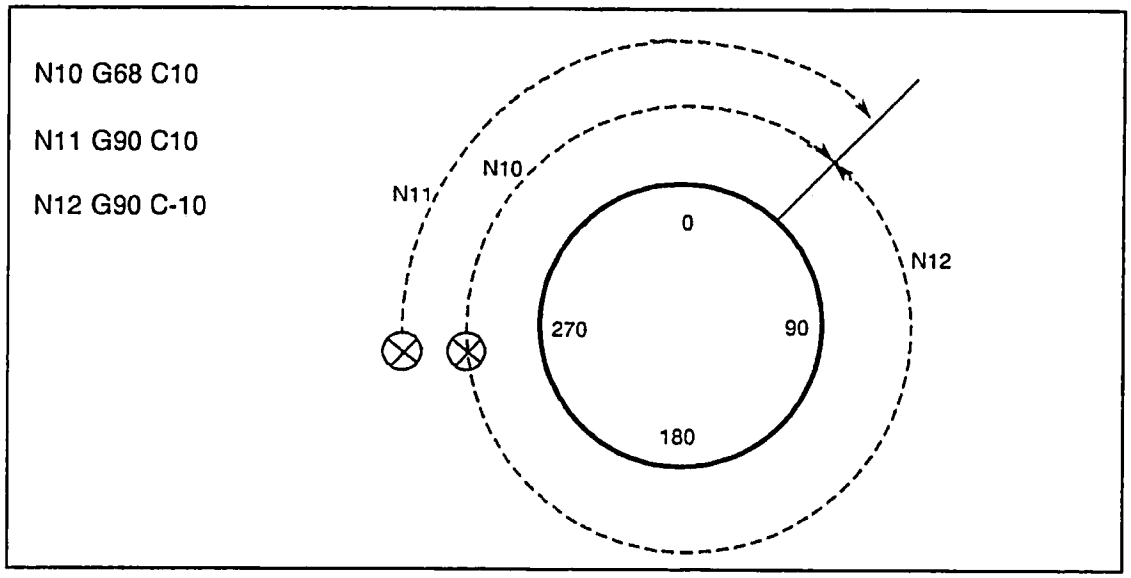

The machine data "Modulo 360°" and "Modulo programming" are permissible only in conjunction with machine data "Rotary axis".

Subfunction combinations

Rotary axis	Modulo prog.	Modulo 360°	Comments
564* Bit 5	572* Bit 2	560* Bit 7	MD
0	0	0	Linear axis
1 1 1	0 0 1	0 1 1	Use permitted
1 0 0 0	1 0 1 1	0 1 1 0	Use illegal

© Siemens AG 1990 All Rights Reserved 6ZB5 410-0EN02

Axis-specific machine data

If an axis is defined as rotary axis (NC MD 564, bit 5), the following applies in dependence on NC MD (input resolution and position control resolution):

a) 1 unit = 2 units of position control resolution (reference system MS)
e.g. 1 unit of position control resolution = 0.5 x 10^{-3} degrees
(NC MD 1800* = xxxxx 0101)
→ 1 unit = 10^{-3} degrees
b) 1 unit = 1 unit of input resolution (reference system IS)
e.g. 1 unit of input resolution = 10^{-3} degrees (NC MD 5002 = x0100 xxxx)
→ 1 unit = 10^{-3} degrees

All axis-specific machine data is specified in degrees for a rotary axis, e.g. max. speed of a rotary axis = 15 revs/min
→ 15 revs/min x 360 degrees/rev = 5400 degrees/min
→ Entry in NC MD 280* = 5400 (1000 degrees/min)

For combinations of the various types of resolution and a list of values, refer to Section 5.6.

12.3 Warm restart

12.3.1 Corresponding data

- NC MD 360* (Axis valid in BAG)
- NC MD 316* (Pointer for leadscrew error comp.)
- NC MD 320* (Pointer for leadscrew error comp.)
- NC MD 453* (Spindle valid in BAG)
- NC MD 876 to 899 (Coupled axis groupings)
- NC MD 5156 to 5183 (Coupled motion combinations)
- NC MD 5060 to 5139 (Transformation data blocks)
- Signal DB 48 DL 0 bit 0 (Initiate warm restart)
- Signal DB 48 DR 1 bit 0 (Terminate warm restart)
- Alarm nos. 70 to 80

12.3.2 Functional description

On some machines, it is necessary to assign arbitrary axes to a different mode group without having to shut down the control, which would result in loss of the reference point.

Example

A machine has two working areas:
Area I with axis B'
Area II with axes B1'.

To ensure effectivity, the working areas are subdivided into different mode groups. The three main axes (X, Y and Z) are assigned separately to working area I (mode group 1) or working area II (mode group 2) over a warm restart. This necessitates use of a separate machine control panel for each working area; main axes X, Y and Z are allocated to each control panel.

The machine data can also be modified with @ functions by invoking a PLC cycle in a free channel. A warm restart is required to modify the machine data listed in 12.3.1.

© Siemens AG 1990 All Rights Reserved 6ZB5 410-0EN02

When working area I is in use, the three main axes (X, Y and Z), axis B', and the spindle are allocated to machine control panel 1 and mode group 1.
Axes B1' can be traversed in JOG mode in working area II to load and unload a workpiece.

If the working areas are to be reversed, i.e. if working area II is to be used to machine a workpiece and working area I for loading and unloading, the axis assignments must be changed, i.e. there must be a switch to another mode group. When this switch takes place, the axes are reassigned to the machine control panels.

An auxiliary function is assigned to each working area to help switch mode groups. The relevant auxiliary function provides the information which the PLC needs to reassign the axes and to make any necessary changes in the machine data. Once the machine data has been modified, a warm restart (DB48, DL0, bit 0) must be initiated over the PLC interface. The "warm restart" function reconfigures the control without necessitating subsequent reapproaching of the reference points.

No warm restart is required following modification of the following MD:

- 104* TO area number (modification goes into force at once)
- 304* IPO parameter name (modification accepted after each NC block)
- 548* Name of horizontal axis (")
- 550* Name of perpendicular axis (")
- 552* Name of vertical axis (")
- 554* Axis with constant cutting speed (")
- 576* Axis not permitted in channel (")

A warm restart is possible only when all channels are in the RESET state, i.e. the PLC must bring all channels to the RESET state, coupled motion and transformation must be deselected, and all spindles must be brought to a standstill (when M19 is active) before the warm restart is initiated.

The RESET state must be maintained in all NC channels while a warm restart is in progress.

The number of axes cannot be altered while the warm restart function is being executed. This is only possible with POWER ON RESET.

During a warm restart, the axial, spindle-specific interface and the EMERGENCY STOP signal on the NC → PLC and PLC → NC interfaces are not processed (control is in RESET state).

Functional sequence of a warm restart

1. NC
   - Data are written to NC MD 360* with the aid of CP 800 commands (can also be implemented via PLC).
   - Auxiliary function for warm restart request is output, e.g. H1234.
2. PLC
   - Auxiliary function is interpreted
   - The PLC writes to NC MD 360* (also possible over (NC)
   - Reset over PLC for all channels
3. NC
   - ***All*** part programs are aborted (channels 1 to 16)
4. PLC
   - User sets interface: "Warm restart" →1 (DB 48 DL0 bit 0)
5. NC
   - Sets interface signal "Warm restart terminated" → 1 (DB 48 DR2 bit 0)
6. PLC
   - User resets interface: "Warm restart" → 0
7. NC
   - Resets interface "Warm restart terminated" → 0
8. The warm restart has been completed and program execution may be resumed.

© Siemens AG 1990 All Rights Reserved 6ZB5 410-0EN02

Errors

If incorrect machine data are encountered during a warm restart, the NC issues alarms 70 to 80. The acknowledgement signal "Warm restart terminated" is set. Once the machine data that caused the error have been corrected, the alarm can be reset only by switching the control off and then on again (POWER ON).

12.4 Coordinate transformation

Coordinate transformation TRANSMIT (implemented from software version 1 onwards) is used for face milling of turned parts (lathes). In order to implement this, a C axis and a powered milling cutter are required in addition to the X and Z axes.

2D/3D coordinate transformation (implemented from software version 2) is required when surfaces are configured on a plane (2D coordinate transformation) or in space (3D coordinate transformation) in such a way that they can only be machined by the (real) axes by including rotations (the tool being positioned as normal on the plane to be machined).

12.4.1 Corresponding data

Transformation data record for 1st transformation

- NC MD 730 1st transformation, parameter 1
  NC MD 731 1st transformation, parameter 2
  NC MD 732 1st transformation, parameter 3
  NC MD 733 1st transformation, parameter 4
  NC MD 734 1st transformation, parameter 5
  NC MD 735 1st transformation, parameter 6
  NC MD 736 1st transformation, parameter 7
  NC MD 737 1st transformation, parameter 8
  NC MD 738 1st transformation, parameter 9
  NC MD 739 1st transformation, parameter 10
- NC MD 740 to 809 2nd to 8th transformation, parameter 1 to 10
- NC MD 5060 channel numbers of the transformation
  NC MD 5061 G function for transformation selection
  NC MD 5062 axis name 1st fictitious axis
  NC MD 5063 axis name 2nd fictitious axis
  NC MD 5064 axis name 3rd fictitious axis
  NC MD 5065 axis name 1st real axis
  NC MD 5066 axis name 2nd real axis
  NC MD 5067 axis name 3rd real axis
  NC MD 5068 axis name 4th real axis
  NC MD 5069 axis name 5th real axis
  NC MD 5070 to 5139 1st to 8th transformation data set
- NC MD 540* Bit 7 transformation cancellation
- NC MD 564* Bit 6 fictitious axis
- OPTION transformation TRANSMIT/2D/3D coordinate transformation
- SIGNAL DB10-DB13 DR13 BIT 7 TRANSFORMATION ACTIVE
- Alarm 2043 Programming error during transformation
- Alarm 2189 Transformation undefined
- Alarm 2190 Transformation axes assigned
- Alarm 3086 Illegal transformation selection
- Alarm 3087 Error in transformation data

© Siemens AG 1990 All Rights Reserved 6ZB5 410-0EN02

12.4.2 Functional description of coordinate transformation

Whereas machine movements are executed in the real machine coordinate system, programming is carried out in the ficticious (Cartesian) coordinate system. Fictitious axes must be defined especially for the fictitious coordinate system. A fictitious axis can only be traversed when transformation is selected. Fictitious axes can be selected freely with respect to their axis name and their location. Up to eight transformations with varying axis groupings can be defined in any one control. The definition consists of a transformation data set and the associated parameters for each transformation.

The selection of the coordinate transformation is realized via G functions in the part program or via the command channel from the PLC.

The following G functions are defined:

G131, G231, G331 coordinate transformation TRANSMIT
G133, G233, G333 2D coordinate transformation
G135, G235, G335 3D coordinate transformation

Coordinate transformation can be cancelled via G130, G230 or G330 in part program, or via the command channel from the PLC.

It can be specified via NC MD 540" bit 7 whether cancellation occurs automatically on RESET of after a change in the operating mode.

See Section 12.4.8.1 for applications of the coordination transformation TRANSMIT.

2D coordinate transformation - see Section . 12.4.8.2

3D coordinate transformation - see Section 12.4.8.3

and in the Programming Guide to System 840.

Note:

- When TRANSMIT is implemented, the programmed path velocity is reduced to a level where the maximum speed of rotation of the rotary axis is not exceeded. This applies especially to movements near the turning centre.

  The speed is also reduced in rapid traverse if the rotary axis is not involved in the movement.

- In the case of JOG mode, the feedrate reduction will only have a partial effect as the end point of the movement is not known. This can lead to drops in the feedrate.

- The use of angle head cutters is restricted in TRANSMIT mode, block search with calculation triggers an alarm.

© Siemens AG 1990 All Rights Reserved

12.4.3 The transformation data set

NC MD	Bit No. 7	6	5	4	3	2	1	0
5060	Channel number of transformation							
5061	G function for transformation selection							
5062	Axis name 1st fictitious axis							
5063	Axis name 2nd fictitious axis							
5064	Axis name 3rd fictitious axis							
5065	Axis name 1st real axis							
5066	Axis name 2nd real axis							
5067	Axis name 3rd real axis							
5068	Axis name 4th real axis							
5069	Axis name 5th real axis							

NC MD 5060 to 5069 1st transformation data set
NC MD 5070 to 5079 2nd transformation data set
:
NC MD 5130 to 5139 8th transformation data set

© Siemens AG 1990 All Rights Reserved

Conditions for a transformation data set

a) All axes and the channel must be assigned to the same operating mode group.
b) The transformation option must be available.
c) The transformation data are taken over internally by the control at restart (warm restart). Definition errors cause Alarm 3087 to be output . The incorrect machine data is coded in the block number in the alarm text.
d) NC MD 564* Bit 6 must be set for all fictitious axes.
e) The axis names of the real and fictitious axes of a transformation data set should not be repeated. Using the same axis name with a different extended address is permitted.

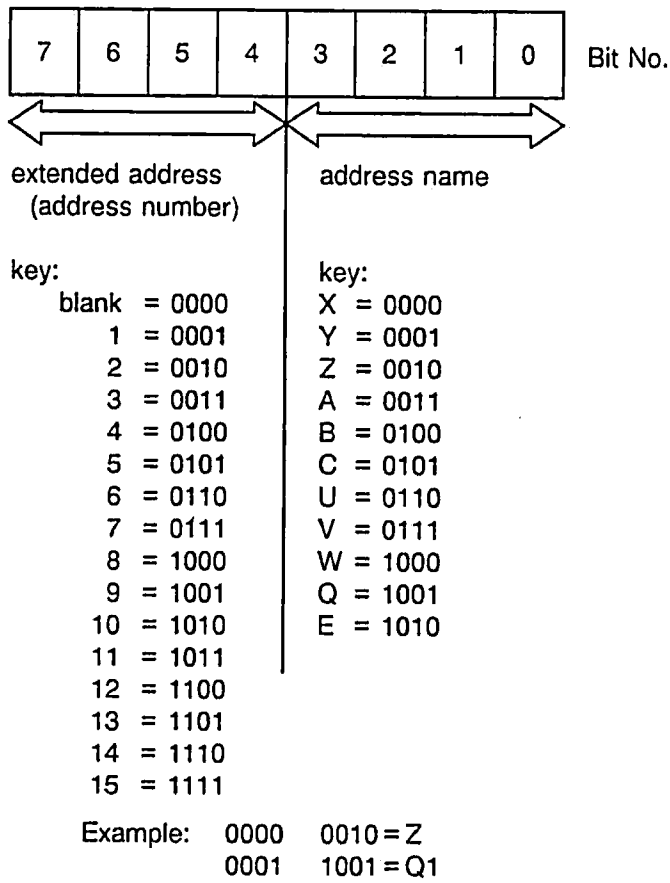

Legal names for axes, angles, chamfer and radius

A	*unassigned address*	**N**	sub block
B	*unassigned address*	**O**	danger of confusion with 0 (zero)
C	*unassigned address*	**P**	subroutine - number of passes
D	tool offset number	**Q**	*unassigned address*
E	*unassigned address*	**R**	calculation parameter
F	feed	**S**	spindle speed, S function
G	G function	**T**	tool
H	H function	**U**	*unassigned address*
I	interpolation parameter	**V**	*unassigned address*
J	interpolation parameter	**W**	*unassigned address*
K	interpolation parameter	**X**	*unassigned address*
L	subroutine	**Y**	*unassigned address*
M	M function	**Z**	*unassigned address*

© Siemens AG 1990 All Rights Reserved

12.4.4 Transformation parameters

NC MD	Significance
730	**1st transformation, parameter 1 (from SW version 4 onwards)**
731	**1st transformation, parameter 2 (from SW version 4 onwards)**
732	**1st transformation, parameter 3 (from SW version 4 onwards)**
733	**1st transformation, parameter 4 (from SW version 4 onwards)**
734	**1st transformation, parameter 5 (from SW version 4 onwards)**
735	**1st transformation, parameter 6 (from SW version 4 onwards)**
736	**1st transformation, parameter 7 (from SW version 4 onwards)**
737	**1st transformation, parameter 8 (from SW version 4 onwards)**
738	**1st transformation, parameter 9 (from SW version 4 onwards)**
739	**1st transformation, parameter 10 (from SW version 4 onwards)**

Sign	Input limits	Standard value	Units
+/-	99 999 999	0	units (IS)

NC MD 740 to 749 2nd transformation, parameter 1 to 10
NC MD 750 to 759 3rd transformation, parameter 1 to 10
NC MD 760 to 769 4th transformation, parameter 1 to 10
NC MD 770 to 779 5th transformation, parameter 1 to 10
NC MD 780 to 789 6th transformation, parameter 1 to 10
NC MD 790 to 799 7th transformation, parameter 1 to 10
NC MD 800 to 809 8th transformation, parameter 1 to 10

The transformation parameters are needed for the 2D/3D coordinate transformation (and are of no consequence for the TRANSMIT coordinate transformation).

Transformation parameters for 2D coordinate transformation

Parameter 1: ΔX shift of the real system in direction X relative to the fictitious origin a 1 [unit: units (IS)].
Parameter 2: ΔY shift of the real system in direction Y relative to the fictitious origin a 2 [unit: units (IS)].
Parameter 4: Angle of rotation ϕ of the real system relative to the fictitious system [unit: 10^{-5} degrees].
Parameter 10: Axis number which is used to calculate the G96 (constant cutting speed).

© Siemens AG 1990 All Rights Reserved

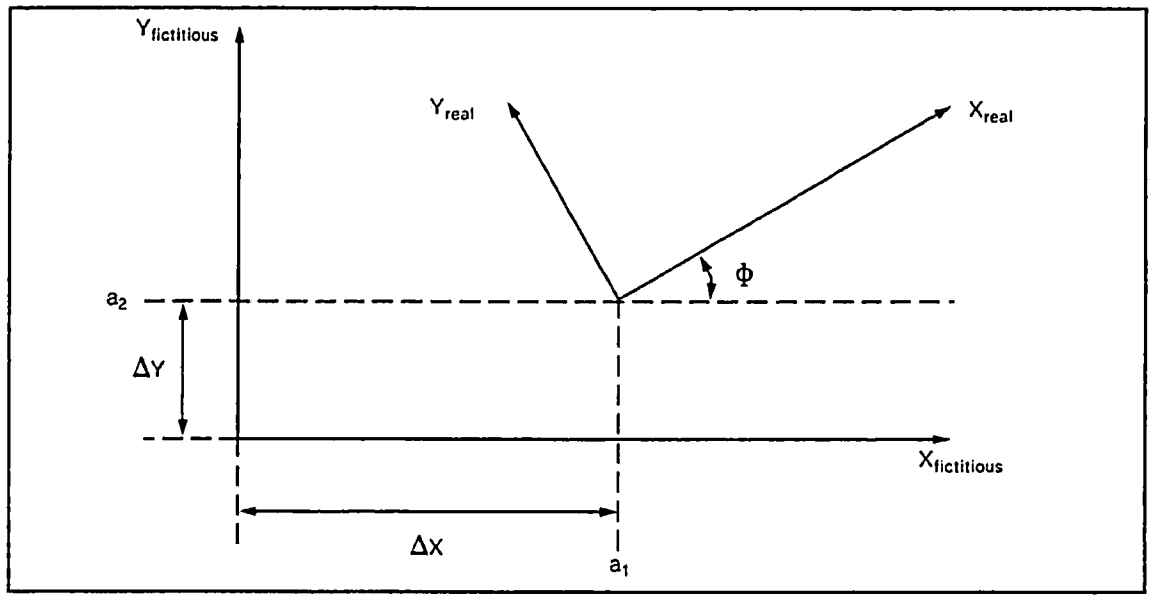

Transformation parameters for 3D coordinate transformation

Parameter 1:	ΔX shift of the real system in direction X relative to the fictitious system [unit: units (IS)].
Parameter 2:	ΔY shift of the real system in direction Y relative to the fictitious system [unit: units (IS)].
Parameter 3:	ΔZ shift of the real system in direction Z relative to the fictitious system [unit: units (IS)].
Parameter 4:	Angle of rotation ϕ, which occurs when the real coordinate system is rotated about the X axis (unit: 10^{-5} degrees].
Parameter 5:	Angle of rotation Ψ, which occurs when the real coordinate system is rotated about the Y axis (unit: 10^{-5} degrees].
Parameter 6:	Angle of rotation X, which occurs when the real coordinate system is rotated about the Z axis (unit: 10^{-5} degrees].
Parameter 10:	Axis number for axis which is used to calculate G96 (constant cutting speed).

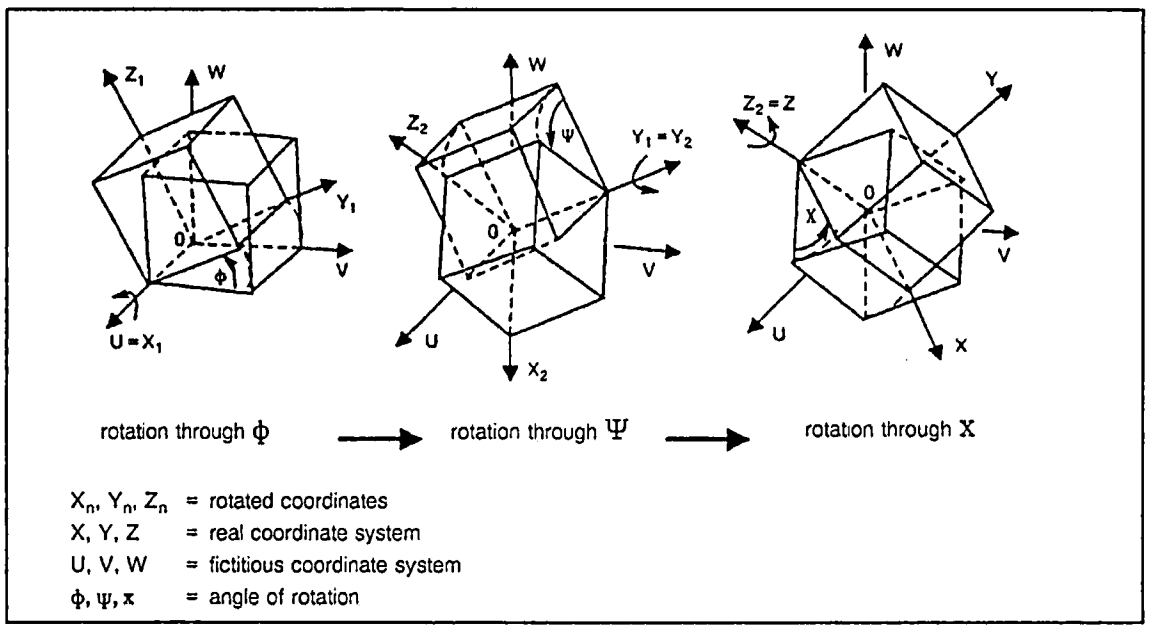

© Siemens AG 1990 All Rights Reserved 6ZB5 410-0EN02

12.4.5 Machine data for fictitious axes

MD 224*		Software limit switch
MD 228*		Software limit switch
MD 232*		Software limit switch
MD 236*		Software limit switch The software limit switch need not be input if the fictitious working area is outside the real possible working area, as the control always restricts the fictitious software limit switch to the limit switch of the A_{1R} axis (linear axis of transformation).
MD 276*		Acceleration The acceleration value must be calculated in such a way that the real axes of transformation are not overloaded (minimum acceleration value of A_{1R} to A_{5R}).
MD 280*		Maximum speed
MD 288*		JOG speed
MD 292*		Rapid JOG The speeds can be freely selected, as they are monitored by the control.
MD 304*		IPO parameter
MD 360*		Operating mode group of the axis
MD 564*	Bit 6	Fictitious axes The axis is declared as a "fictitious axis". Fictitious axes have no position control. The MD 200* measuring circuit assignment is therefore meaningless.
MD 564*	Bit 7	Axis exists
MD 568*		Encoding of the axis name
MD 576*		Axis not permitted in channel

© Siemens AG 1990 All Rights Reserved

12.4.6 NC PLC interface signals

- In the case of fictitious axes, only the signals "JOG, rapid overlay and handwheel 1,2 and the input interface" are processed.
  The output interface is neglected. The signal "Reference point reached" is permanently set to 1.

- The program including the transformation is not stopped if the signal "Axis disable" is set for a real axis in the transformation grouping. In this way an offset occurs between the transformation and the position control and it can be eliminated only by selecting transformation.

- If a real axis in the transformation grouping is switched into closed-loop control from the follow-up mode, a reverse transformation of the fictitious coordinates occurs automatically.

- If "Feed hold" is applied to a real axis in the transformation grouping, this applies to the entire grouping.

- When "Delete distance-to-go" occurs, the fictitious distances-to-go are cleared.

- The signal "Transformation active" is set in the channel-specific interface NC → PLC for every channel in which the transformation is active (see also Interface Description).

- Warm restart is possible when transformation is selected if the transformation grouping does not change the operating mode group.

- Command channel
  In order to traverse a fictitious axis in JOG mode, the relevant transformation must first be activated in the channel assigned via machine data. The activation, i.e. the selection/deselection, of the transformation is a function mode of the command channel. Selection of coordinate transformation from the command channel is described in the Interface Description, Part 1.

© Siemens AG 1990 All Rights Reserved

12.4.7 Explanation of the programming and operation of coordinate transformation

- Fictitious axes must not be programmed in the reset position (G130, G230, G330) → Alarm 2043.

- A transformation may only be activated from the reset position, i.e. transition to a different transformation is only possible via a previous deselection block.

- Coordinate transformation is selected with:
  G131 or G231 or G331 TRANSMIT
  G133 or G233 or G333 2D coordinate transformation
  G135 or G235 or G335 3D coordinate transformation

  The selection block must not contain any traversing movements, auxiliary functions etc.

- When transformation is selected, none of the real axes in the transformation grouping must be programmed → Alarm 2043.

- Each selection/deselection of transformations is connected to the function "Clear buffer" (@714). The @714 need not be programmed as it is automatically initiated by the control.

- Cutter radius compensation and tool nose radius compensation must be cancelled before activating the transformation (due to @714).

- Only **one** transformation can be selected at a time in any one channel.

- Transformations which are running parallel in different channels must not refer to the same axes → Alarm 2190.

- The plane definition given in the channel-specific machine data applies for the real system. When a transformation is selected a plane is set for the **fictitious** system. The fictitious plane is defined in the transformation data by assigning the fictitious axes. Deviations from the base planes can be programmed explicitly via G16. The initial setting of the plane is defined as G17 (A_{1F}-A_{2F}) in TRANSMIT.
  G17 is automatically set when transformation has been selected. The plane which was valid before selecting transformation is automatically restored after transformation has been deselected.

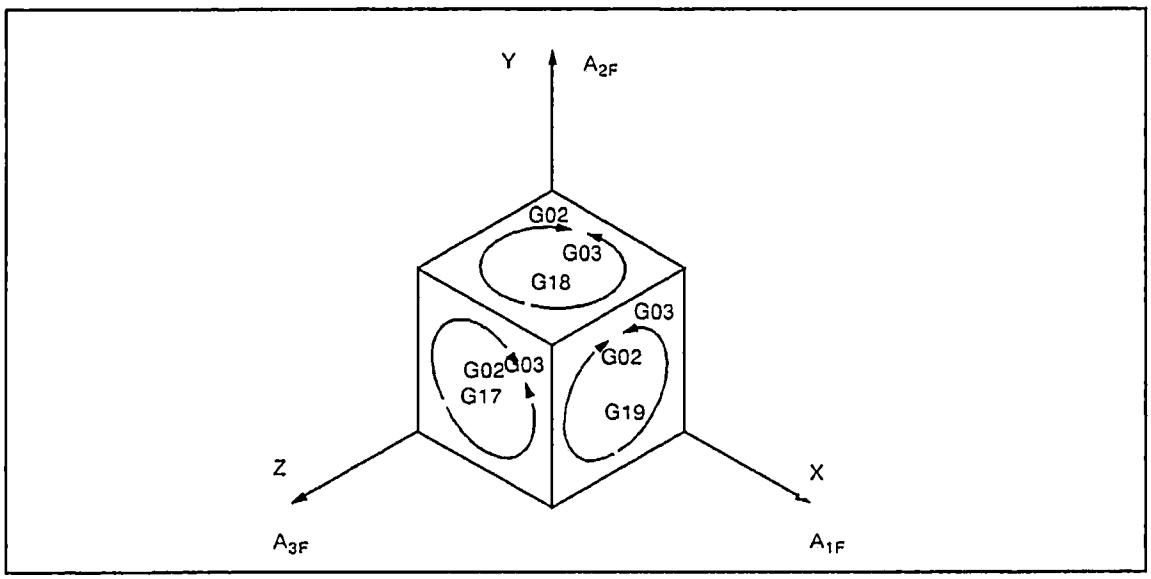

© Siemens AG 1990 All Rights Reserved

- Transformation must not be selected or deselected within a contour block sequence.
- Block search with calculation to a program part where transformation is active is permitted.
- The automatic block search to a program part where transformation is active is **not** permitted.
- PRESET shifts of real axes are ignored in transformation.
- Fictitious axes cannot be traversed with the handwheel. Real axes can only be traversed with the handwheel when transformation is not active.
- DRF is not possible with fictitious axes.
- DRF is possible with real axes only when a program block is active (not for NC STOP).
- The settable angle of rotation for coordinate system rotation (G54 to G57) must always be ZERO.
- The programmable angle of rotation for coordinate system rotation (G58, G59) must also be ZERO when transformation is selected or deselected.

© Siemens AG 1990 All Rights Reserved

12.4.8 Examples of coordinate transformation

12.4.8.1 Example of TRANSMIT coordinate transformation

A transformation data set for the TRANSMIT transformation must be defined as follows:

NC MD 5060 Channel number of the transformation Example: 0000 0010 (binary form) (channel 2)

NC MD 5061 G function for transformation selection

G131	0001 0001
G231	0010 0001
G331	0011 0001

NC MD 5062 Axis name 1st fictitious axis (A_{1F})
NC MD 5063 Axis name 2nd fictitious axis (A_{2F})

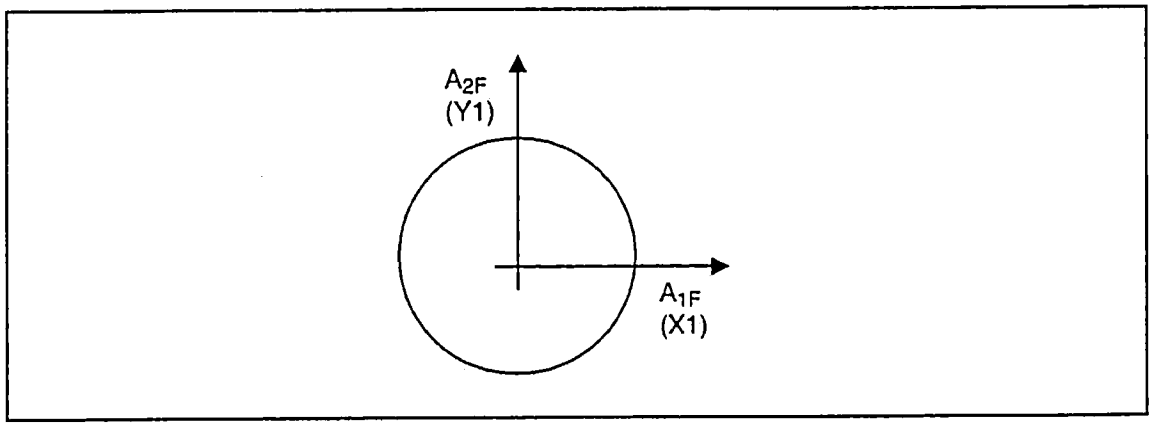

NC MD 5064 Axis name of the infeed axis (real axis) Example: 0000 0010 (Z)

NC MD 5065 Axis name of the 1st real axis (A_{1R}) - linear axis
NC MD 5066 Axis name of the 2nd real axis (A_{2R}) - rotary axis

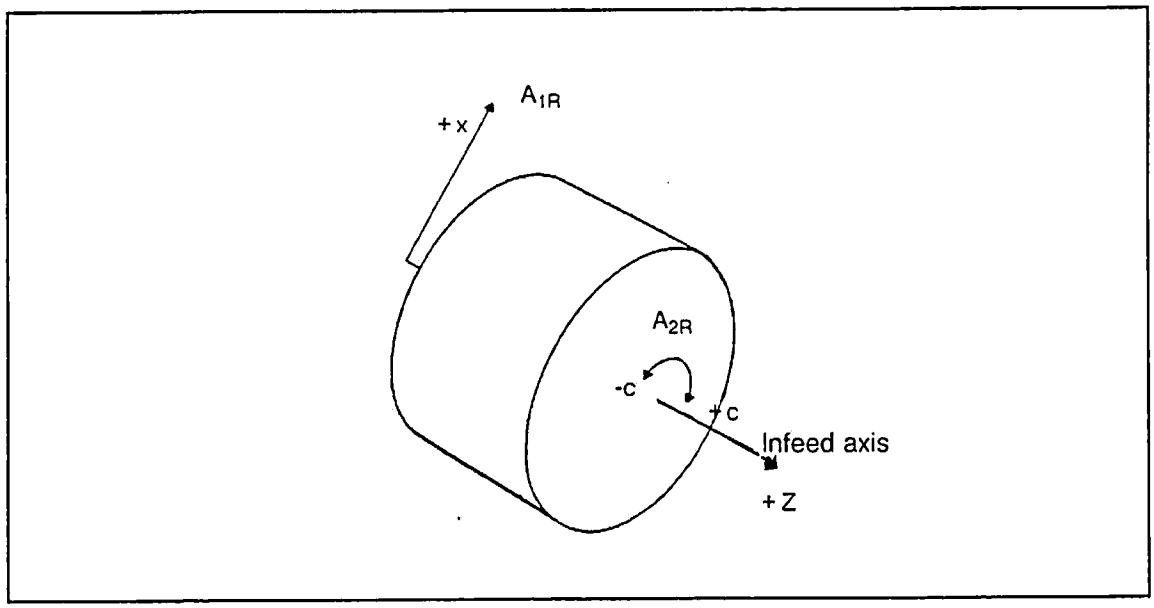

NC MD 5067 to 5069 unassigned (Input: 1111 1111)

See Programming Guide for programming example.

© Siemens AG 1990 All Rights Reserved

12.4.8.2 Example of 2D coordinate transformation

A transformation data set for 2D coordinate transformation must be defined as follows:

NC MD 5060 Channel number of the transformation
Example: 0000 0010 (binary form) (channel 2)

NC MD 5061 G Function for transformation selection G133 0001 0011
G233 0010 0011
G333 0011 0011

NC MD 5062 Axis name 1st fictitious axis (A_{1F}) -X1
NC MD 5063 Axis name 2nd fictitious axis (A_{2F}) -Y1

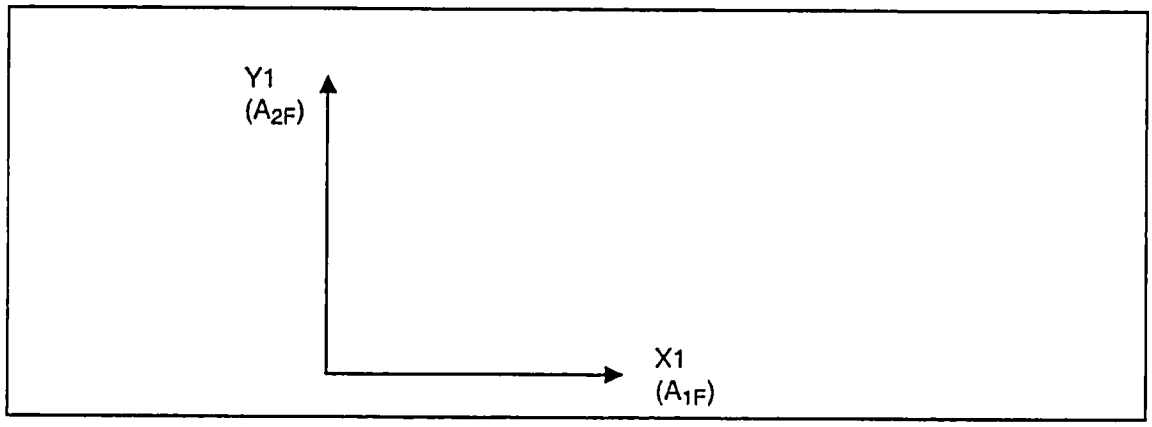

NC MD 5064 Axis name of the infeed axis (real axis) Example: 0000 0010 (Z)

NC MD 5065 Axis name of the 1st real axis (A_{1R}) - linear axis Example: 0000 0000 (X)
NC MD 5066 Axis name of the 2nd real axis (A_{2R}) - rotary axis Example: 0000 0101 (C)

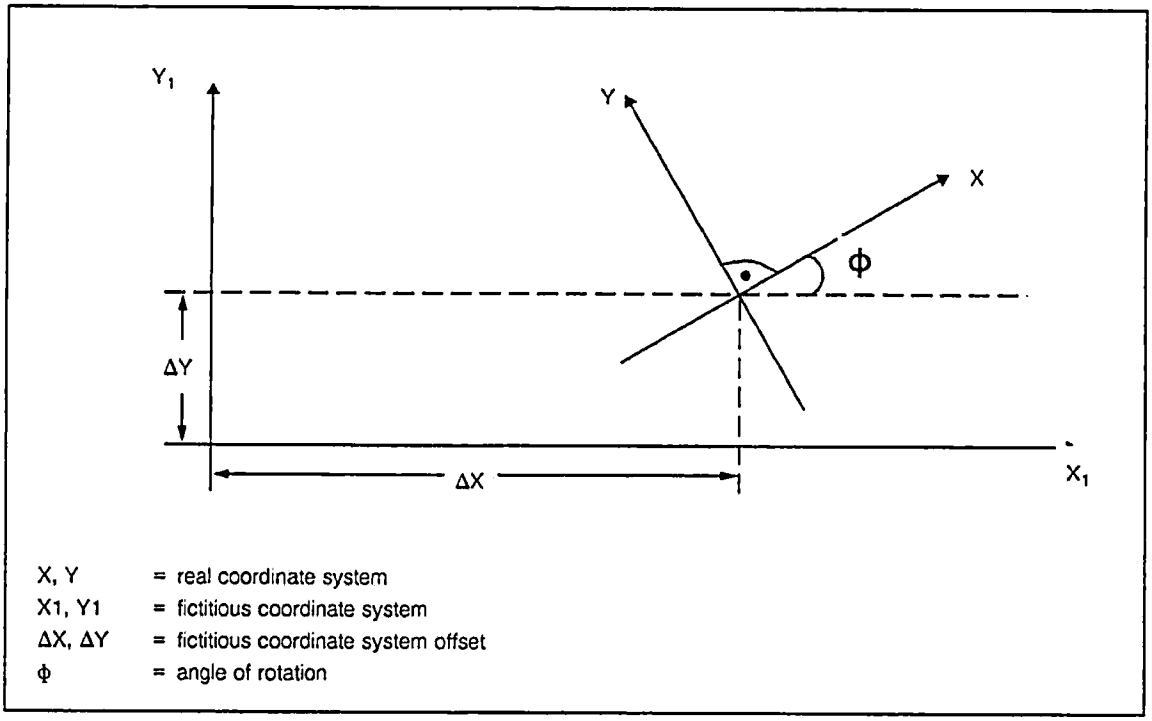

NC MD 5067 to 5069 unassigned (Input: 1111 1111)

See Programming Guide for programming example.

© Siemens AG 1990 All Rights Reserved

12.4.8.3 Example of 3D coordinate transformation

A transformation data set for 3D coordinate transformation must be defined as follows:

NC MD 5060 Channel number of the transformation
Example : 0000 0010 (binary form) (channel 2)

NC MD 5061 G Function for transformation selection

G135	0001 0101
G235	0010 0101
G335	0011 0101

NC MD 5062 Axis name 1st fictitious axis (A_{1F}) - X1
NC MD 5063 Axis name 2nd fictitious axis (A_{2F}) - Y1
NC MD 5064 Axis name 3rd fictitious axis (A_{3F}) - Z1

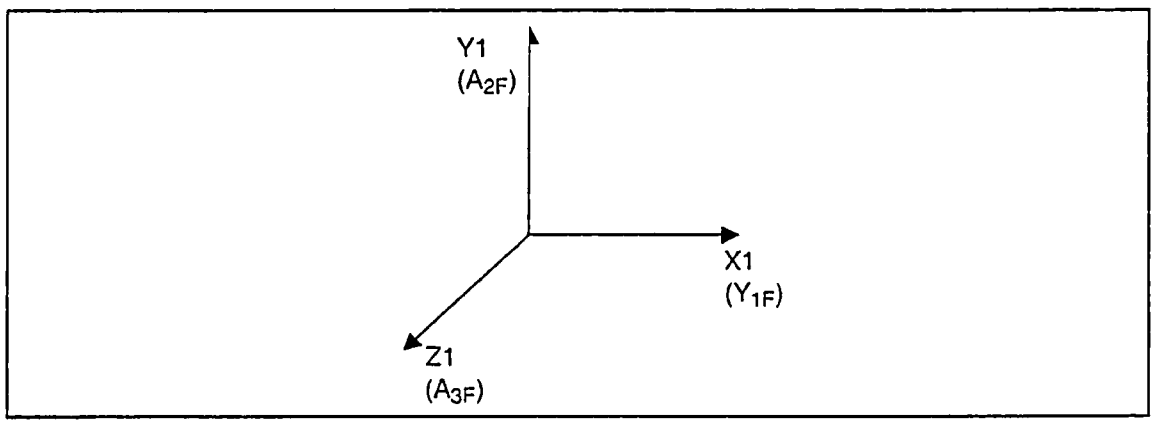

NC MD 5065 Axis name 1st real axis (A_{1R}) - X
NC MD 5066 Axis name 2nd real axis (A_{2R}) - Y
NC MD 5067 Axis name 3rd real axis (A_{3R}) - Z

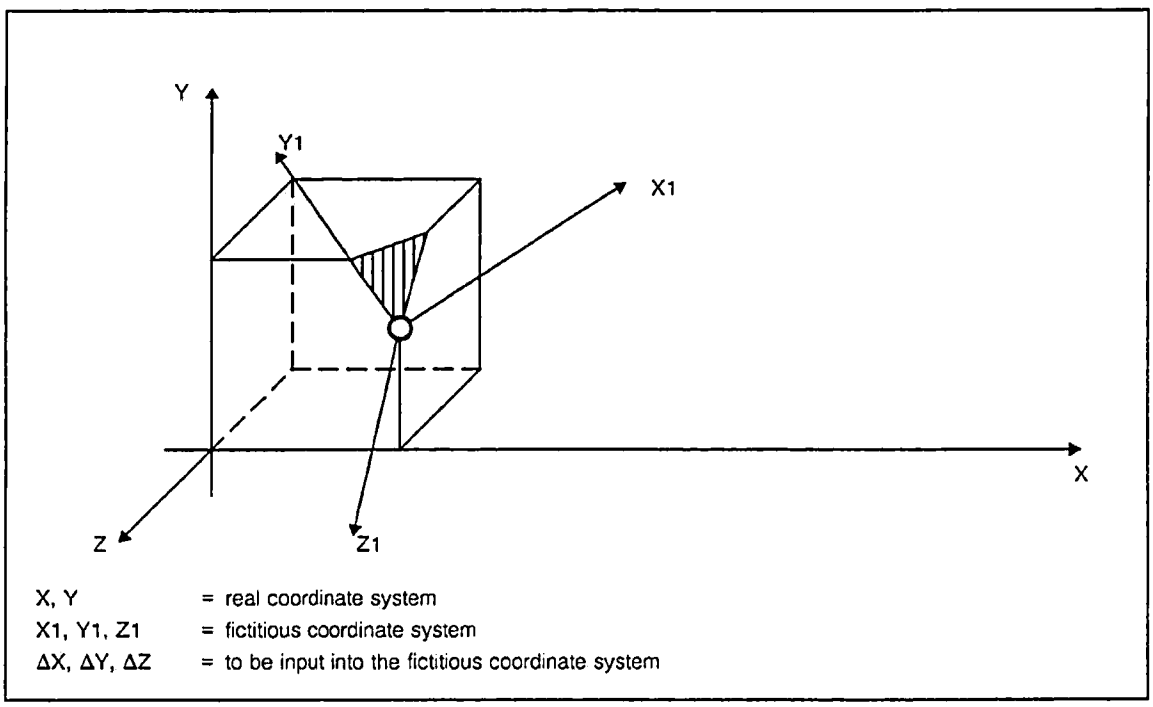

NC MD 5068 to 5069 unassigned (Input: 1111 1111)

See Programming Guide for programming example.

© Siemens AG 1990 All Rights Reserved

12.5 Spindle functions

12.5.1 Overview

In software version 2 the following spindle functions are available:

- Speed-controlled spindle
- Oriented spindle stop
- Position-controlled spindle (C axis)

The individual spindle functions are produced with the following **spindle modes**:

- **Control mode** — Spindle rotates with constant speed or cutting rate (open-loop control of spindle speed)
- **Oscillation mode** — Spindle rotates at constant motor speed setpoint (open-loop control of spindle speed)
- **Positioning mode** — Spindle stops at a preset position (oriented spindle stop)
- **C axis mode** — Spindle acts like a rotary axis (position-controlled spindle)

The principle improvements are:

- Spindle speeds up to 99 999 rev/min without actual-value encoder
- Spindle speeds up to 30 000 rev/min with actual-value encoder
- Encoder-specific resolution
- Monitoring of encoder cutoff frequency
- Adjustable zero mark
- Improved C axis mode
- Higher C axis speeds
- Improved positioning mode

© Siemens AG 1990 All Rights Reserved

Fig. 2.1 provides an overview of the functions available and also the flow of data and commands. Data flows in the direction indicated:

↓ Setpoints and control data
↑ Actual values and status data
→ Switching commands
← Status

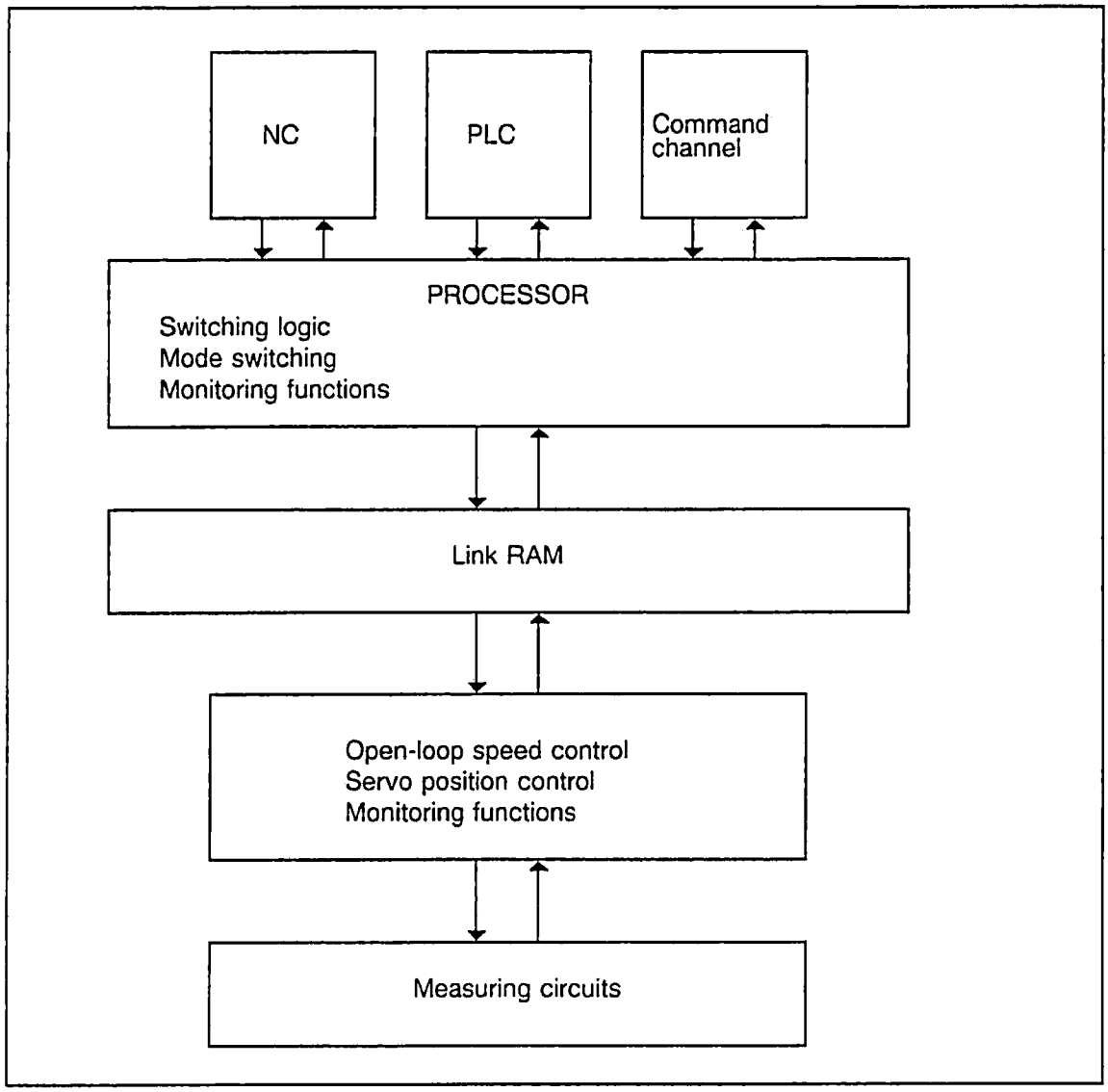

Structure of spindle control

© Siemens AG 1990 All Rights Reserved

12.5.2 Description of the spindle modes

The following is a description of the various modes in which the spindle may be operated. The individual modes can be programmed by NC (part program MDA, overstore), PLC or command channel (CC). The functions that are then available are given in each case.

The various command sources (NC, PLC or CC) have different priorities, i.e. they can interrupt or interlock each other.

The various switching conditions and interlocks are dealt with in the section headed "Switching logic".

12.5.2.1 Open-loop control mode

General

In the open-loop control mode, the spindle is issued with a setpoint for speed (or cutting rate) and direction of rotation. The setpoint that has been input can be altered by "Speed override" when necessary.

Actual value acquisition

- The open-loop control mode normally requires no encoder for actual value acquisition except if the spindle is to be used for thread-cutting or the "Revolutional feedrate" function in which case an encoder must be mounted on the spindle.
- If an encoder is fitted, it is also used in the open-loop control mode for monitoring and displaying the actual values (of speed and position). The encoder must be mounted directly on the spindle so that the actual speed and position of the spindle can be measured.

12.5.2.2 Selecting the open-loop control mode

Open-loop control mode is selected by NC, PLC or command channel. The following functions are possible:

PLC: Request for open-loop control mode

- Constant speed and direction of rotation:
  - IS:INITIALIZE
  - set speed from MD 449*
  - set direction of rotation with IS:SET ROTATION CW

CC: Request for control mode

- Constant speed and direction of rotation:
  - "S external" function
  - set S value (speed) and M3, M4 (rotation) or M5 (spindle stop) in user data of command channel

NC: Request for open-loop control mode

- Constant speed and direction of rotation
  - programming of S value, M3, M4, M5, G94, G95, G97
- Constant cutting rate
  - programming of S value, M3, M4, M5 and G96
- Thread-cutting
  - programming of S value, M3, M4, M5 and G33, G34, G35

© Siemens AG 1990 All Rights Reserved

12.5.2.3 Gear ratio changing

Gear ratio changing is only possible in the open-loop control mode. There can be up to eight different ratios between motor and spindle

A permitted range of speed can be laid down for each gear ratio by defining maximum and minimum speed values. If the speed setpoint does not fall within the range of the gear ratio that is currently active, the number of the required gear ratio is ascertained automatically and entered into the interface to the PLC together with IS:CHANGE GEAR.

The PLC user program executes the gear change, acknowledges the request by resetting IS:CHANGE GEAR and enters the new gear ratio into the interface.

If no suitable gear ratio for the programmed speed exists, no request for gear changing is generated. The programmed speed is then transferred to the current gear ratio. So it is important to ensure that there is always a suitable gear ratio available.

The behaviour of the spindle during gear ratio changing can be influenced by MD 521*, bit 5 "New S value after PLC acknowledgement". If the bit is set, the programmed speed setpoint will only be accepted when the PLC has acknowledged gear ratio changing. This prevents an unwanted increase in speed while still in the old ratio before changeover.

12.5.2.4 Data required

This section describes the data that is of particular significance to the open-loop control mode.

- **Limiting the speed**

  Parameters for maximum and minimum speed limits can be assigned for each gear ratio. Parameter assignment is effected through the machine data:
  - MD 403* to 410* "Max. speed" per gear ratio
  - MD 411* to 418* "Min. speed" per gear ratio

  Entering a zero for the maximum speed of a gear ratio will prevent it being used, should that be necessary.

  Regardless of which gear ratio is active, the speed is limited by:
  - MD 451* "Max. chuck speed"
  - MD 448* "Min. motor speed"
  - SD 401* "Programmable spindle speed limit for G96"; programmed with G92
  - SD 403* "Programmable spindle speed limit"; programmed with G26

- **Limiting the acceleration**

  In order to avoid excessive acceleration when changing speeds, the setpoint is ramped up or down accordingly by means of a ramp-function generator. The maximum value of acceleration to be used is assigned by means of an acceleration time constant. A separate acceleration time constant must be specified for each gear ratio employed:

  - MD 419* to 426* "Acceleration time constant without position control"

© Siemens AG 1990 All Rights Reserved

12.5.3 Oscillation mode

The oscillation mode can be used with gear ratio changing to facilitate engagement of the gear by oscillating the spindle.

Preconditions

The request for the oscillation mode comes from the PLC. The PLC user program sets the IS:OSCILLATION SPEED. The following conditions must be satisfied:

- IS:PLC SPINDLE CONTROL set
- Spindle must not be working as leading spindle or following spindle in synchronous mode

Parameter assignment

- The motor setpoint for oscillation speed is issued by MD 450*. The sign of the setpoint, and hence the direction of rotation, is determined by IS:SET ROTATION CW
- There is no acceleration or speed limitation in the oscillation mode.

Implementation

- The spindle is actually oscillated by the setpoint being output with an alternating sign. This has to be implemented in the PLC user program by inverting IS:SET ROTATION CW.

12.5.4 Positioning mode

12.5.4.1 General

In the positioning mode, the spindle is driven to a preset position under position control and stopped there. The position is reached either directly (M19) or **through several revolutions** (M19tsr).

Position control and actual value acquisition

- Static feedforward control can be activated in order to improve dynamic response in the position-control mode. The feedforward control factor must be entered in MD 465*.
- Actual value acquisition is needed for position control. Therefore, an encoder must be mounted directly on the spindle.
- The reference point for the angle measuring system is the zero mark of the encoder. A permanent offset to the zero mark can be established by using the zero mark shift (MD 459*).

Accuracy

- The position is entered with an accuracy of 0.01°. The positioning accuracy achieved by the spindle depends on a number of factors:
  - The resolution of the angle measuring system
  - The gain factor of the active gear ratio
  - The drift
  - The interfacing to the drive system.

Restrictions

- Gear ratio changing cannot be employed in the positioning mode.
- M19 must not be activated or programmed when the G96 function is active.

© Siemens AG 1990 All Rights Reserved

12.5.4.2 Selecting the positioning mode

Positioning mode can be selected by NC, PLC or command channel. The following functions are available:

PLC: Request for M19
- IS:POSITION SPINDLE
  - set position from MD 452*

CC: Request for M19tsr
- "Incremental spindle positioning" function
  - set incremental traversing path in user data of command channel
  - spindle override remains active

NC: Request for M19
- M19 in part program or during overstore
  - set position as S value
  - set position from setting data (SD 402*) if no S value has been programmed.

12.5.4.3 Data required

This section describes the data that is of special significance to the positioning mode. A detailed description of the machine data and setting data will be found in Section 4.

- **Position**

  An absolute position is given in response to a request from the NC or PLC. The position is specified by S value, machine data or setting data. The values must be within the range 0 to 359.99° and the entry must be to an accuracy of 0.01°.

- **Distance traversed**

  An incremental path is given in response to a request from the command channel. This path is specified in the user data of the command channel and can be more than one revolution. The size is only limited by the numerical format. The value must again be accurate to 0.01° and its mathematical sign determines the direction of rotation for positioning.

- **Override factor**

  The speed during positioning can be influenced by the override factor.

  A request from the NC or PLC causes the speed override to be interpreted or, on request from the command channel, the channel-specific feedrate override.

- **Other data**

  Positioning is effected with interpolation guiding and under position control. The following data is needed:
  - Maximum permitted speed during positioning
  - Maximum permitted acceleration
  - Gain factor
  - Position window

  This information is transferred to the user data on request from the command channel.

© Siemens AG 1990 All Rights Reserved

When there is a request from the NC or PLC, the corresponding machine data of the active gear ratio is used, which is:

- MD 427* to 434* "Creep speed for M19" as max. speed during positioning
- MD 478* to 485* "Acceleration time constant with position control" for limiting the acceleration rate during acceleration and deceleration
- MD 435* to 442* "Gain factor" for the position controller
- MD 443* "Position tolerance" for establishing the position window (regardless of the active gear ratio)

If the gain factor is required to be changed in the positioning mode, the following will also be needed:

- MD 469* "Factor for gain changing"

12.5.4.4 The positioning sequence

This section describes in detail the principle of the positioning sequence since it is now different from the conventional spindle control.

To begin with, it is necessary to distinguish between absolute positioning (M19 from NC or PLC) and incremental positioning (M19tsr from command channel).

- **Absolute positioning**

  The spindle is to be brought to a preset angular position as quickly as possible and stopped there. Driving to a particular position is only possible if the spindle is synchronized with the encoder, i.e. if the zero mark has been overtravelled once. It is only then that the absolute position of the spindle can be defined.

  1. Spindle synchronized with encoder

     a) Spindle stopped

     The spindle is driven to the preset position by the shortest path. This means that the path to be traversed is always within the range -180 to +180°. Determining the shortest path also determines the direction of rotation.

     The maximum speed attained during positioning is the creep speed.

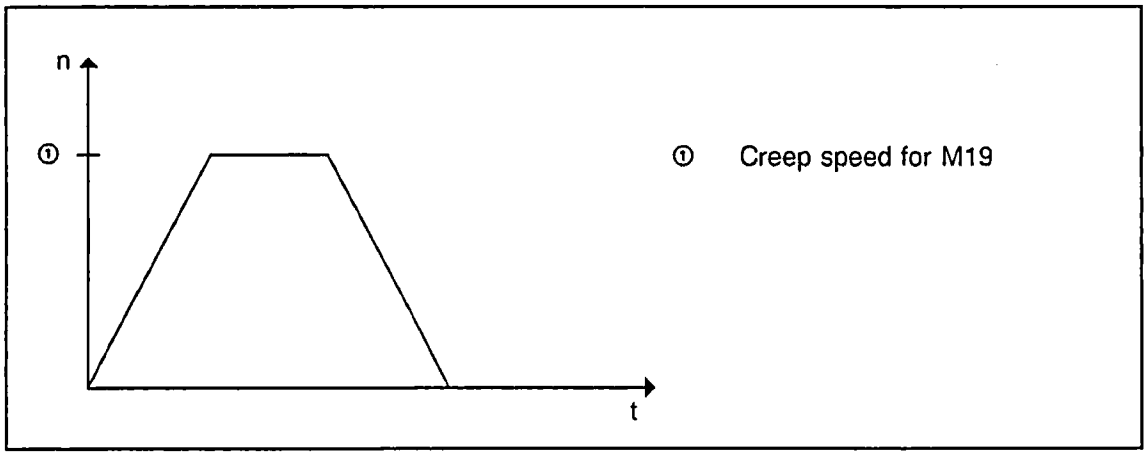

Speed characteristic for case 1a

© Siemens AG 1990 All Rights Reserved

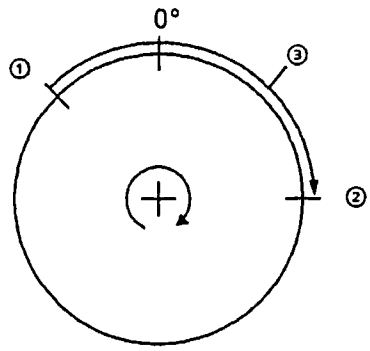

Example

①	Actual position:	315°
②	Programmed position:	90°
③	Shortest path:	+135°

Example for case 1a

b) Spindle running

The spindle is driven to the specified position as quickly as possible, without changing the direction of rotation.

The nearest position at which the spindle can be stopped is calculated from the actual position and the deceleration distance based on the momentary speed. The spindle is driven to the specified position in the direction of travel. The sum of this required distance and the deceleration distance then gives the distance to be traversed, which is covered as quickly as possible.

If the actual speed is less than the creep speed, the spindle is accelerated up to and no further than the creep speed.

If the actual speed is greater than the creep speed, the actual speed is retained until the spindle can be stopped at the specified position utilizing maximum deceleration.

© Siemens AG 1990 All Rights Reserved

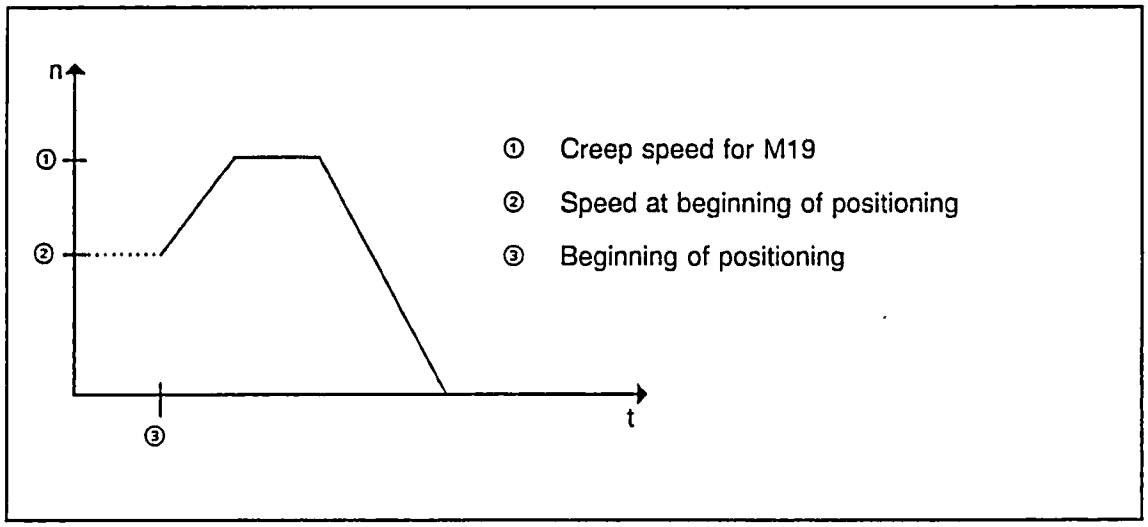

Speed characteristic for case 1b (actual speed < creep speed)

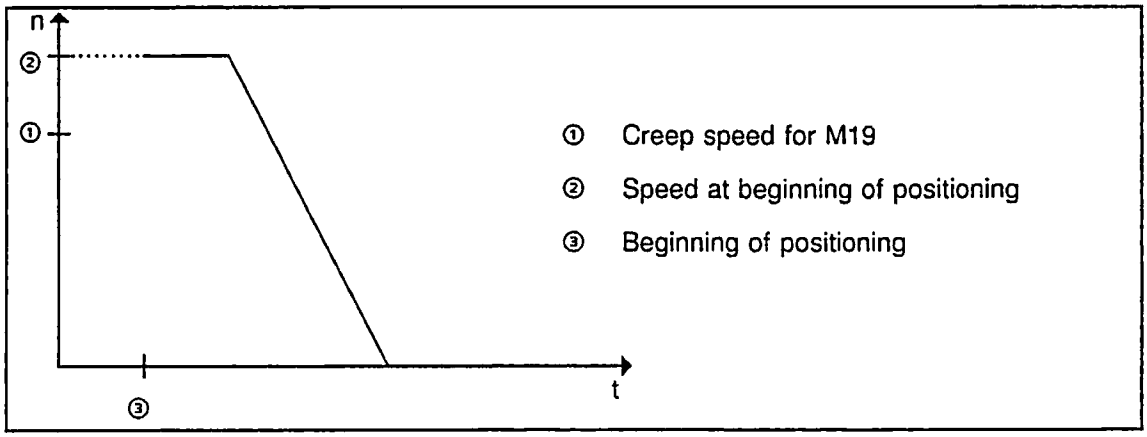

Speed characteristic for case 1b (actual speed ≥ creep speed)

© Siemens AG 1990 All Rights Reserved

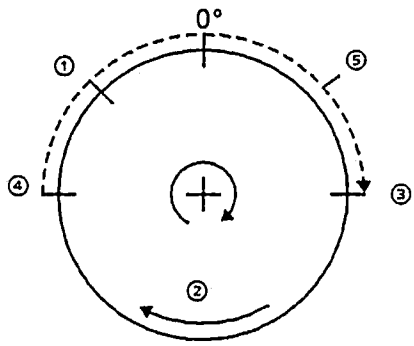

Example

①	Actual position:	315°
②	Actual rotation:	positive
③	Programmed position:	90°
④	Nearest position at which spindle can be stopped:	270°
⑤	Distance to be traversed in addition to the deceleration distance:	+180°
	Total distance to be traversed:	+495°

Example for case 1b

2. Spindle not in synchronism with zero mark

   In this case, neither the actual position nor the distance to be traversed can be ascertained correctly.

   Therefore, the spindle is first driven at creep speed (MD 427* to 434*) until the zero mark of the encoder is recognized.

   This allows the internal actual-value counter to be synchronized with the encoder. The remainder of the positioning sequence is identical to that of case 1b.

© Siemens AG 1990 All Rights Reserved

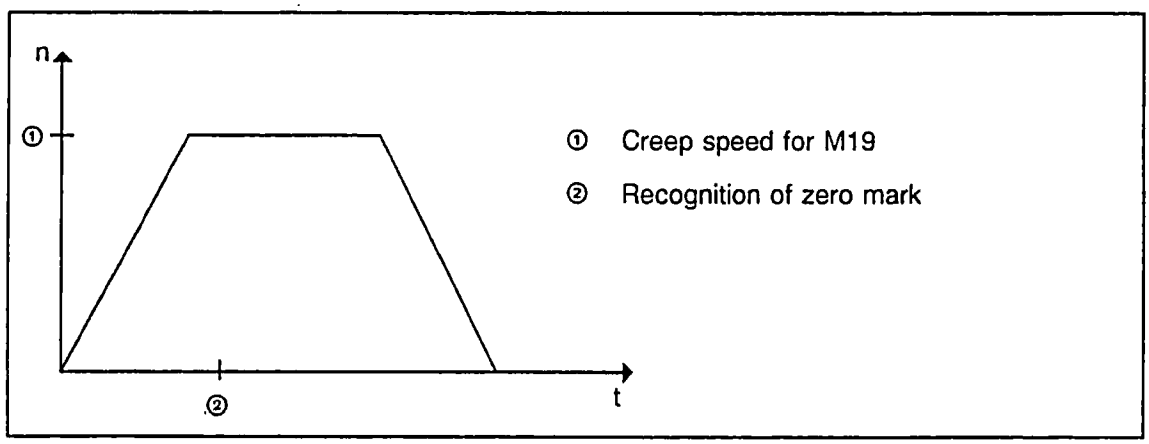

Speed characteristic for case 2

- **Incremental positioning**

  There are two preconditions to be fulfilled in this case:

  - spindle stopped
  - spindle synchronized with encoder

  The specified angle in this case is not the position to be reached but the distance to be traversed. The starting point for this distance is the last position to which the spindle was driven (last M19 position). The direction of rotation is determined by the sign of the programmed path.

  If the spindle has not been driven to an absolute position before incremental positioning is carried out for the first time, the starting point is assumed to be 0°.

  It is possible, e.g. due to drift, that the actual position does not agree with the last M19 position. In this case the discrepancy is included in the distance to be traversed.

  The actual position can be uniquely defined only within one revolution (0 ... 360°). Since one assumes that the spindle has moved little since the last positioning, the difference is defined in the range -180 to +180°.

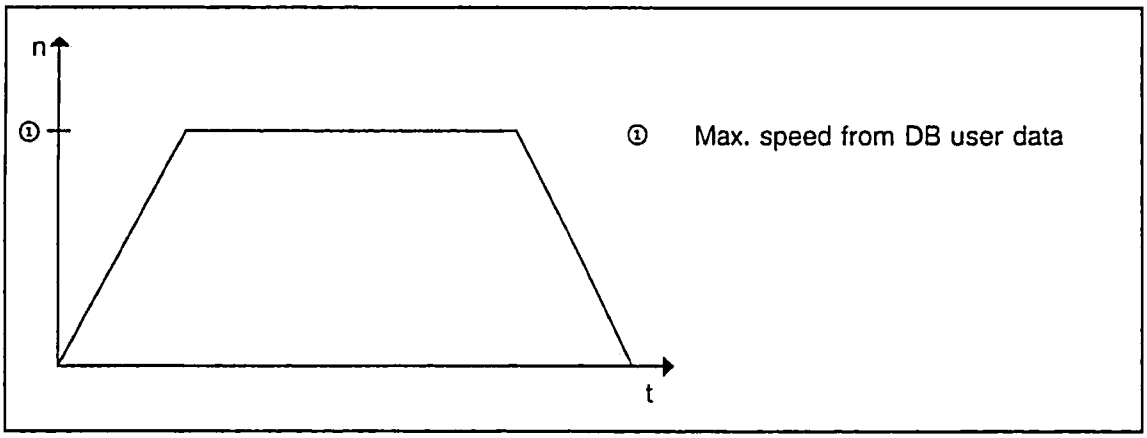

Speed characteristic for incremental positioning

© Siemens AG 1990 All Rights Reserved

Examples

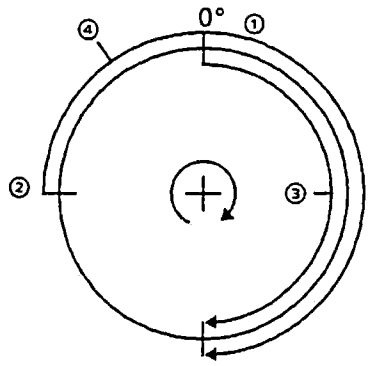

①	Last M19 position:	0°
②	Actual position:	270°
③	Specified travel:	+180°

This means that the spindle has moved 90° from the last M19 position in the opposite direction to the specified direction, so the total is:

④	Distance to be traversed:	+270°

Example 1

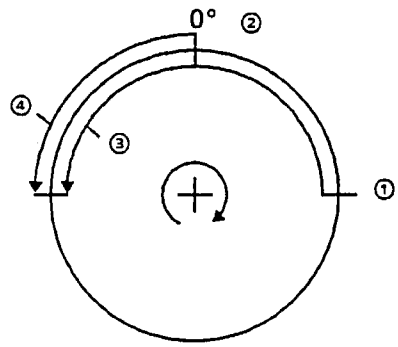

Example 2

© Siemens AG 1990 All Rights Reserved

12.5.4.5 Gain factor change

In the positioning mode it must be possible to drive the spindle to a target position from full speed under position feedback control. The spindle must be held at the target position even when there is drift.

To ensure that the spindle is steady at rest, even in the presence of drift, very small set speeds with very high resolution must be given to the drive actuator via the analog interface.

The speed setpoints are transferred as voltage signals via the analog interface between control system and drive actuator. Under some circumstances the control behaviour can be improved by increasing the voltage level (relative to the set speed) because it enables a higher resolution to be achieved and the analog interference noise can be reduced.

Consequently, with some drive actuators, such as the SIMODRIVE 650, a different normalization for the set speeds (voltage levels) can be selected by applying a configurable terminal signal.

This changing of the normalization in the drive actuator must be allowed for in the control so that, overall, the effective gain factor remains the same. The gain factor (dependent on gear ratio, MD 435* to 442*) must be adapted to the new normalization.

The factor for gain changing is entered as machine data. The value is calculated from:

$$\text{MD } 469^* = \frac{1}{N}$$

where N = normalization factor in the drive actuator

Changing of the gain factor must be initiated by the PLC user program with the interface signal CHANGE GAIN FACTOR (DW K + 1, bit 15).

The diagram below is intended to illustrate the changeover process using SIMODRIVE 650 as an example.

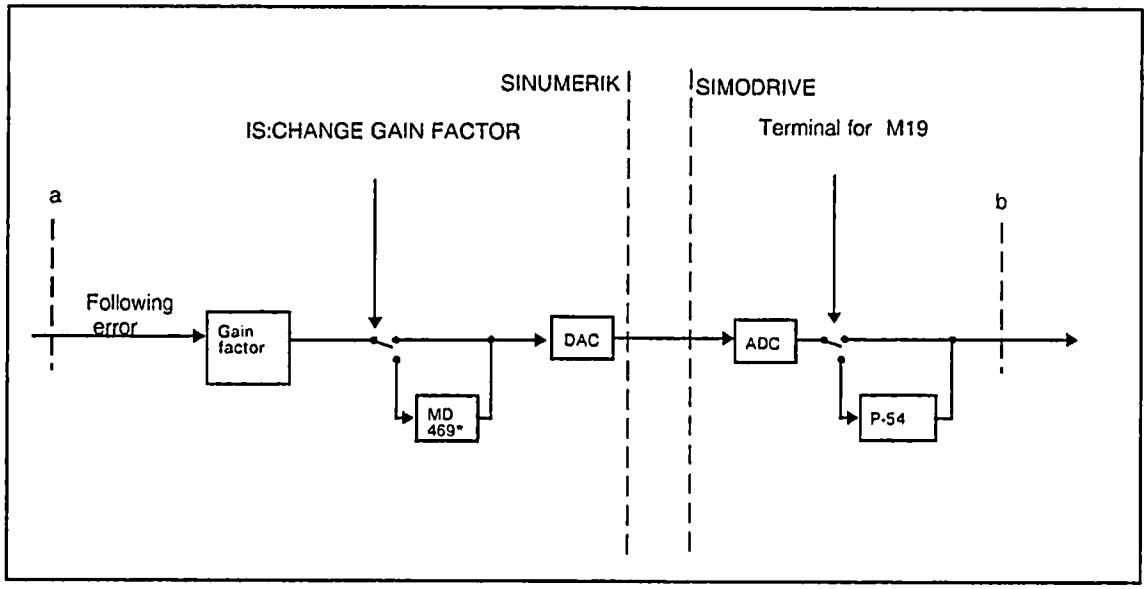

Simplified block diagram

© Siemens AG 1990 All Rights Reserved

Referring to the SIMODRIVE 650 Operating Instructions will explain the following:

P-54:	Normalization factor for set speeds (M19 mode)
Terminal for M19:	Terminal configurable with P-83 to P-85

The block diagram shows that MD 469* and the SIMODRIVE parameter P-54 must add up to 1 in order to obtain the same effective gain factor between points a and b with or without changeover

It is also apparent that, for stable control behaviour, the changeover of the gain factor and the speed normalization must always take place **simultaneously**. Only then will the effective gain factor remain the same.

Gain factor change in the positioning mode

In order to position the spindle from full speed, it must first be possible to transfer the maximum speed setpoints. Consequently, when the positioning mode is started, neither changeover of the drive actuator normalization nor changeover of the gain factor must be activated.

Changeover should only be effected when the spindle has come to rest. Therefore, it is sensible for it to be done when the interface signal SPINDLE STOPPED has been set by the NC system.

In all cases it is essential for the value of speed setpoint (voltage level) to be transferred to be less than 10 V after changeover.

If the spindle is to be positioned several times in succession, it can be convenient for changeover to remain activated at the start of the second positioning sequence and the subsequent ones. However, then it will be necessary to ensure that the maximum speed attained during positioning (see section headed "The positioning sequence") is less than the speed that can be transferred via the analog interface at a maximum of ± 10 V.

© Siemens AG 1990 All Rights Reserved

12.5.4.6 Aborting the positioning mode

The specified position is regarded as having been reached (or the distance as having been traversed) when the spindle is within the position window. This is signalled to the PLC by setting IS:SPINDLE POSITION REACHED.

The position is held under position control until the M19 function is aborted. The conditions for aborting are as follows:

- IS ACKNOWLEDGE M19
- M3/M4 in part program or command channel
- Select C axis or synchronous mode
- Program end
- Reset

Abort behaviour can be influenced by MD bits (see section headed "Switching logic").

Setting IS:SPINDLE DISABLE or resetting IS:SERVO ENABLE interrupts the positioning mode. If the signal is reset again or set again, positioning is continued, but with the following exception:

- If the positioning mode was selected from the command channel, it will be interrupted if IS:SERVO ENABLE is reset. An error message will be entered in the user interface. Positioning will **not** be continued, however, if the signal is set again.

12.5.5 C axis mode

12.5.5.1 General

In the C axis mode the spindle is operated as a **position-controlled rotary axis.** As such, it can be included in the interpolation with other axes (e.g. TRANSMIT coordinate transformation).

Assignment and parameterizing

- Each spindle can be assigned just one C axis by means of the machine data (MD 461*). Like all axes, this must be parameterized via the axial machine data.

© Siemens AG 1990 All Rights Reserved

Position control and actual value acquisition

- In the C axis mode, the position controller works with the axial servo gain factor which must be adapted to the active gear ratio between motor and spindle. Therefore, no gear ratio changing is possible in the C axis mode.
- Static feedforward control can be activated in order to achieve better dynamic response in the position-control mode too. The feedforward control factor must be entered in MD 465*.
- If the spindle encoder is not sufficiently accurate for the C axis mode, a separate encoder can be used. An alternative is to use a double-track encoder - one track for the C axis mode and the other for the remainder of the spindle modes.
- The zero mark of the spindle encoder serves as the reference point for the C axis. The actual-value system of the C axis is automatically synchronized with the spindle

  However, the axis-specific signal IS:REFERENCE POINT REACHED is not set, so it is also possible to employ reference point approach for the C axis (see also the section headed "Synchronizing and referencing").
- If reference point approach for the C axis is not to be used, MD 560*, bit 4 "No start disable for reference point" must be set.

12.5.5.2 Selection and deselection of the C axis mode

Selection and deselection of the C axis mode is effected by the NC system (part program, MDA, overstore) with customer-specific M functions. The numbers of the functions are stored in the machine data (MD 260, 261). The address extension as for spindles must be used in the programming.

The C axis mode can only be selected when the spindle is at rest. IS:SPINDLE SYNCHRONIZED must be set, the USET/RSET switch in the user data of the "S external" command channel function must not be set and IS:PLC SPINDLE CONTROL must not be set.

The PLC system must enable selection of the C axis mode with IS:INITIATE C axis MODE. If necessary, the PLC user program must stop the spindle beforehand (e.g. M19 from PLC) and change over to the correct gear ratio.

The C axis mode can only be deselected with the appropriate M function or a hardware reset.

12.5.5.3 Synchronizing and referencing

Spindle position is acquired in relation to a fixed reference point which itself is determined from the zero mark of the spindle encoder.

The reference systems for the spindle and the associated C axis should always be identical, so both systems are referred to the zero mark of the spindle encoder. A parameterized shift of the zero mark (MD 459*) is taken into account

Both systems have the absolute position 0 at the position determined by the zero mark and the shift.

© Siemens AG 1990 All Rights Reserved

Synchronizing the spindle

When the control system has been run up, the spindle is automatically synchronized with the encoder as soon as it passes the zero mark of the encoder for the first time. Only then can the absolute position of the spindle be determined.

Synchronism will be lost if the cutoff frequency of the encoder is exceeded at high spindle speeds. Resynchronizing takes place automatically when the frequency is reduced again below the critical value.

The PLC system can initiate re-synchronizing of the spindle with IS:RESYNCHRONIZE SPINDLE. Acknowledgement is with IS:SPINDLE SYNCHRONIZED.

Referencing the C axis

Reference point approach like that employed with feed axes is not normally needed for spindles operated in the C axis mode. No reference point cams are usually provided because the zero mark of the spindle encoder uniquely defines the reference point in relation to one revolution.

Nevertheless, reference point approach is still possible with the C axis (e.g. with G74). The sequence is the same as for normal feed axes, except that the reference point offset (MD 244*) and reference point value (MD 240*) are not taken into account. The C axis is referenced with the accuracy of the spindle encoder.

The reference point is defined by the zero mark of the spindle encoder and the relevant zero mark offset. If no parameters have been assigned for zero mark offset, the C axis will stop at the zero mark of the spindle encoder after reference point approach.

Taking the zero mark offset into account provides the facility described below for optimizing reference point approach for a C axis.

Notes

- If no explicit reference point approach has been performed for the C axis, the axis-specific IS:REFERENCE POINT REACHED is not set. Therefore, the bit
  - MD 560*, bit 4 "No start disable for reference point"
    must be set if the axis is to be driven in the automatic mode.

- MD 560*, bit 4 must not be set if an explicit reference point approach has been performed for the C axis.

- If the mechanical link between spindle and C axis encoder is deactivated, IS:REFERENCE POINT REACHED must be cancelled by setting IS:PARKING AXIS (see below).

  PARKING AXIS may only be reset when the mechanical link is re-established.

- With rotary axes it is usually unnecessary to monitor software limit switches. If monitoring is required for a C axis, an explicit reference point approach must be performed.

- The alarm "Excessive feed" is triggered if the cutoff frequency of the C axis encoder is exceeded.

- Explicit referencing must be employed (e.g. G74) if the difference between the accuracy of the entry and the accuracy of the measuring system is greater than a factor of 10 (e.g. entry accuracy 10^{-4} and position control accuracy 0.5×10^{-2} mm).

© Siemens AG 1990 All Rights Reserved

Optimizing reference point approach

Zero mark offset (MD 459*) for a specific spindle is taken into account in reference point approach. If the value 0 is entered, the results are as follows:

- Deceleration is initiated when the zero mark is overtravelled.
- After coming to a halt, the spindle positions back to the zero mark in the opposite direction.

The disadvantage of this method is the reversal of direction. Backlash can alter the reference point, although the situation can be remedied with the zero mark offset.

In order to prevent the direction being reversed when passing the zero mark, the zero mark offset must be greater than the distance needed by the axis to decelerate after the zero mark has been detected.

The value of zero mark offset must be determined by trial and error; it depends on the reference point creep velocity (MD 284*).

If the offset is chosen correctly, the creep velocity can be made greater.

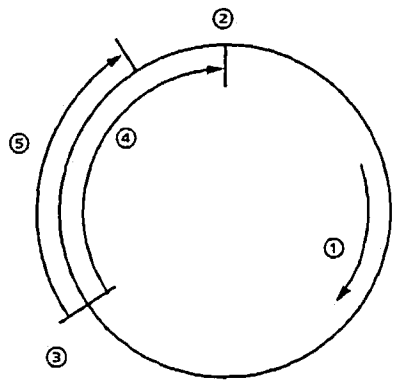

① Direction of reference point approach
② Required reference point
③ Zero mark
④ Zero mark offset
⑤ Deceleration distance

Reference point approach with zero mark offset

Parking axis

If a C axis is assigned to a spindle via MD 461*, axis-specific interface signals (DB 32) are also evaluated. Two axis-specific signals in particular should be mentioned here that have feedback effects on spindle operation.

The measuring circuit monitoring functions are switched off by setting the signal PARKING AXIS. Then, no alarm appears if the connection between encoder and measuring circuit module is broken (for instance, in order to detach the axis from the machine).

Another application occurs if the cut-off frequency of the C axis encoder were to be exceeded at higher rotational speeds when the spindle is operating. The axis can then be "parked" and reactivated only when the C axis operates again.

© Siemens AG 1990 All Rights Reserved

In addition, a "parking axis" must be switched in the follow-up mode so that the monitoring functions for position control are inoperative (e.g. the zero speed control).

Setting the signals in the C axis mode produces the following results:

- PARKING AXIS 0 → 1
  - The measuring circuit monitoring functions are deactivated.
  - Position control remains active, i.e. actual value acquisition continues.
  - The axis-specific signal REFERENCE POINT REACHED is cancelled.
- Additional FOLLOW-UP MODE 0 → 1
  - The actual value of spindle position in the basic display is no longer updated.
  - The actual values in the diagnostics display continue to be updated.
  - Position control is interrupted.
  - The analog speed setpoint 0 is output.
  - The speed controller enabling is cancelled.

When the signals are reset, the results are as follows:

- PARKING AXIS 1 → 0
  The spindle-specific signal SPINDLE SYNCHRONIZED is cancelled.
- Additional FOLLOW-UP MODE 1 → 0
  Re-synchronizing of the spindle and re-referencing of the C axis are requested.

Re-synchronizing of the spindle is necessary because the C axis too is always related to the zero mark of the spindle.

- Overtravelling the zero mark with any spindle motion.
- Explicit reference point approach in the C axis mode.

There are basically two alternatives for reactivating a parking axis in the follow-up mode:

Alternative 1:

- First FOLLOW-UP MODE 1 → 0
  - For the basic display the actual value is taken from the spindle (diagnostics display).
  - Position control is reactivated. The assumed actual value of position is issued as the setpoint.
- Then PARKING AXIS 1 → 0
  The spindle-specific signal SPINDLE SYNCHRONIZED is cancelled; so re-synchronizing of the spindle is requested

Alternative 2:

- First PARKING AXIS 1 → 0
  - The actual value in the basic display is taken for the diagnostic display (the actual value when setting IS:FOLLOW-UP MODE).
  - Actual value acquisition is reactivated and the actual values in the basic display and the diagnostics display are updated again.
  - Position control remains interrupted (i.e. analog speed setpoint 0, speed controller enabling cancelled).
  - The spindle-specific signal SYNCHRONIZE SPINDLE is cancelled.
- Then FOLLOW-UP MODE 1 → 0
  - Position control is reactivated. The current actual position is taken as the setpoint position.
  - Re-synchronizing of the spindle (and the C axis) with the zero mark of the spindle encoder is initiated.

© Siemens AG 1990 All Rights Reserved

Notes

- If the positioning mode is requested by the NC or PLC system before the SPINDLE SYNCHRONIZED signal is set again, the spindle will first pass the zero mark before it approaches the programmed position.
- If the PARKING AXIS signal is cancelled in the C axis mode, the axis will have to be explicitly referenced again afterwards (e.g. with G74).

12.5.5.4 Initiating the C axis mode

This section describes various methods of changing over to the C axis mode.

The standard method

The C axis is referenced automatically when the spindle is synchronized (passing the zero mark of the spindle encoder).

When the C axis mode is selected, the spindle is stopped (e.g. M19 from PLC), then the interface signal INITIATE C axis MODE is set and machining with the C axis can begin.

This method cannot be used, however, if the actual value systems of the spindle and C axis are not in agreement, i.e. if the C axis encoder is uncoupled from the spindle in the spindle mode.

Possible reasons for uncoupling the C axis encoder are:

- Cutoff frequency of C axis encoder exceeded in spindle mode.
- C axis not programmed for modulo 360° (MD 572*, bit 2 not set). In this case, the actual value systems must be decoupled otherwise the actual value system of the C axis will track all the motions of the spindle.

  For example, if the C axis were to be driven to 0°, all the revolutions of the spindle in one direction would be cancelled.

The axis-specific interface signal PARKING AXIS must be set in order to decouple the actual value systems (see "Synchronizing and Referencing").

© Siemens AG 1990 All Rights Reserved

Procedure for "parked" axis

The spindle-specific signal SPINDLE SYNCHRONIZED is cancelled when the PARKING AXIS signal is reset, although it is an essential precondition for the selection of the C axis mode.

So, if the PARKING AXIS signal is cancelled in the C axis mode, the C axis must be explicitly referenced (e.g. with G74).

If the signal is cancelled in the spindle mode, the C axis can be referenced automatically when the spindle is synchronized. The following can be employed:

1. Program an M function for selecting the C axis mode.
2. Decode an M function in the PLC user program.
3. Employ user program control:
   - Move the spindle to a position near the zero mark (IS:PLC SPINDLE CONTROL and POSITION SPINDLE).
   - Cancel the signals PLC SPINDLE CONTROL and PARKING AXIS (couple up the C axis encoder first if necessary).
   - Re-synchronize the spindle. There are several alternatives, e.g.:
     - Pass the zero mark at basic speed (IS:PLC SPINDLE CONTROL and INITIALIZE; ascertain direction of rotation with IS:SET ROTATION CW).
   - Cancel the signal PLC SPINDLE CONTROL and set the signal INITIATE C axis MODE.
4. Machining with the C axis

The advantage of this method is that machining with the C axis can begin sooner because a defined axis position is reached quickly.

© Siemens AG 1990 All Rights Reserved

12.5.6 Encoder-specific resolution

Any type of encoder for actual value acquisition (e.g. digital encoders with any pulse rate, SIPOS signal generators) can be used for spindles controlled by 32-bit servo CPUs.

When SIPOS signal generators are used, employing the pulse multiplication on the HMS measuring circuit module also allows a higher resolution to be attained.

The internal calculations for the spindle are performed with the value of resolution provided by the measuring system (the measuring-system resolution). The matching to the different pulse rates is performed in the same way as with axes by means of variable incremental weighting (MD 455*, 456*).

When a spindle is assigned to a C axis via MD 461* (for C axis mode or synchronous mode), the internal calculations for the spindle are also performed with the measuring-system resolution of the C axis. Therefore, the variable incremental weighting for the axis must also be entered (MD 364*, 368*, 1800*).

If there is no separate encoder for the C axis mode, the values of the spindle encoder must also be entered in the axis-specific machine data.

If a different position control resolution has been parameterized for the C axis than for the spindle (0.5 x 10^{-3} degrees), the values for the incremental weighting of the axis must be adapted accordingly.

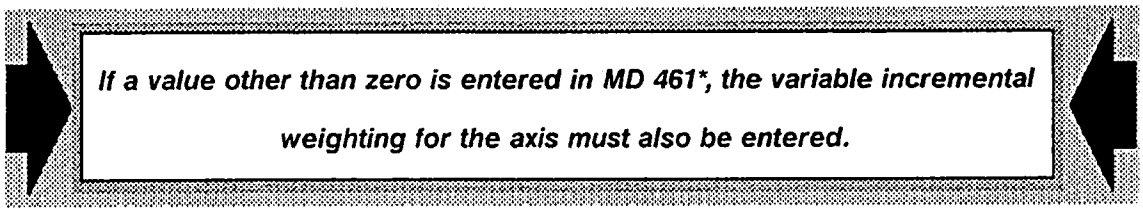

© Siemens AG 1990 All Rights Reserved

12.5.7 Possible configurations for the C axis mode

The machine data listed below must be entered for configuring the interfaces and for format interfacing between actual value, internal computing resolution and setpoint. A more detailed description of this machine data will be found in Section 4 and the Installation Instructions.

- **Machine data for configuring the spindle interface**

MD 400*	Spindle assignment, actual value input and servo CPU
MD 455*	Pulses, variable incremental weighting
MD 456*	Distance traversed, variable incremental weighting
MD 458*	Pulse multiplication for HMS
MD 460*	Spindle assignment, setpoint output
MD 462*	Cutoff frequency of spindle encoder
MD 520*	Configuration bits
MD 521*	Configuration bits

- **Machine data for configuring the C axis interface**

MD 200*	Axis assignment, actual value input and servo CPU
MD 308*	Cutoff frequency of C axis encoder
MD 364*	Pulses, variable incremental weighting
MD 368*	Distance traversed, variable incremental weighting
MD 384*	C axis assignment, setpoint output
MD 564*	Configuration bits (bit 5: axis is rotary axis)
MD 1116*	Pulse multiplication for HMS

The following diagrams give an overview of the possible input/output assignments for the C axis mode. For the configuration with two encoders and two drives the C axis must be declared an independent axis.

© Siemens AG 1990 All Rights Reserved

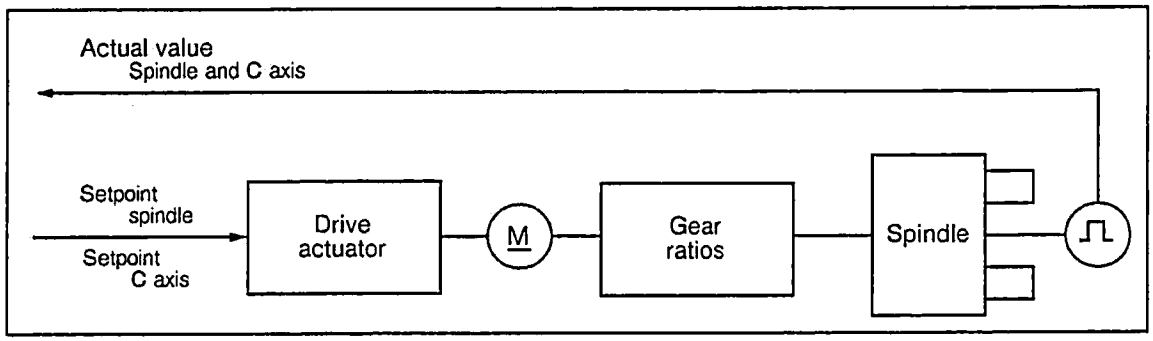

Configuration with one encoder

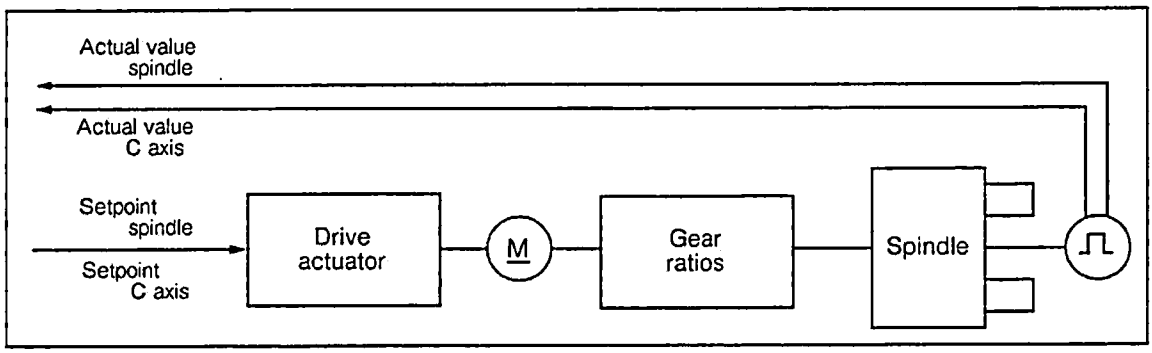

Configuration with two encoders or one double-track encoder

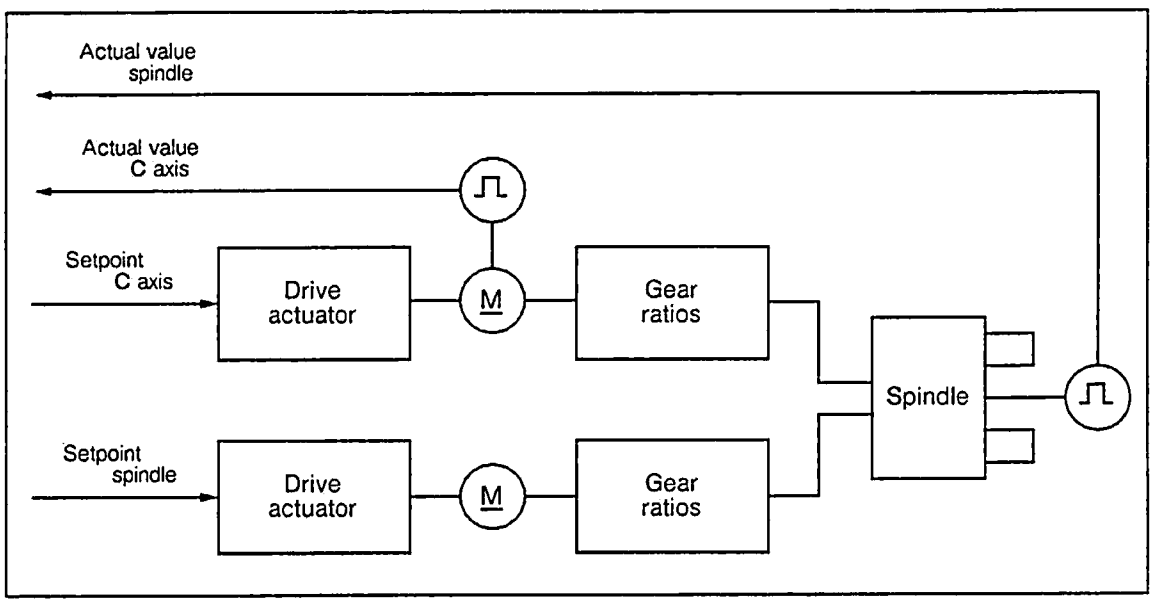

Configuration with two encoders and two drives

© Siemens AG 1990 All Rights Reserved

12.6 SIPOS absolute encoder

12.6.1 Functions

The SIPOS encoder system consists of a multiturn absolute encoder which functions absolutely when switched on and incrementally during operation.

To reduce the dimensions of the encoder, part of the encoder electronics are located on a submodule, the absolute submodule. The absolute submodule is plugged on the HMS measuring circuit module.

After each POWER ON, the control requests the encoder absolute value from the absolute encoder and then calculates the absolute position of the machine. The absolute encoder then functions in exactly the same way as a standard incremental encoder with amplified sine and cosine output signals.

The coded disc information (cyclic absolute) and the value from the battery backed tachometer are taken to determine the absolute information. The buffer battery is located on the absolute submodule and stores the information for up to three axes.

Encoder key data:

Max. sampling frequency:	500 kHz
Increments on disc:	2500
Revolution information::	16 bits
Accuracy on POWER ON:	1 µm at a 10 mm spindle pitch (10000 incr./rev)
Error information:	8 bits
Battery back-up:	5800 hours for 3 encoders, built in battery monitoring

Even during operation, the back-up battery level is checked every 10 minutes and a message displayed on the control if a fault occurs.

If an additional back-up battery is installed in the encoder, the measuring circuit module and the encoder cable can be replaced without loss of absolute information. This battery back-up lasts for up to 5 hours.

12.6.2 Hardware requirements

The absolute encoder submodule is plugged onto the HMS measuring circuit in the same way as conventional servo command modules.

The absolute encoder submodule is equipped with its own type 8096 processor which determines the values for up to 3 axes.

The absolute encoder back-up battery which is also for up to 3 axes, is located on the absolute submodule.

The SIPOS absolute encoder can only be used in conjunction with the new HMS measuring circuit module (high-resolution measuring system).

© Siemens AG 1990 All Rights Reserved

12.6.3 Synchronizing the absolute encoder with the machine absolute system

After installation or after replacing the absolute encoder, the measuring system must be synchronized with the machine system in the same way as with any incremental system. The absolute encoder is set up with the following NC machine data.

- **Axial machine data**

  NC MD 240* reference point value
  NC MD 396* absolute offset

- **Machine data bits:**

  NC MD 1808* bit 0 = 1 axis with SIPOS absolute encoder
  bit 2 = 0 absolute encoder same direction as the machine system
  1 absolute encoder opposite direction to machine system
  bit 3 = 0 absolute offset not valid
  bit 3 = 1 absolute offset valid

Definition of terms:

Same direction:	The absolute encoder value rises and falls with the machine absolute value.
Opposite direction:	The absolute encoder value rises as the machine absolute value falls and vice versa.
Direct measuring system:	The absolute encoder is a position measuring system and is connected to the leadscrew, for example.
Indirect measuring system:	The absolute encoder is used to measure position and speed and is therefore connected to the motor.

There are two synchronization methods; these are explained in the following subsections.

12.6.3.1 Synchronization in "Reference point approach" mode

Like any standard encoder, the SIPOS absolute encoder has A and B tracks and a zero pulse.

Similar to the incremental system, the encoder is synchronized with the machine system by combining the zero mark of the encoder with the reference point cam signal.

A distinction can be made between **two cases** by setting NC MD 1808* bit 0 = 1 ("Axis with SIPOS absolute encoder") during reference approach.

© Siemens AG 1990 All Rights Reserved

Case 1: NC MD 1808* bit 3 = 0

If the bit "Absolute offset valid" is not set, reference point approach is executed as for an axis without absolute encoder. With "Reference point reached", the calculated absolute offset is transferred to the axial NC MD 396* and NC MD 1808* bit 3 "absolute offset valid" is automatically set for the axis relevant axis.

The absolute offset is calculated according to the following equation:

Machine system = SIPOS absolute encoder value + absolute offset

Absolute offset = machine system - SIPOS absolute encoder value

Where:

- Machine system = desired absolute position = reference point value
- SIPOS absolute encoder value = displayed absolute position (actual value)

Note:

If NC MD 396* has a value other than 0, this value must be taken into account because it is contained in the SIPOS absolute encoder system (= displayed actual value).

Suggestion: Set NC MD 396* before synchronization.

Case 2: NC MD 1808* bit 3 = 1

If bit "Absolute offset valid" is set, reference point approach is suppressed. The condition prevails until the user resets the bit.

In the case of the function G74 "Reference point approach from part program", referencing is not carried out for the second case and processing starts with the following block.

Note:

Reference point approach can be restarted when NC MD 1808* bit 3 has been deleted.

© Siemens AG 1990 All Rights Reserved

12.6.3.2 Setting up without a reference point

Where there is no reference cam, e.g. for reasons of cost.

NC MD 1808* bit 0 = 1 is set, i.e. a SIPOS absolute encoder is installed.

The machine is traversed manually in "JOG" or "incremental" mode to the customer's chosen reference point. The reference point value is entered in NC MD 240*.

Calculating the absolute encoder offset:

Machine system = SIPOS absolute encoder value + absolute offset

Absolute offset = machine system - SIPOS absolute encoder value

Where the following is valid:

- Machine system = desired absolute position = reference point value
- SIPOS absolute encoder value = displayed absolute position (actual value)

Note:

- If NC MD 396* has a value other than 0, this value must be taken into account because it is contained in the SIPOS absolute encoder system (= displayed actual value).

  Suggestion: Set NC MD 396* before synchronization.
- When the SIPOS absolute encoder is set up with reference point approach an overrun control is carried out automatically. An overrun results because the absolute encoder is absolute to $\pm 2^{15}$ revolutions and it cannot be ruled out that on setup an overrun of 0 to 2^{15} revolutions from the zero position will occur.
- When setting up without a reference point the customer must carry out the overrun control. All absolute values used must then have the format ± 99999999 input units.
- If a value larger or smaller than ± 99999999 input units results from the calculation of the absolute offset by the machine system - SIPOS absolute encoder value, it must be corrected as follows:

  Absolute offset > 99999999: → Absolute offset - 199999999
  Absolute offset <-99999999: → Absolute offset +199999999

Example:

a) Calculated absolute offset = 130000000
   → correction: absolute offset = 130000000 - 199999999 = - 69999999

b) Calculated absolute offset = - 130000000
   → correction: absolute offset = - 130000000 + 199999999 = +69999999

© Siemens AG 1990 All Rights Reserved

12.6.4 What happens on warm restart (POWER ON)

When NC MD 1808* bit 0 "Axis with absolute encoder" is set, NC MD 1808* bit 3 "Absolute offset valid" is checked for the relevant bits. If both bits are set, the axis-specific interface signal "Reference point reached" is set on warm restart.

12.6.5 Special case "Parking axis"

The axis-specific interface signal "Parking axis" deletes the signal "Reference point reached" even for an axis with a SIPOS absolute encoder. If NC MD 1808* bit 3 is set, referencing is again suppressed. Not until a renewed POWER ON is the absolute value again transferred.

12.6.6 Absolute encoder error

The absolute encoder errors are displayed axis-specifically in the control with the error message "Absolute encoder defective".

The exact type of error is displayed in the "Service number" line in the Service status display menu. The error number is displayed.

Error numbers are explained in the section "Absolute encoder errors".

Note:

- When the absolute encoder is **first switched on**, various absolute encoder numbers are displayed for a period of approx. 10 minutes. This is caused by the back-up battery of the absolute encoder which only establishes error-free communication with the control after a certain charge time.
- All absolute encoder errors are transmitted from the absolute encoder to the control on start-up. It is not possible to acknowledge the absolute encoder errors (e.g. using the reset key). The control can only be informed that the error has been eliminated after a renewed POWER ON.

© Siemens AG 1990 All Rights Reserved

12.6.7 Comments

- NC MD 1808* bit 3: - Software limit switch and leadscrew error compensation are enabled.
  - The leadscrew error between the reference point and the absolute position are included in the calculation.
- Reference point approach with a SIPOS absolute encoder is only possible when NC MD 1808* bit 3 has been reset.
- Information as to whether the SIPOS absolute encoder is in the same or opposite direction as the machine system is required by the control for calculating the absolute value without reference point approach. Once the SIPOS absolute encoder has been synchronized it is very easy to determine the direction of the SIPOS absolute encoder. This is done by traversing the axis concerned to any desired position and starting up the control.

  If, after setting up, positive approach and POWER ON, a larger absolute encoder value is displayed, the system is in the same direction and does not have to be corrected. If a smaller absolute encoder value is displayed, NC MD 1808* bit 2 = 1 must be set. The correct position is then displayed after the next POWER ON.
- If the mechanical traverse direction is changed with NC MD 564*, NC MD 1808* bit 2 must also be adapted correspondingly.

© Siemens AG 1990 All Rights Reserved

12.6.8 Absolute encoder errors

With SIPOS, errors can occur in the encoder as well as in the absolute submodule located on the HMS measuring circuit module.

Please note that a faulty connection between the encoder and the absolute submodule can trigger nearly all the error messages because it is along this connection that communication takes place. This transmission line should therefore always be checked first when an error occurs.

The following is a list of all possible error numbers together with the possible cause of error provided that the connection between the encoder and the absolute submodule is not faulty:

Error No.:	**1-50, 93-195, 240-253**
Meaning: Remedy:	Absolute encoder and/or absolute submodule faulty. – Check whether absolute encoder and absolute submodule are damaged. – Check that connectors are firmly in position.
Error No.:	**51-70**
Meaning: Remedy:	Absolute submodule and/or connection between absolute submodule and measuring circuit faulty – Check whether absolute submodule is damaged. – Check that connector between measuring circuit and absolute submodule is firmly in position.
Error No.:	**71-80, 200-230**
Meaning: Remedy:	Absolute submodule faulty/discharge battery (after 10 min. "battery alarm" appears) – Check whether absolute submodule is damaged – Check that encoder connector is firmly in position.
Error No.:	**81-86**
Meaning: Remedy:	Connection between absolute submodule and measuring circuit faulty – Check whether absolute submodule is damaged. – Check that connector between measuring circuit and absolute submodule is firmly in position.

Note:

When sending in faulty components for repair, always state the error no.

© Siemens AG 1990 All Rights Reserved

12.7 Fast block change with FIFO function

Corresponding data

- NC MD 5186 bit 4 must be set
- NC MD 9140 bit 0 FIFO active in channel
  9141 bit 0
  9142 bit 0
  9143 bit 0

Description of function

When part programs with short traversing blocks are processed, sudden drops in feedrate can occur because the time taken by the block preparation function to process the short traversing blocks is longer than the time taken to execute these blocks. The block change time (block preparation + block transfer) is too long in such a case.

A shorter block change time results if processing is carried out with the FIFO function.

A block buffer (FIFO memory) is first filled after NC START or by programming G171.

The next part program blocks are temporarily stored in this FIFO memory in a prepared state (predecoded). Only when the memory is full with such preprocessed blocks is the program started or continued.

The NC can now acecss the prepared blocks in the FIFO memory and process them in quick succession.

If the NC occasionally processes a block with a longer traversing path or with auxiliary functions, there is time to replenish the FIFO (filling FIFO in background).

It can however happen during a long part program section with short traversing blocks that there is no spare time available to replenish the FIFO memory. As soon as the supply of predecoded blocks in the FIFO memory is exhausted a feedrate drop again occurs.

Filling the FIFO memory with G171

To avoid a drop in the feedrate at an important section of the program, it is possible to fill the FIFO memory selectively before such a program section occurs. Selective filling is initiated by programming G171 in the part program.

This ensures that the following program section from the FIFO memory can be executed with short block change times.

By programming G171, the following occurs in this order:

- Processing stopped
- FIFO memory filled up
- Execution continued

Execution is stopped until the FIFO memory is full or up to a block with M02/30 or up to @714 or up to a block which generates a @714 (setting data block).

It only makes sense to program G171 in AUTOMATIC mode.

© Siemens AG 1990 All Rights Reserved

Behaviour on "Program hold"

If a part program is stopped and edited during execution, the blocks already in the FIFO memory are no longer changed. On NC START these blocks are traversed in their original condition.

Note:

If the tool offset and zero offset values are altered in the stop state, the changes are included the blocks already in the FIFO memory.

FIFO memory size

The NC CPU has a FIFO memory which can hold up to 60 blocks. This total memory can be divided amongst the individual channels with NC MD 558* bit 1.

The following then applies:

FIFO active in one channel:	60 FIFO blocks available in the channel
FIFO active in two channels:	30 FIFO blocks per channel available.

The FIFO function cannot be activated in more than 2 NC CPU channels. If a FIFO buffer is activated for a channel which does not exist, it is ignored.

12.8 Extended thread package

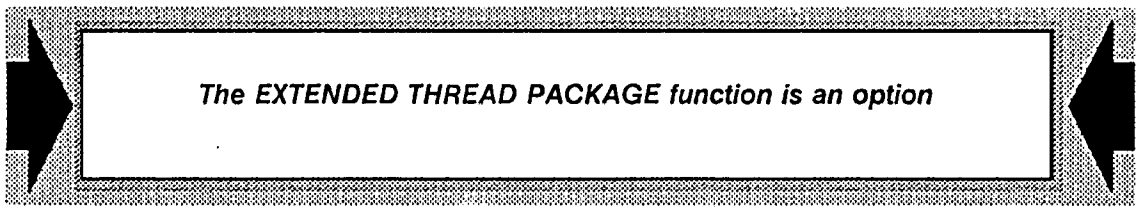

The EXTENDED THREAD PACKAGE consists of several individual functions:

- Following error compensation
- Multi-turn thread
- Thread recutting

12.8.1 Following error compensation with thread cutting

With this function, the following error of the cutting axis, which in thread cutting varies with the spindle speed, is compensated.

The start angle is corrected by the following error calculated from the spindle speed and the revolutional feedrate.

This makes it possible to cut a thread in several passes at different speeds without following error offset. This compensation can only be used, however, for a thread with a constant lead (G33).

© Siemens AG 1990 All Rights Reserved

Prerequisites:

- The EXTENDED THREAD PACKAGE must be available.
- The servo gain factors must be the same for all the axes involved in the thread cutting.
- The input value for the servo gain factor (NC MD 252*) must not be less than 200.

Activating the function

If all the above conditions are fulfilled, no further operations have to be carried out.

The speed should be constant within one cut because deviations from the ideal curve are unavoidable on account of the prevailing dynamic characteristics.

If compensation is not possible, the alarm 3089 "Servo gain factor for thread too small" is given.

Multi-turn thread

A multi-turn, constant thread can easily be cut with this function.

Prerequisite:

- EXTENDED THREAD PACKAGE option must be available.

Description of function

When producing a multi-turn thread, a separate start angle must be programmed directly in the part program via G92 A.. for each thread turn. The start angle refers to the spindle encoder zero mark (incl. zero mark offsets) and can be entered as a value between 0 and 359.999 degrees. Angles above 360 degrees or below 0 degrees are calculated modulo 360.

The last angle to be entered is retained at POWER OFF. The start angle can also be entered directly in setting data 204* of the spindle data or via R parameters.

Example:

Three-turn thread (each displaced by 120 degrees)

G01 G90 X50 S200 M3 LF	Starting point
G92 A0 X100 LF	1st thread turn (0 degrees)
:	
X50 LF	Starting point
G92 A120 X100 LF	2nd thread turn (120 degrees)
:	
X50 LF	Starting point
G92 A240 X100 LF	3rd thread turn (240 degrees)
:	

Setting up thread recutting

With this function, an existing thread on a workpiece can be recut with a constant lead (G33).

Prerequisite:

- EXTENDED THREAD PACKAGE option must be available.

© Siemens AG 1990 All Rights Reserved

Applying the function

The workpiece with the thread must be chucked. The tool tip must be positioned exactly above the root of the thread in JOG/INC mode (any position on the thread).

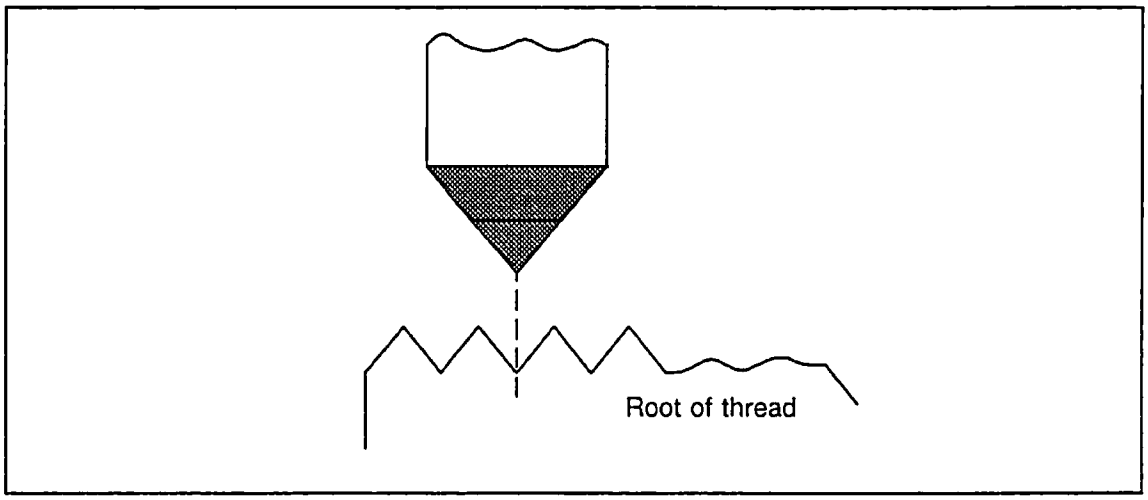

The SETUP THREAD RECUTTING display appears on the screen when the "RECUT THREAD" softkey is pressed.

The offset angle must be entered in the control by pressing the "STORE POSITION" softkey. The previous offset angle and any start angle stored in the control are deleted. The new offset angle is calculated and entered on the first thread block of the part program.

The offset angle is a kind of "spindle zero mark offset" which has become necessary because the workpiece is probably not still chucked in the same angular position as it was for the first thread cutting action.

The offset angle is deleted at POWER ON and by pressing the "DELETE OFFSET" softkey.

© Siemens AG 1990 All Rights Reserved

13 Axis Service Data

Drive optimization and error diagnostics require knowledge of the data transferred by the NC to the axes and spindles and of the data which the axes and spindles transfer to the NC.

The following axis service data is displayed on the monitor:

- Following error in position control resolution (1 unit = 2 position control resolution)
  Difference between setpoint and absolute actual value.

- Absolute actual value in units (MS)
  Actual position of the axes on the machine.

- Setpoint in units (MS)
  The value which the control computes from the programmed value or from the setpoint position input by the operator. Setpoint and absolute actual value are normally identical. At zero speed, the difference (the following error) can be equalized via drift compensation.

- Setpoint speed in VELO
  Digital value computed by the control (for maximum value see NC MD 268*). This value is converted to an analog value (0 V to 10 V) on the measuring-circuit module and output to the drive as setpoint speed.

- Part actual value in units (MS)
  Pulses per interpolation cycle from the measuring system (16 ms standard).

- Part setpoint in units (MS)
  Part setpoints per interpolation time transmitted to the position control system from the interpolator (16 ms standard).

- Contour monitoring
  This value represents the current contour deviation (variations in the following error caused by adjustments on the speed controller due to load changes).

The Service values are displayed as doubled values, i.e. in units (MS) of position control resolution (for example, a following error display of 2000 with a position control resolution of 0.5 µm computes to an actual following error of 1000 µm).

© Siemens AG 1990 All Rights Reserved

13.1 Service numbers

The service numbers that appear in the diagnostics displays for axes and spindles are to facilitate fault-finding. The numbers are grouped as follows:

- Service numbers in the axis diagnostic display:
  - 000 to 299: Absolute encoder/absolute submodule error

The meanings of these service numbers are described in the Function Manual "Integrated Drive Control".

- Service numbers in spindle/axis diagnostics display
  - 600 to 699: Spindle and axis parameterization errors

The meanings of the individual service numbers and notes on fault rectification are listed in the table below.

Number	Meaning	[2]	Remedy	
		General	Axis	Spindle
	Spindle/axis parameterization error			
600	Incorrect pulse multiplication factor for HMS. Only the values 1, 2, 4, 8, 16, 32, 64 or 128 are possible		MD 1116* MD 1204*	MD 458*
601	Incorrect total position controller clock pulse. Incorrect ratio position control/interpolator clock pulse is displayed for all axes/spindles	MD 155 MD 160 -163 MD 168		
602	Incorrect axis/spindle position controller clock pulse Position controller/interpolator clock pulse must be whole numbers		MD 1396*	MD 466*
603	Incorrect incremental weighting Corresponding MD too large or too small (0) (internal format overflow)		MD 368* MD 368* MD 1208* MD 1212*	MD 455*, MD 456*, MD 524*
604	Servo gain factor too small or too large (0) (internal format overflow)		MD 260* MD 252*	MD 435*- 442
605	Threshold for drive errors = 0 [1]		MD 264*	
606	Max. speed setpoint = 0 [1]		MD 268*	
607	Not assigned at the moment			
608	Not assigned at the moment			
609	Setpoint assignment error DAC module, measuring circuit 214		MD 384*	MD 460*
610	Error on actual value assignment HMS, measuring circuit 214		MD 200* MD 1388*	MD 400*

[1] Only applies where C axis is a spindle.
[2] General MD only apply to SIN 880. For SIN 840, the relevant general MD must be set.

© Siemens AG 1990 All Rights Reserved

Number	Meaning	[2] Remedy		
		General	Axis	Spindle
612	Incorrect clock cycle setting permissible values are 1, 2, 4, 8, 16 displayed for all axes/spindles	MD 168*		
613	Not assigned at the moment			
614	Not assigned at the moment			
615	Entered position control resolution not valid [1]		MD 1800*	MD 524*
616	Not assigned at the moment			
617	Not assigned at the moment			
618	Assigned axis is not a rotary axis			MD 564*, Bit
619	Overflow when converting synchronous position into measuring system resolution			MD 463*
620	Incorrect C axis assignment: Selected C axis does not exist Selected C axis not on same SERVO CPU as spindle No spindle encoder available C axis no. changed on line		 MD 200*	MD 461* MD 564*, Bit MD 400* MD 400* MD 520*, Bit MD 461*
621	Pulse weighting too high (internal format overflow)			MD 455*
622	Traverse weighting too high (internal format overflow)			MD 456*
623	Speed conversion incorrect; Counter or denominator = 0; (internal format overflow)			MD 455* MD 456* MD 524*
624	Incorrect encoder gearbox; modulo calculation for one revolution not possible as no whole number could be determined			MD 455* MD 456* MD 524*
625	Conversion from spindle encoder to C axis resolution not possible		MD 364* MD 368* MD 1800*	MD 455* MD 456* MD 524*
626	DAC factor too large or too small			MD 468*

[1] Only applies where C axis is a spindle.
[2] General MD only apply to SIN 880. For SIN 840, the relevant general MD must be set.

© Siemens AG 1990 All Rights Reserved

Number	Meaning	[2] Remedy		
		General	Axis	Spindle
627	C axis position controller sampling time not the same as the spindle position controller sampling time Enter the same position controller sampling times!		MD 1396*	MD 466*
629	The acceleration calculated from the max. speed, acceleration time constant and interpolator clock pulse parameters is not permitted (< = 0)!	MD 155		MD 403*-410 MD 419*-426 MD 478*-485
630	Overflow possible when calculating deceleration distance/distance to go for positioning from full speed!	MD 155		MD 403*-410 MD 478*-485 MD 455* MD 456* MD 524*
631	Overflow when converting zero mark shift in measuring system resolution			MD 459* MD 455* MD 456* MD 524*

[2] General MD apply to SIN 880 only. For SIN 840, the relevant general MD must be set.

© Siemens AG 1990 All Rights Reserved

Selecting the service data

Data area

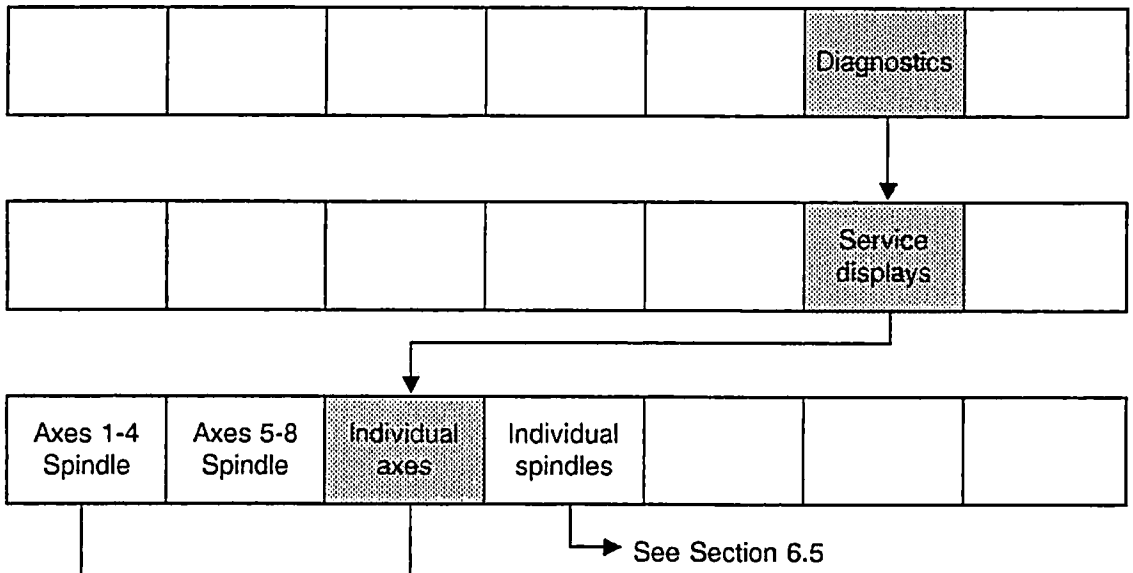

Service data for individual axes Axis 1 (1-8)

- Following error
- Absolute actual value
- Absolute setpoint
- Setpoint speed (VELO)
- Partial actual value
- Partial setpoint
- Contour deviation
- Service no.

Service data for axes and spindles

Axis	1	2	3	4
Following error Absolute actual value Absolute setpoint Setpoint speed (VELO) Partial actual value Partial setpoint Contour deviation				
Spindel		1	2	
Setpoint speed (VELO) Progr. setpoint speed (rev/min) Current setpoint speed (rev/min) Actual speed value (rev/min) Setpoint position (degrees) Actual position (degrees) Following error (degrees) Override % Current gear ratio Service no.				

© Siemens AG 1990 All Rights Reserved

The on-screen display for individual axes or spindles is updated more frequently than that for several axes or spindles. The individual display option should be selected when a more accurate check is necessary.

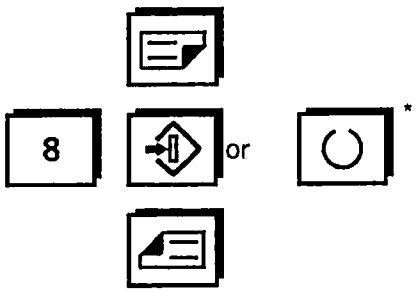

Proceed to the next axis display by pressing the "Page/down" key.

Axis 8, for example, can be selected directly by entering the digit "8" and pressing the Search key.

Preceding axes can be screened by pressing the "Page Up" key.

13.2 Spindle service data

The current spindle values can be viewed on the screen to allow optimization and error diagnostics.

- Setpoint speed (VELO):
  Digital voltage output by the NC on the measuring circuit
- Setpoint speed (rev/min):
  User-specified value
  e.g.: Entry S 1000 Display: Setpoint speed 1000 (rev/min)
- Actual speed (rev/min):
  The pulses from the spindle encoder are evaluated by the NC and displayed as speed in units of rev/min
- Setpoint position:
  The NC converts the spindle position specified by the user from degrees into the corresponding number of pulses;

  e.g.: 0° = 0
  180° = 2048
  359° = 4095
- Actual position:
  The pulses from the spindle encoder are evaluated by the NC and subsequently displayed; for example, in the case of 1024 pulses, the spindle position is 90°.
- Following error:
  Difference between the setpoint position and the actual position. At zero speed, the following error is a gauge for the positional deviation when M19 is active.
- Override:
  The position of the spindle override switch is displayed.
- Gear ratio:
  The current gear ratio is displayed (DB 31 DR K + 1, bits 0 to 2).

* 10" SINUMERIK slimline operator panel

© Siemens AG 1990 All Rights Reserved

Select spindle service data

The service data can be viewed on the screen by pressing the Diagnostics, then the Service Data Display softkey. For details, see Section 5.4

Service spindle single display	**spindle 1 (1-4)**
Speed set value	(VELO)
Prog. setpoint speed	(rev/min)
Current setpoint speed	(rev/min)
Actual speed value	(rev/min)
Setpoint position	(degrees)
Actual position	(degrees)
Following error	(degrees)
Override	%
Current gear ratio	
Service no.	

Page to the next spindles with the "Page Down" key.

Spindle 4, for example, can be selected directly by entering the digit "4" and pressing the Search key.

The data for the preceding spindle can be screened with the "Page Up" key.

* 10" SINUMERIK slimline operator panel

© Siemens AG 1990 All Rights Reserved

14 Monitoring

14.1 Alarm messages

14.1.1 Alarm groups

The alarms are categorized into three alarm groups.

NC alarms

- General alarms
- RS232C (V.24) alarms
- Axis-specific alarms
- Spindle-specific alarms

On POWER ON RESET (switching on control) all NC alarms are cancelled.

PLC alarms

- PLC error messages
- PLC operational messages

PLC machine data must be used to determine whether the alarms 6000 to 9999 are displayed as error messages, as operational messages, or not at all.

Cycle alarms

© Siemens AG 1990 All Rights Reserved

14.1.2 Alarm numbers/cancellation of alarms

Alarm number	Kind of alarm	Alarm is cancelled by
1	General alarms	Pressing the "Acknowledgement" key
2 to 15	General alarms	POWER ON
16 to 36	RS232C alarms	Selecting 1. Pressing the "Data area" key 2. "Data I/O" softkey 3. "Stop" softkey
43 to 95	General alarms	POWER ON
1000 to 1211 1240 to 1251	Axis-specific alarms	Pressing the "Reset" key
1280 to 1371	Axis-specific alarms	POWER ON
1440 to 1971	Axis-specific alarms	Pressing the "Reset" key
2000 to 2193	General alarms	Pressing the "Reset" key
2250 to 2263	Spindle-specific alarms	Pressing the "Reset" key
2270 to 2273	Spindle-specific alarms	POWER ON
2280 to 2283	Spindle-specific alarms	Pressing the "Reset" key
3000 to 3220	General alarms	Pressing the "Acknowledgement" key
4000 to 4299 5000 to 5299	Cycle alarms	Pressing the "Acknowledgement" key
6000 to 9999	PLC error messages or PLC operational messages	Pressing the "Acknowledgement" key
10000 to 12031	Axis-specific alarms	POWER ON or pressing the "Reset" key
20000 to 20309	Spindle-specific alarms	POWER ON or pressing the "Reset" key

POWER ON means switching the control off and on again. Please note the information supplied by the machine tool manufacturer.

© Siemens AG 1990 All Rights Reserved

Effects of cancelling the alarms

Key	Effects of pressing the key
Acknowledgement	A current NC program is **not** terminated but only stopped. After eliminating the error, it is possible to continue execution of the NC program from the point at which it was stopped.
Reset	Execution of the current NC program is terminated. After eliminating the error, the NC program must be **restarted.**
POWER ON	Execution of the current NC program is terminated. After eliminating the error, the NC program must be **restarted** and the reference points must be **reapproached.**

14.1.3 Display of the alarms

Messages from the monitoring system are displayed in the ***alarm line*** of the CRT. Existing comments are overwritten by alarm texts. The ***alarm line*** is the second display line from the top.

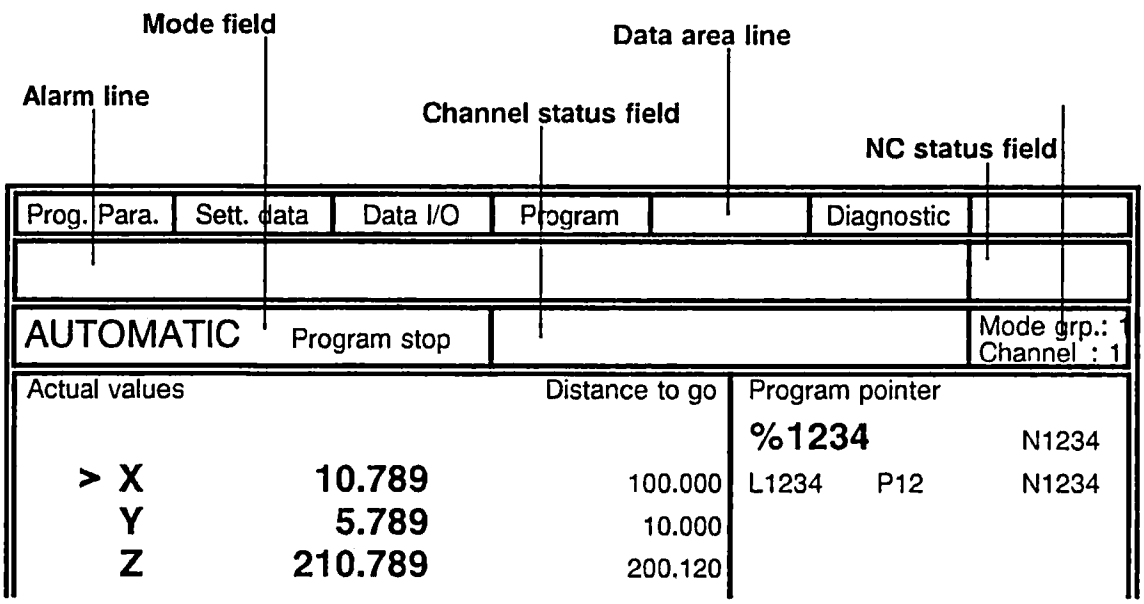

There are three types of display representation for alarm messages: Types A, B and C.

© Siemens AG 1990 All Rights Reserved

- ***Example of display representation Type A:*** Alarm display in sequence order

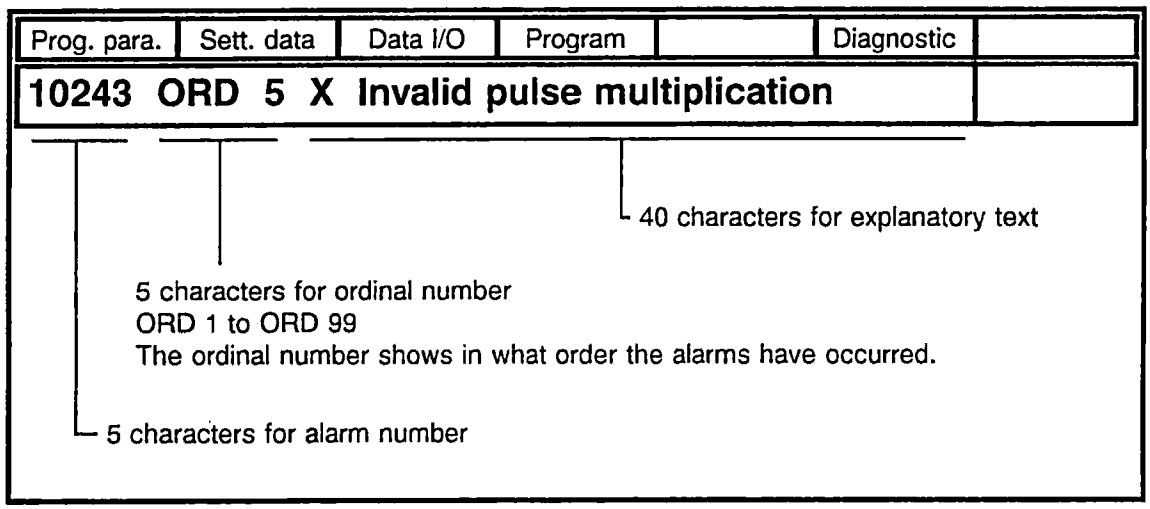

- **Example of display representation Type B:** Alarm display in block number order

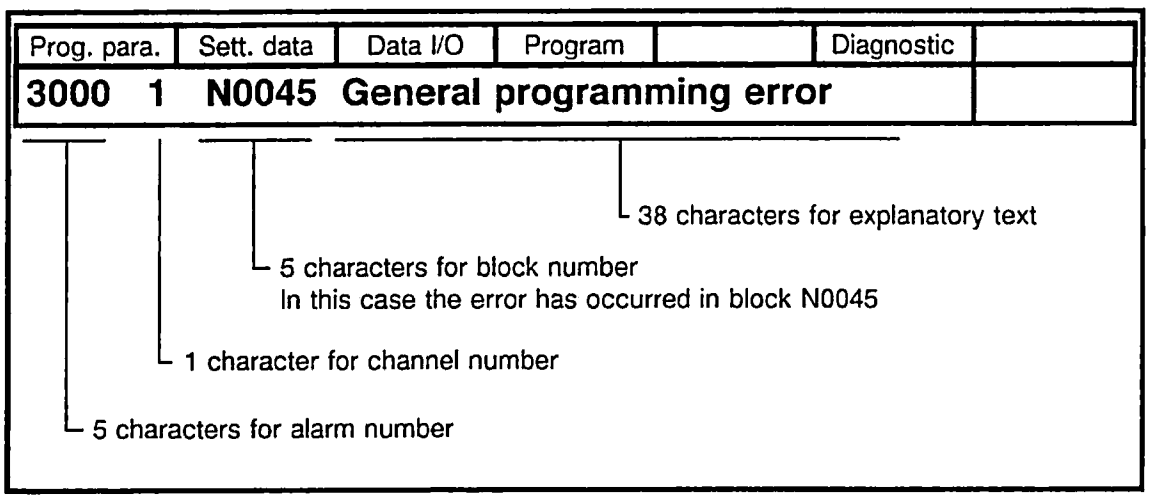

- **Example of display representation Type C:** Valid for alarm numbers 6000 to 9999 (PLC error messages and PLC operational messages)

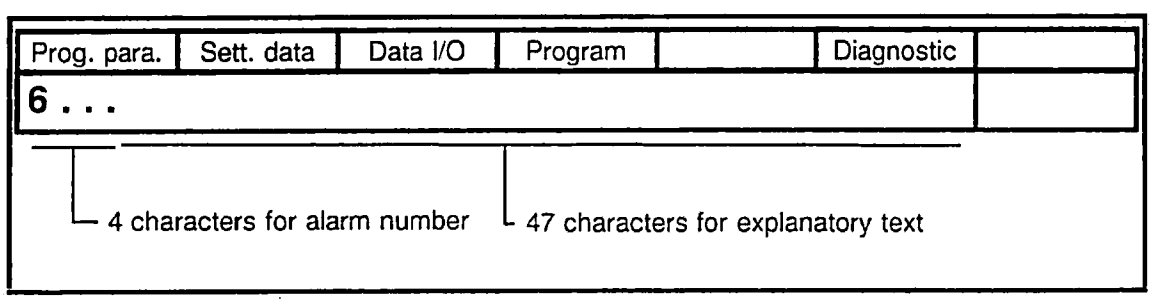

© Siemens AG 1990 All Rights Reserved

14.1.4 Priority of alarms

Only one alarm can be displayed in the alarm line and the following priorities apply:

Priority	Description
1	NC alarms
2	PLC error messages
3	PLC operational messages
4	Cycle alarms
5	Commentary texts

Within the alarm groups, the priority is in accordance with the alarm number, i.e. the lowest alarm number has the highest priority.

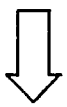

An arrow to the right of the alarm line indicates that further alarms exist. These alarms are displayed if you press the appropriate softkey in the "Diagnostics" data area.

4.1.5 Alarm description

The alarms are described in a form of uniform layout. The header of each alarm description gives information on the alarm number, the alarm text and means of cancellation.

Alarm number	Alarm text	Means of canc.
Scan:	*Indicates in which state the alarm occurs.*	
Effect:	*Indicates the effect of execution.*	
Explanation:	*Indicates reasons for the alarm appearing.*	
Remedy:	*Information for eliminating the alarm state.*	

© Siemens AG 1990 All Rights Reserved

1	Battery alarm power supply	
Scan:	• On POWER ON • Cyclic	
Effect:	The control must not be switched off before the battery has been replaced, or data will be lost.	
Explanation:	The battery voltage has dropped below the threshold of 2.8 V, so that back-up of data (of the part program memory, for example) is no longer guaranteed if the control is switched off.	
Remedy:	Replace the battery in the power pack (plug-in unit) under power and then cancel the alarm. Normal battery voltage is 3.6 V.	

4	System of units illegal	POWER ON
Scan:	• On POWER ON • After modification of NC machine data	
Effect:	• Interlocking of NC READY • Interlocking of NC START • Interlocking of mode group READY • Machining stop	
Explanation:	An illegal combination of machine data MD 18000 display resolution and MD5002 input resolution has been selected. Both data must use the same system of units.	
Remedy:	Check and correct machine data combinations. Then cancel the alarm with POWER ON.	

© Siemens AG 1990 All Rights Reserved

8	Wrong axis/spindle assignment	POWER ON
Scan:	• After modification of machine data • On POWER ON	
Effect:	• Interlocking of NC START • Removal of mode group READY • NC READY relay drops out • Machining stops	
Explanation:	The NC machine data for axis assignment MD200* or spindle assignment MD400* have been input incorrectly or transposed. If error in MD 461* C axis definition	
Remedy:	Check and correct machine data for axis and spindle assignment. Cancel alarm with POWER ON.	

9	Not enough memory for UMS	POWER ON
Scan:	• On POWER ON in normal mode, not in start-up mode	
Effect:		
Explanation:	The RAM area reserved on the NC is too small for the UMS address lists for the modified system area.	
Remedy:	Describe fewer elements (displays/texts) in modified system area (merge). A larger RAM area must be defined for the NC (new software).	

10	Standard UMS fault	POWER ON
Scan:	• On POWER ON	
Effect:	• Interlocking of NC START	
Explanation:	The standard UMS EPROMs in the system software have been corrupted, or the EPROMs have been wrongly programmed on system creation.	
Remedy:	Change system software; it is not possible to change a single EPROM.	

© Siemens AG 1990 All Rights Reserved

16	RS232C (V.24) parity error
Scan:	• On reading data into the NC via the RS232C (V.24) interface
Effect:	• RS232C (V.24) transmission interrupted • Last block declared invalid
Explanation:	The alarm can only arise if the setting data "With parity bit" applies. The character commenced (8 data and 1 parity bit) has the wrong parity. This alarm has nothing to do with the character parity error RS232C (V.24) in ISO or EIA punched tapes (alarm 23).
Remedy:	• Check setting data "Transmission format input/output", "Device coding" and "EIA code for @ and :" • Test external device The alarm is displayed in block order, i.e. the number of the faulty block is displayed.

17	RS232C (V.24) overflow error
Scan:	• On reading data into the NC via the RS232C (V.24) interface
Effect:	• RS232C (V.24) transmission interrupted • Last block declared invalid
Explanation:	The external device has sent a new character although the NC has not yet processed the old one.
Remedy:	• Check setting data "Transmission format input/output", "Device coding" and "EIA code for @ and :" • Test external device • Number of faulty block is displayed

18	RS232C (V.24) stop bit error
Scan:	• On reading data into the NC via the RS232C (V.24) interface
Effect:	• RS232C (V.24) transmission interrupted • Last block declared invalid
Explanation:	• The number of stop bits is incorrect • Wrong baud rate
Remedy:	• Check setting data "Transmission format input/output", "Device coding" and "EIA code for @ and :" • Test external device • Number of faulty block is displayed

© Siemens AG 1990 All Rights Reserved

19	RS232C (V.24) external unit not READY
Scan:	• On requesting data via the NC RS232C (V.24) interface
Effect:	No files are read in
Explanation:	The "DSR" signal from the external device is LOW
Remedy:	• Start external device manually • Do not use DSR

22	Do not use DSR
Scan:	• After a request by the NC to output or read in data, with a delay of longer than 60 sec.
Effect:	No data are received or output
Explanation:	The NC cannot output characters for 60 sec. • The external device blocks the CTS (clear to send) signal for longer than 60 sec. • The external device does not send DC1 within 60 sec. when control signals (DC1 to DC4) are used. The NC has not received any characters for 60 sec.
Remedy:	• Check external device and switch on • Check cable and plug in

23	RS232C (V.24) character parity error
Scan:	• On reading data into the NC via the RS232C (V.24) interface
Effect:	• RS232C (V.24) interface transmission interrupted • Last block declared invalid
Explanation:	Depending on the definition of the start of program, "%" or "EOB", the NC automatically establishes the ISO or EIA code upon receipt of this character and thus establishes the character parity. When checking the following characters, it was established that one character did not have the set parity.
Remedy:	Check punched tape or data format output of the connected data unit. The number of the faulty block is displayed.

© Siemens AG 1990 All Rights Reserved

24	RS232C (V.24) irrelevant EIA character
Scan:	• On reading data into the NC via the RS232C (V.24) interface
Effect:	• RS232C (V.24) transmission interrupted • Last block declared invalid
Explanation:	An EIA character with the correct parity was read in but the character was not defined in EIA code.
Remedy:	• Check punched tape • Check setting data EIA code for @ and: The number of the faulty block is displayed.

26	RS232C part program block >120 char.
Scan:	• On reading data into the NC via the RS232C (V.24) interface
Effect:	• RS 232 C (V.24) transmission interrupted • Last block declared invalid
Explanation:	The part program block that has been read in contains more than 120 characters. Only the characters actually stored are counted (no spaces, no CR, etc.)
Remedy:	Divide the block into two or more blocks. The number of the faulty block is displayed.

27	RS232C (V.24) data input disabled
Scan:	• On reading data into the NC via the RS232C (V.24) interface
Effect:	No data has been read in
Explanation:	• The "Cycle lock" interface signal (DB 48 D0.11) is present • An attempt has been made to read in NC machine data in normal mode • An attempt has been made to transfer UMS data to the NC although the UMS was not enabled or not plugged in
Remedy:	• Reset DB 48 DW 0 bit 11 via PLC STATUS • Enter new NC machine data • Plug in UMS module and equip with UMS submodules, or enable the UMS via machine data

© Siemens AG 1990 All Rights Reserved

28	RS232C (V.24) circular buffer overflow
Scan:	• On reading data into the NC via the RS232C (V.24) interface
Effect:	• RS232C (V.24) transmission interrupted • Last block declared invalid
Explanation:	The transmission rate is so high that more characters are read in than can be processed by the NC
Remedy:	• RTS signal has no effect on the input device (RTS causes the input device to STOP) • Transmission rate (baud rate) too high • Use RS 232 C (V.24) transmission instead of 20 mA

29	RS232C (V.24) block >254 characters
Scan:	• On reading tool data into the NC via the RS232C (V.24) interface
Effect:	• RS232C (V.24) transmission interrupted • Last block declared invalid
Explanation:	The block read in has more than 254 characters (counting all characters read in, including blanks, CR, LF, etc.)
Remedy:	Divide the block into two or more blocks. The number of the faulty block is displayed.

30	RS232C part program memory overflow
Scan:	• While reading programs in via the RS232C (V.24) interface of the NC
Effect:	• RS232C (V.24) transmission interrupted • Last block declared invalid
Explanation:	The maximum memory space for part programs is already assigned
Remedy:	• Delete old programs to release memory for the reading in of new programs. The number of the faulty block is displayed.

© Siemens AG 1990 All Rights Reserved

31	RS232C no more part prog. can be input
Scan:	• On reading in via RS232C (V.24) interface
Effect:	No data has been read in
Explanation:	The part program memory available has been used up.
Remedy:	• Read and delete old part programs no longer required in order to provide more memory • Where appropriate use a larger part program memory

32	RS232C (V.24) data format error
Scan:	• On reading data into the NC via the RS232C (V.24) interface
Effect:	• RS232C (V.24) transmission interrupted • Last block declared invalid
Explanation:	• The number of decades used after an address is not permissible • The decimal point occurs in the wrong place • Part programs or subroutines are not defined or concluded correctly (check header)
Remedy:	Check the program to be read in. The number of the faulty block is displayed.

33	RS232C (V.24) programs different
Scan:	• On reading part programs into the NC memory via the RS232C (V.24) interface of the NC
Effect:	No data is read in/stored
Explanation:	If a new program is to be read in with the same program number as one already stored in the NC, the program to be read in is compared. If they are different, an NC alarm occurs. The point of disagreement is shown in the data input display. The new program is not stored.
Remedy:	Delete the old program or rename it in the NC so that the new program can be read in.

© Siemens AG 1990 All Rights Reserved

34	RS232C (V.24) total baud rate too high	
Scan:	When starting an additional RS232C (V.24) interface when the other one is still active	
Effect:	Transmission at selected interface is not started	
Explanation:	RS232C (V.24) transmission at a second interface was attempted at the NC whereas another was already active.	
Remedy:	• Select a lower baud rate or wait unitil the other interface is no longer active • When the interface has completed transmission, lower its baud rate.	

36	UMS memory full RS232C (V.24)	
Scan:	• On data transmission between NC workstation and UMS module	
Effect:	UMS data cannot be processed	
Explanation:	The programmed UMS requires more memory than is available or has been enabled on the RAM cards in the UMS module.	
Remedy:	Plug in a sufficient number of RAM submodules in the UMS module or check the pre-set machine data for enabling of the UMS	

43	PLC CPU failed	POWER ON
Scan:	• Cyclic or on Restart	
Effect:	• Interlocking of "NC START" • Interlocking of "Mode group READY" • Interlocking of "NC READY" relay • Processing is terminated	
Explanation:	• Hardware or software error in PLC or general data interface link • PLC machine data error or not in agreement with user program • Error in the PLC user program • Selection of error fine coding	
Remedy:	• Remove cause of error • Read out I-stack • Ascertain cause of error using the error list in the installation lists	

© Siemens AG 1990 All Rights Reserved

44	Part program memory activated wrong	POWER ON
Scan:	• On POWER ON	
Effect:	Access of part program memory not possible • Interlocking of NC START	
Explanation:	Part program memory structure is not recognized or has been given the wrong area size by machine data	
Remedy:	• Check specification of memory size (machine data) • Clear and format memory	

46	Invalid no. of TO parameters	POWER ON
Scan:	• After altering machine data and then formatting user memory or during runup if MD 13 is not correct.	
Effect:	Function not usable • Interlocking of NC START	
Explanation:	On installation, a value greater than 32 or smaller than 10 is specified for machine data 13, "Number of TO parameters"	
Remedy:	• Correct machine data • Format user memory or, in General Reset mode, format the area for the TO data	

47	Wrong TO allocation lists	POWER ON
Scan:	• On POWER ON after modifying machine data	
Effect:	• Interlocking of NC START	
Explanation:	• Value of machine data 210, "Number of TO areas", is greater than 4 • TO start numbers in NC MD211 to 214 have not been entered in ascending order • Input value in channel-specific NC MD1040 to 1043 is greater than the number of TO areas under MD 210 or is specified as 0 in the TO area	
Remedy:	• Correct machine data • Where appropriate format user memory if machine data were input correctly or format the TO data in General Reset mode • POWER ON	

© Siemens AG 1990 All Rights Reserved

48	Data link to PLC not ready	POWER ON
Scan:	• On starting up or restarting the control	
Effect:	• Interlocking of "NC START" • Interlocking of "NC READY" relay • Interlocking of "Mode group ready" • Machining stops	
Explanation:	During the start-up synchronization or data exchange between interface-CPU (IFC) and PLC CPU an error was established, leading to the alarm. Data exchange between NC and PLC is still possible but the link to the programmer via the interface is not possible.	
Remedy:	Change system software if the alarm is not cancelled automatically. Error fine coding can give information on further error sources; in addition, check whether alarm 43 is present.	

52	Data link to IFC not ready	POWER ON
Scan:	• When switching on the control and starting up • Cyclic monitoring of general data interface link	
Effect:	• Interlocking of "NC READY" relay • Interlocking of "NC START" • Machining stops • Interlocking of "Mode group ready"	
Explanation:	When starting up or in operation, an error was established which causes a stop on synchronization between NC and interface-CPU. On starting up after a synchronization the alarm is cancelled automatically.	
Remedy:	Change system programs, since an error has occurred in the general data interface link, interface synchronization or NC synchronization system parts. Change the interface-CPU because of hardware errors on the module.	

65	Slot wrong	POWER ON
Scan:	• On POWER ON	
Effect:	• Interlocking of "NC START" • Interlocking of "NC READY" relay • Interlocking of "Mode group READY" • Interlocking of machining	
Explanation:	On switching on the control, it was established that a module had been plugged into the wrong bus slot.	
Remedy:	Check module slots and if necessary change modules	

© Siemens AG 1990 All Rights Reserved

67	1st computer link not ready	POWER ON
Scan:	Cyclic or on POWER ON	
Effect:	Message interchange between host computer and NC is not possible	
Explanation:	Host computer and NC are not synchronized owing to an incorrect input or a fault in the interface module. This means that message interchange is not possible.	
Remedy:	• Check programming of interface module • Check machine data settings for computer link • Check whether host computer is READY or connected	

68	2nd computer link not ready	POWER ON
Scan:	Cyclic or on POWER ON	
Effect:	Message interchange between host computer and NC is not possible	
Explanation:	Host computer and NC are not synchronized owing to an incorrect input or a fault in the interface module. This means that message interchange is not possible.	
Remedy:	• Check programming of interface module • Check machine data settings for computer link • Check whether host computer is READY or connected	

70	Define at least one channel	POWER ON
Scan:	• On POWER ON	
Effect:	• Interlocking of NC START • Interlocking of "Mode group READY" • Interlocking of "NC READY" relay • Machining not possible	
Explanation:	On starting up, an incorrect assignment of machine data was made. The NC will not work without channel assignment.	
Remedy:	Check and correct machine data for channel assignment • POWER ON	

© Siemens AG 1990 All Rights Reserved

73	Axis specified in wrong mode group	POWER ON
Scan:	• On POWER ON	
Effect:	• Interlocking of NC START • Interlocking of "Mode group READY" • Interlocking of "NC READY" relay • Machining not possible	
Explanation:	On starting up, an incorrect assignment of NC machine data was made or the assignment of axis selector switch with 2 machine control panels is incorrect or a wrong axis is set in the program.	
Remedy:	Check and correct NC machine data "Axis valid in mode group". • Correct program • POWER ON	

75	Max. number of meas. circ. exceeded	POWER ON
Scan:	• On POWER ON or warm start	
Effect:	• No NC START possible	
Explanation:	Output of alarm if too many axes and spindles are defined.	
Remedy:	Reduce the number of axes (MD 564*) and spindles (MD 512*)	

77	Mode group no. of axis invalid	POWER ON
Scan:	• On POWER ON	
Effect:	• Interlocking of "NC START" • Interlocking of "Mode group READY" • Interlocking of "NC READY" relay • Interlocking of machining	
Explanation:	Check and correct machine data for axis assignment and spindle assignment.	
Remedy:	• Check and correct machine data for "Axis valid in mode group" • POWER ON	

© Siemens AG 1990 All Rights Reserved

78	Mode group no. of spindle invalid	POWER ON
Scan:	• On POWER ON	
Effect:	• Interlocking of "NC START" • Interlocking of "Mode group READY" • Interlocking of "NC READY" relay • Interlocking of machining	
Explanation:	Check and correct machine data for axis assignment and spindle assignment.	
Remedy:	• Check and correct machine data for "Mode group of spindle" • POWER ON	

79	Mode group no. of channel invalid	POWER ON
Scan:	• On POWER ON	
Effect:	• Interlocking of "NC START" • Interlocking of "Mode group READY" • Interlocking of "NC READY" relay • Interlocking of machining	
Explanation:	An incorrect assignment (e.g. gap) has been made in the channel-specific machine data for "Channel valid in mode group".	
Remedy:	• Check machine data • POWER ON	

81	More than two 3D interpolation	POWER ON
Scan:	On each block change	
Effect:	• Interlocking of "NC START" • Interlocking of "NC READY" relay	
Explanation:	The NC is an E version. More than 3 axes (3D interpolation) are programmed in one program block in the NC.	
Remedy:	• Modify program • Cancel alarm by POWER ON	

© Siemens AG 1990 All Rights Reserved

84	Coupled axis grouping wrong	POWER ON
Scan:	• On POWER ON • On warm start	
Effect:	• Interlocking of "NC START" • Interlocking of "Mode group READY" • Interlocking of machining	
Explanation:	An illegal coupled axis grouping has been set for the assignment of coupled axes in machine data, e.g.: • The axes do not belong to the same mode group • The axes have different position control resolutions • The axes are of different types (linear axis/terminal axis) • The axes are not declared to be present • The axes are fictitious • The leading axis is defined as a coupled axis	
Remedy:	Correct machine data using the "Coupled motion" function and perform a warm start (see Start-up Guide).	

85	Coupled axis combination wrong	POWER ON
Scan:	• On POWER ON • On warm start	
Effect:	• Interlocking of "NC START" • Interlocking of "Mode group READY" • Interlocking of machining	
Explanation:	An undefined combination has been input in NC machine data for the coupled axis combination.	
Remedy:	Correct machine data and perform a warm start (see Start-up Guide).	

© Siemens AG 1990 All Rights Reserved

87	Illegal software limit switch	POWER ON
Scan:	• After altering machine data	
Effect:	• Interlocking of "NC START" • Interlocking of "Mode group READY" • Interlocking of machining	
Explanation:	An excessively large value has been entered in the NC machine data for the software limit switch. The maximum traversing range of the individual axes results from the axis-specific position control resolution set and the input resolution. With alarm 87, the control has automatically entered the maximum permissible value in the appropriate NC machine data.	
Remedy:	Check machine data for software limit switch and where appropriate correct.	

88	Interpolation greater than 3D	POWER ON
Scan:	• When executing part programs in AUTOMATIC or MDA	
Effect:	• Interlocking of "NC START" • Interlocking of machining	
Explanation:	More than 3 axes have been programmed in one block in the part program block of the NC, or the "5D" function is not available.	
Remedy:	• Check part program • Divide program block into two separate blocks • Upgrade function option.	

89	More than two 3D interpolations	POWER ON
Scan:	• When executing part program blocks in AUTOMATIC or MDA	
Effect:	• Interlocking of "NC START" • Machining stops	
Explanation:	More than 3 axes have been programmed in each case in one program block in more than 2 channels in the NC.	
Remedy:	• Modify program • Do not execute more than 2 programs at the same time	

© Siemens AG 1990 All Rights Reserved

90	Customer UMS invalid	POWER ON
Scan:	• On POWER ON when UMS bit is set	
Effect:	Interlocking of "NC START" until alarm is acknowledged.	
Explanation:	When reading out standard machine data, meaningless combinations were not read or the programmed customer UMS is larger than the customer UMS area enabled (by machine data).	
Remedy:	Compare machine data enabled with actual UMS length. Check maximum permissible storage area (machine data).	

91	ID number in UMS header wrong	POWER ON
Scan:	• On POWER ON and with activated UMS data	
Effect:	Interlocking of "NC START" until alarm is acknowledged. Standard UMS is declared valid.	
Explanation:	The programmed ID number in the UMS header, which is evaluated by the system software, is incorrect or has been read incorrectly because the UMS submodules were plugged in incorrectly.	
Remedy:	Check the plugging sequence of the UMS cards if more than 1 submodule has been plugged in. It may be that the UMS submodule has to be reprogrammed.	

92	UMS wrongly plugged	POWER ON
Scan:	• On POWER ON and with activated UMS data	
Effect:	• Interlocking of "NC START" until alarm is acknowledged.	
Explanation:	Alarm is output if the UMS memory module has not been plugged in or if some or all of the UMS submodules have not been plugged in.	
Remedy:	Check hardware configuration and plug in all the submodules belonging to the programmed UMS.	

© Siemens AG 1990 All Rights Reserved

93	Wrong UMS selector	POWER ON
Scan:	• On POWER ON and with activated UMS data	
Effect:	• Interlocking of "NC START" until alarm is acknowledged.	
Explanation:	The address lists preset by the NC workstation do not contain the set selectors required for error-free processing of a UMS.	
Remedy:	Check the system software of the NC workstation, or have it checked.	

94	Wrong UMS identifier	POWER ON
Scan:	• On POWER ON and with activated UMS data	
Effect:	• Interlocking of "NC START" until alarm is acknowledged.	
Explanation:	An incorrect identifier is programmed in the UMS.	
Remedy:	Check UMS and NC workstation software.	

95	Wrong number in modified system area	POWER ON
Scan:	• On POWER ON and with activated UMS data	
Effect:	• Interlocking of "NC START" until alarm is acknowledged.	
Explanation:	Numbers have been used in the modified system area which are outside the reserved areas.	
Remedy:	Check the numbers used in the modified system area.	

96	Language not available in UMS	
Scan:	On UMS analysis (POWER ON of controls not during start-up)	
Effect:	UMS is connected in its basic language	
Explanation:	Two-language UMS does not contain the language activated in the control	
Remedy:	Put correct UMS in control	

© Siemens AG 1990 All Rights Reserved

100*	Compen. grid spacing invalid	POWER ON
Scan:	• After "POWER ON"	
Effect:	• Interlocking of "NC START" • Interlocking of "Mode group ready"	
Explanation:	Leadscrew error compensation with rotary axes in NC machine data "Distance between 2 values" has been entered for the appropriate axis with a value which cannot be divided into 360 degrees to give an integer, i.e. grid spacing is not a whole number; e.g. • Correct: NC MD = 10 (rotary axis) • Results in: 360/10 = 36 grid points • Incorrect: NC MD = 11 • Would give 360/11 = 32.7 grid points The compensation value chosen is too large compared with the distance between two leadscrew error compensation points (valid for rotary and linear axes).	
Remedy:	Modify NC machine data "Distance between 2 values" - check NC MD 324* and 328*.	

104*	DAC monitor has responded	
Scan:	• Cyclic	
Effect:	• Interlocking of "NC START"	
Explanation:	For analog measuring circuit: The DAC set value entered is higher than in NC machine data 268* "Maximum setpoint speed (DAC)". It is not possible to increase the set value further.	
Remedy:	• Traverse more slowly • Check actual values (encoder) • Check NC machine data "Maximum setpoint speed (DAC)" • Check the drive actuator	

© Siemens AG 1990 All Rights Reserved

112*	Zero-speed monitoring	
Scan:	• When accelerating • When stopped • When clamping • When decelerating	
Effect:	• Interlocking of "NC START" • Interlocking of "Mode group READY" • Setpoint 0 • The control enable is removed after the time stored in NC machine data "Control enable cutout delay" has elapsed • Follow-up operation	
Explanation:	• The following error could not be cleared faster than the time entered in NC machine data "Control enable cutout delay" during positioning • On clamping the limit defined in NC machine data "Zero speed monitoring" was exceeded • A mechanically clamped axis has been pushed out of position • Fault in the control device (actuator), at the tacho, at the motor, in the CNC measuring circuit hardware or at/on the pulse encoder • Incorrect specification on assigning the set value output • On installation, wrong position control direction	
Remedy:	• NC machine data "Coarse exact positioning limit" must be greater than "Zero speed monitoring" • NC machine data "Control enable cutout delay" must be large enough for the following error to be removed within this time (only applies if NC machine data "Zero speed monitoring delay" = 0) • NC machine data "Zero speed monitoring delay" must be large enough for the following error of the individual axis to be removed within the time entered • Check actual values (encoder) and position control direction	

© Siemens AG 1990 All Rights Reserved

116*	Contour monitoring	
Scan:	For all modes: • When decelerating • When accelerating • At speeds lower than that in NC machine data "Contour threshold speed"	
Effect:	• Interlocking of "NC START" • Interlocking of "Mode group READY" • Setpoint 0 • The control enable is removed after the time stored in NC machine data "Control enable cutout delay" has elapsed • Follow-up operation	
Explanation:	• With a speed greater than that in NC machine data "Contour threshold speed", the NC machine data "Tolerance band contour monitoring" was exceeded • When accelerating or decelerating the axis has not reached the new speed within the time defined by the KV factor	
Remedy:	• Increase NC machine data "Tolerance band contour monitoring" • Check KV factor • Check the optimization of the speed controller • Check the actual values (pulse encoder) • Check the free movement of the axes • Reduce acceleration	

© Siemens AG 1990 All Rights Reserved

120*	Axis specification illegal	
Scan:	• On POWER ON	
Effect:	• Axis is not processed • Controller disable for the relevant axis • Mode group READY removed • Interlocking of "NC START"	
Explanation:	• Specification of MD200x or MD384x in the relevant axis missing. Example: MD2000 = 01020101 and MD384 = 00000000 • Specification of module number in MD200x or MD384x is greater than the number of measuring circuit modules present. Example: MD2000 = 04010000 and 3 measuring circuit modules are plugged in. • Specification of the connection number in MD200x or MD384x is greater than the number of connections on the appropriate module. Example: MD3840 = 02070000; the 2nd measuring circuit module is a SPC module and therefore has only 6 connections. • Connection number for an input is assigned to an output and vice versa. Example: MD3840 = 01030000; the 1st measuring circuit module is a HMS module and connection number 3 there is an input connection. • Input or output assignment is not compatible with the plug-in submodule. Example: MD2000 = 01040101; the 1st measuring circuit module is a HMS module with output submodule Servo-Command 6FX1132-5BAxx on its submodule slot 1.	
Remedy:	• Check and correct MD200x and MD384x of the relevant axis. Both these machine data must be specified or must be zero. In addition, they must agree with the hardware configuration.	

© Siemens AG 1990 All Rights Reserved

128*	Measuring circuit not available	POWER ON
Scan:	• On POWER ON	
Effect:	• Axis is not processed • Control disable for the axis concerned • NC READY 2 removed • Interlocking of NC START • Interlocking of "Mode group ready"	
Explanation:	• MD200x or MD384x indicates an empty slot on a measuring circuit module containing submodules. Example: MD3840 = 01090000; the 1st measuring circuit module is a HMS module with submodule slot 2 empty. • Measuring circuit module removed or defective.	
Remedy:	• Compare MD200x or MD384x with hardware configuration, and correct.	

132*	Control loop hardware axis	POWER ON
Scan:	• Cyclic	
Effect:	• Interlocking of "NC START" • Interlocking of "Mode group READY" • Setpoint = 0 • The control enable is removed after the time stored in NC machine data "Control enable cutout delay" has elapsed • Follow-up operation	
Explanation:	The measuring circuit difference signals • Are not in phase • Have a fault to earth • Are completely missing	
Remedy:	• Check whether the measuring circuit connector has been plugged in • By plugging in the measuring circuit short-circuit connector it is possible to check whether the measuring circuit group is in working order • Check the difference signals using an oscilloscope • Replace the encoders • Check NC MD 200*, 384* The alarm can only be cancelled by POWER ON.	

© Siemens AG 1990 All Rights Reserved

136*	Contamination measuring system axis	
Scan:	• Cyclic	
Effect:	• Interlocking of "NC START" • Interlocking of "Mode group READY" • Machining stops	
Explanation:	• On measuring systems with a contamination signal (e.g. EXEs) an error is sent to the NC from the measuring system.	
Remedy:	• Check the measuring system in accordance with the manufacturer's instructions.	

140*	Encoder monitoring	
Scan:	• Cyclic	
Effect:	• Interlocking of "Mode group ready" • Interlocking of "NC START" • Alarm leads to machining stop	
Explanation:	• Transmission errors or noise from encoder	
Remedy:	• Check encoder, cable, connector	

144*	Zero mark monitoring responded	
Scan:	• Cyclic, depending on the specification of the tolerance band for difference pulses	
Effect:	• Interlocking of "NC START" • Machining stops	
Explanation:	Transmission errors, noise or too high speed have caused pulses to be lost relating to an encoder revolution, which is beyond the permissible tolerance band. A comparison counter checks this zero mark.	
Remedy:	• Check encoder pulses and determine permissible deviation • Check transmission path • Switch off monitoring system briefly by presetting a value larger than 16 in the machine data	

© Siemens AG 1990 All Rights Reserved

148*	SW limit switch plus	
Scan:	• On each axis movement	
Effect:	• Machining stops • Interlocking of "NC START"	
Explanation:	• The software limit switch only becomes active after an approach to reference point. • Depending on the PLC interface signal "Second software limit switch active", the first or the second limit switch has been approached.	
Remedy:	• Traverse away from the limit switch in the opposite direction in JOG mode. • Check the values in machine data for software limit switches.	

152*	SW limit switch minus	
Scan:	• On each axis movement	
Effect:	• Machining stops • Interlocking of "NC START"	
Explanation:	• The software limit switch becomes active only after reference point approach has taken place. • The first or second software limit switch has been approached, according to the PLC interface signal "Second software limit switch active".	
Remedy:	• Travel away from the software limit switch in the opposite direction using JOG mode. • Check NC machine data for 1st software limit switch minus or 2nd software limit switch minus.	

© Siemens AG 1990 All Rights Reserved

156*	Speed setpoint alarm limit activated
Scan:	Cyclic
Effect:	• Interlocking of "NC START" • Interlocking of "Mode group READY" • Setpoint 0 • The control enable is removed after the time stored in NC machine data "Control enable cutout delay" has elapsed • Follow-up operation
Explanation:	• A higher set speed value has been output within the control than set in NC machine data "Threshold for drive errors". • The motor could not follow the setting of the speed set value. • On installation: wrong position control direction
Remedy:	• Check whether the value in NC machine data "Threshold for drive errors" is greater than the value in NC machine data "Max. speed setpoint (DAC)" • Check the drive • Check the position control direction • Check the speed set value cable • Check actual values (encoder)

160*	Drift too high
Scan:	Only with semi-automatic drift compensation
Effect:	• Interlocking of "NC START" • "Position not yet reached" is displayed • No traversing movement is possible
Explanation:	The drift to be compensated by the NC automatically has risen beyond approximately 500 mV.
Remedy:	• Carry out drift compensation in NC machine data "Drift compensation" • Check whether the drift on the drive unit has been set correctly

© Siemens AG 1990 All Rights Reserved

164*	Coupled axis programmed	
Scan:	When working in AUTOMATIC or MDA	
Effect:	• Machining is interrupted • Interlocking of "NC START"	
Explanation:	The axis-specific alarm appears if a coupled axis is assigned several times in one part program block or if an axis is "Leading axis" and coupled axis in one part program block at the same time.	
Remedy:	• Check and correct program	

168*	Controller enable travelling axis	
Scan:	On each axis movement	
Effect:	• Interlocking of "NC START" • Interlocking of "Mode group READY" • Setpoint 0 • The control enable is removed after the time stored in NC machine data "Control enable cutout delay" has elapsed • Follow-up operation	
Explanation:	The axis-specific controller enable has been removed by the PLC during a traversing movement.	
Remedy:	• Check the PLC program	

172*	Working area limitation plus	
Scan:	When working in AUTOMATIC or MDA	
Effect:	• Interlocking of "NC START" • Machining stops	
Explanation:	The working area limitation specified in the setting data has been reached.	
Remedy:	• Check the working area limitation in the setting data • Check the program • Program G26 with different values	

© Siemens AG 1990 All Rights Reserved

176*	Working area limitation minus
Scan:	When working in AUTOMATIC or MDA
Effect:	• Machining stops • Interlocking of "NC START"
Explanation:	The working area limitation minus pre-set in the setting data of the NC has been reached.
Remedy:	• Check the working area limitation in the setting data • Check the machining program • Program G25 with different values

180*	Axis active in several channels
Scan:	When working in AUTOMATIC or MDA
Effect:	• Interlocking of "NC START" • Machining stops
Explanation:	When exiting two or more programs in different channels at the same time, one axis has been programmed in both programs (channels).
Remedy:	• Check both programs • Insert L999 or @714 • Stop a channel by pressing NC STOP

188*	HW limit switch plus
Scan:	Cyclic
Effect:	• Interlocking of "NC START" • Direction key in the direction of approach disabled • Machine stops
Explanation:	The limit switch is approached in the plus direction or is compensated by other errors.
Remedy:	• Travel away in the opposite direction • Check PLC user program • Check limit switches

© Siemens AG 1990 All Rights Reserved

192*	HW limit switch minus	
Scan:	Cyclic	
Effect:	• Machining stops • Interlocking of "NC START" • Direction key disabled in approach direction	
Explanation:	The machine limit switch in the minus direction has been approached or has been activated by other errors.	
Remedy:	• Travel away in the opposite direction in JOG mode • Check limit switches • Check PLC user program	

196*	Coupled axis assigned twice	
Scan:	When working in AUTOMATIC or MDA	
Effect:	• Interlocking of "NC START" • Machining is interrupted	
Explanation:	• 2 leading axes have been programmed whose coupled axes are the same. Axis X → Axis Y Axis Z → Axis Y • 2 leading axes have been programmed with one leading axis also being the coupled axis of the other leading axis. Axis X → Axis Y Axis Y → Axis Z	
Remedy:	• Check program	

© Siemens AG 1990 All Rights Reserved

2000	Emergency Stop
Scan:	Cyclic
Effect:	• Interlocking of "NC START" • Setpoint 0 • Follow-up operation as internal setting
Explanation:	The "EMERGENCY STOP" signal is output to the NC by the PLC.
Remedy:	• Check with PLC STATUS • Check whether "EMERGENCY STOP" cam has been approached or "EMERGENCY STOP" button has been actuated • Check the PLC user program
Note:	On selecting Installation mode, there is always an Emergency Stop message.

2031	Weighting factor too large/small
Scan:	When working in AUTOMATIC or MDA
Effect:	• Interlocking of "NC START" • Machining stops • Deletion of partial setpoint
Explanation:	The actual axis speed has become so large, as a result of recalculation with the specified weighting factor, that the maximum permissible speed with the axis-specific position control resolution set has been exceeded.
Remedy:	• Check NC machine data "Weighting factor" (MD 388*) • Program a lower speed • Reduce the feedrate or rapid override

2036	G35 lead decrease too great
Scan:	With thread cutting
Effect:	• Interlocking of "NC START" • Machining stops
Explanation:	The lead decrease in the thread is so large that a lead greater than or equal to 0 would result at the end of the thread.
Remedy:	• Program a smaller lead decrease or a shorter thread

© Siemens AG 1990 All Rights Reserved

2037	Programmed S value too high	
Scan:	When executing part programs in AUTOMATIC or MDA	
Effect:	None; for information only	
Explanation:	The programmed spindle speed in AUTOMATIC/MDA is greater than S 12000	
Remedy:	• Program smaller spindle speed	

2038	Path feedrate too high	
Scan:	When executing from part programs in AUTOMATIC or MDA	
Effect:	• Machining is interrupted • Interlocking of "NC subsequent START" • Axes go into follow-up mode, servo-enable is removed	
Explanation:	The axis speed has been made so large by the programmed path feedrate that the maximum permissible axis speed with the position control resolution set has been exceeded.	
Remedy:	• Program a smaller path feedrate • Check interpolation combinations in the part program block	

2039	Reference point not reached	
Scan:	When starting a part program or program block in AUTOMATIC or MDA	
Effect:	• Interlocking of "NC START"	
Explanation:	The reference point has not been approached by at least one axis and "NC START" has been pressed in MDA or AUTOMATIC mode	
Remedy:	• Approach reference point • The alarm does not occur if the NC machine data "NC START without reference point" is set	

© Siemens AG 1990 All Rights Reserved

2041	Program not in memory
Scan:	When specifying a program number and then pressing NC START
Effect:	• Interlocking of "NC START" • Machining stops
Explanation:	• The preselected program is not in the memory • A non-existent subroutine is called in the main program • The contour for the stock removal cycle does not exist • Select "Overview"
Remedy:	• Check program

2042	Parity error in memory
Scan:	When working in AUTOMATIC or MDA
Effect:	• Interlocking of "NC START" • Machining stops
Explanation:	One or more characters in the memory have been corrupted so that they can no longer be recognized. • These characters are displayed in the "Correction block" or in the part program under "Programming" as "?"
Remedy:	• Clear part program block and reenter

2043	Program error with transformation
Scan:	When working in AUTOMATIC or MDA
Effect:	• Interlocking of "NC START" • Machining is interrupted
Explanation:	• Programming actual axes with transformation selected • Programming fictitious axes with transformation deselected • Selecting transformation although transformation has already been selected • Programming traversing movements in the selection block of transformation
Remedy:	• Correct program

© Siemens AG 1990 All Rights Reserved

2044	External execution error
Scan:	When starting a program from external
Effect:	NC Start is interrupted
Explanation:	The alarm is displayed • When the selected program from external is already being processed in another channel • When an interface (RS232C (V.24) or file transfer) is to be addressed in several channels • When an interface is to be addressed which is already busy • When an interface is to be addressed while an alarm is present • When "location receiver" or "logical receiver" are unknown at the beginning of the file transfer.
Remedy:	• Check machine data 130* • Check the active interfaces • Check machine data 5148 - 5152

2046	Block > 120 characters
Scan:	When working in AUTOMATIC or MDA
Effect:	• Interlocking of "NC START" • Machining stops
Explanation:	An "LF" in the memory is corrupted so that a block of more than 120 characters has resulted.
Remedy:	• Insert "LF" without deleting the whole block

2047	Option not available
Scan:	After presetting or programming a function which is not present
Effect:	• Interlocking of "NC START" • Machining stops
Explanation:	A function has been programmed which is not included in the function set of the control.
Remedy:	• Check program • Check NC machine data • Have service check function options

© Siemens AG 1990 All Rights Reserved

2048	Circle end point error
Scan:	When processing a circle block in AUTOMATIC or MDA
Effect:	• Interlocking of "NC START" • Machining stops
Explanation:	• The programmed circle end point is not on the circle. • The end point is further out than the limit input in NC machine data "Circle end point monitoring"
Remedy:	• Correct program

2056	Travelling through transformation center
Scan:	When working in AUTOMATIC or MDA
Effect:	• Interlocking of "NC START" • Machining is interrupted
Explanation:	With "TRANSMIT" transformation selected, a part program block which brings about a movement directly through the transformation center has been programmed.
Remedy:	• Correct program Alarm displays block and channel

2057	Thread/rev. feed option missing
Scan:	When processing a part program block with corresponding function specified
Effect:	• Machining is not started or is terminated • Interlocking of "NC START"
Explanation:	• A thread has been programmed with G33, G34, G35 although this function is not available in the control • Revolutional feedrate G95 has been programmed • With 840 T, the NC machine data "Revolutional feedrate" has not been set • A program not included in the function set of the control has been programmed
Remedy:	• Check program • Check NC machine data • Have function options upgraded. Alarm displays block and channel.

© Siemens AG 1990 All Rights Reserved

2058	3D interpolation option missing
Scan:	When executing program blocks in AUTOMATIC or MDA
Effect:	• Machining stops • Interlocking of "NC START"
Explanation:	More than two axes have been programmed in one block in a program, or a function has been selected which may result in additional axes from the programming, e.g. when setting the coordinate rotation.
Remedy:	• Check program • Have function option retrofitted if possible Alarm displays block and channel.

2059	Programming error with G92
Scan:	When processing a corresponding part program block
Effect:	• Machining is not started or is terminated • Interlocking of "NC START"
Explanation:	• An illegal address letter has been used • The unit and working diameter factor is ZERO
Remedy:	• Check program block • Check machine data Alarm displays block and channel.

2060	Programming error with TO or ZO
Scan:	When processing a corresponding program block
Effect:	• Machining is interrupted • Interlocking of "NC START"
Explanation:	• Tool type is 0 (i.e. no tool) • A tool offset number which is not present has been selected • The values in the zero offsets or tool offsets selected are too large
Remedy:	• Check and correct specifications of tool offsets and zero offsets • Check and correct program Alarm displays block and channel.

© Siemens AG 1990 All Rights Reserved

2061	General programming error
Scan:	When processing a part program or program block in AUTOMATIC or MDA
Effect:	• Machining is stopped or is not started • Interlocking of "NC START"
Explanation:	The input resolution determines the range limit for positional data; if the programmed path length exceeds the permissible distance to go, the alarm is triggered.
Remedy:	• Check the program part and correct the incorrect setting • Check the input resolution selected Alarm displays block and channel.

2062	Feedrate missing
Scan:	When processing program blocks in AUTOMATIC or MDA
Effect:	• Machining stops • Interlocking of "NC START"
Explanation:	• Revolutional feedrate G95 greater than 50 mm/min. has been programmed • No revolutional feedrate has been programmed • No feedrate value (F value) has been programmed • Feedrate is missing for soft approach and exit • Setting in machine data MD 280* for max. speed of an axis has been given the value 0
Remedy:	• Check settings in program block • Check machine data settings • Cancel alarm using "RESET" key Alarm displays block and channel.

© Siemens AG 1990 All Rights Reserved

2063	Thread lead too great
Scan:	With thread cutting with G33
Effect:	• Machining stops • Interlocking of "NC START"
Explanation:	• The thread lead can be specified in the program under I, J or K. The programmed set value exceeds the permissible value depending on the pre-set display resolution • Correct program block whose block number and channel number are specified in the alarm display
Remedy:	• Cancel alarm using RESET

2064	Rounding axis incorrectly programmed
Scan:	When exiting in AUTOMATIC or MDA
Effect:	• Interlocking of "NC START" • Programmed path is not exited • Machining stops
Explanation:	If a rotary axis is rounded to a half or whole degree, then the control monitors whether the rounding has been maintained for the programmed positions.
Remedy:	• Program correct position in the rotary axis • Check the machine data "Whole/half degree" and "Rotary axis" • Check whether the interface signal "Clear distance to go" has been set, in which case no automatic rounding takes place.
Note:	In the JOG modes, the control automatically rounds to valid values. In AUTOMATIC or MDA, the control only monitors the programmed positions without itself carrying out rounding.

© Siemens AG 1990 All Rights Reserved

2065	Progr. position behind SW lim. switch
Scan:	When executing in AUTOMATIC or MDA
Effect:	• Interlocking of "NC START" • Programmed path is not exited • Machining stops
Explanation:	The programmed end point of the block is beyond the software limit switch.
Remedy:	• Correct program • Depending on the PLC interface signal "2nd software limit switch active", check Machine data "1st software limit switch plus" Machine data "1st software limit switch minus" Machine data "2nd software limit switch plus" Machine data "2nd software limit switch minus" Alarm displays block and channel.

2066	Thread increase/decrease too great
Scan:	When executing in AUTOMATIC or MDA
Effect:	• Interlocking of "NC START" • Machining stops
Explanation:	A thread or lead increase or decrease of more than 16 mm/revolution (0.6 inches/revolution) has been programmed.
Remedy:	• Program smaller lead increase/decrease Alarm displays block and channel.

2068	Pos. behind working area limitation
Scan:	When executing in AUTOMATIC
Effect:	• Interlocking of "NC START" • Programmed path is not executed • Machining stops
Explanation:	The programmed end point of the block is beyond the working area limitation.
Remedy:	• Correct program Alarm displays block and channel.

© Siemens AG 1990 All Rights Reserved

2069	5D tool length comp. not possible
Scan:	When executing in AUTOMATIC
Effect:	• Machining is interrupted or not performed • Interlocking of "NC START"
Explanation:	• Cutter radius compensation has been selected • No linear interpolation has been selected • Function is not enabled • Machine data have been entered incorrectly • 3D function is not present
Remedy:	• Check program • Check machine data Alarm displays block and channel.

2070	5D interpolation missing
Scan:	When processing program blocks in AUTOMATIC or MDA
Effect:	• Machine stops • Interlocking of "NC START"
Explanation:	More than three axes have been programmed in one block in a program, or a function has been selected which may result in additional axes from the programming, e.g. when specifying the coordinate rotation.
Remedy:	• Check program • Have function option retrofitted if possible Alarm displays block and channel.

2072	Wrong input value contour definition
Scan:	When working in AUTOMATIC or MDA
Effect:	• Machining is not performed or is terminated • Interlocking of "NC START"
Explanation:	When programming, an input which cannot be calculated was specified for contour definition calculation.
Remedy:	• Check program and correct input values • Cancel alarm using "RESET" Alarm displays block and channel.

© Siemens AG 1990 All Rights Reserved

2073	No intersection contour definition
Scan:	When working in AUTOMATIC
Effect:	• Machining is not performed or is terminated • Interlocking of "NC START"
Explanation:	In calculating the contour definition with the programmed values, no intersection results.
Remedy:	• Check program settings • Cancel alarm using "RESET" Alarm displays block and channel.

2074	Wrong value for angle cont. def.
Scan:	When working in AUTOMATIC or MDA
Effect:	• Interlocking of "NC START" • Machining stops
Explanation:	• Angle > or = 360 degrees has been programmed • Value of angle for the contour described is meaningless
Remedy:	• Check and correct program settings • Cancel alarm using "RESET" Alarm displays block and channel.

2075	Wrong value for radius cont. def.
Scan:	When working in AUTOMATIC or MDA
Effect:	• Interlocking of "NC START" • Machining stops
Explanation:	• Radius value too large • Radius value not permitted with the contour described
Remedy:	• Correct program • Cancel alarm using "RESET" Alarm displays block and channel.

© Siemens AG 1990 All Rights Reserved

2076	Wrong G02/G03 contour definition	
Scan:	When working in AUTOMATIC or MDA	
Effect:	• Interlocking of "NC START" • Machining stops	
Explanation:	Circle direction with the contour described is not possible	
Remedy:	• Correct program • Cancel alarm using "RESET" Alarm displays block and channel.	

2077	Wrong block sequence contour def.	
Scan:	When processing part programs in AUTOMATIC	
Effect:	• Machining is terminated • Interlocking of "NC START"	
Explanation:	In calculating the contour definition several blocks are required. • Block sequence cannot be correct • Inadequate information is available (under-defined)	
Remedy:	• Correct program • Cancel alarm using "RESET" Alarm displays block and channel.	

2078	Coordinate rotation not allowed	
Scan:	When processing part programs in AUTOMATIC or MDA	
Effect:	• Machining stops • Interlocking of "NC START"	
Explanation:	• Programmed parameter sequence is not permitted • Parameter sequence is incomplete with the contour described Example: N10... X60 B15 LF (Z axis missing) N20... X90 B10 LF	
Remedy:	• Check program • Cancel alarm using "RESET" Alarm displays block and channel.	

© Siemens AG 1990 All Rights Reserved

2081	Block not allowed with TNRC/CRC
Scan:	When processing in AUTOMATIC
Effect:	• Machining is stopped • Interlocking of "NC START"
Explanation:	With TNRC/CRC selected, the following functions may not be programmed: G33, G34, G35, G58, G59, G92
Remedy:	• Program G40 beforehand • Deselection by means of G41, G42 D00 (CRC/TNRC) Alarm displays block and channel.

2082	CRC plane cannot be defined
Scan:	When processing a part program in AUTOMATIC
Effect:	• Machining is stopped • Interlocking of "NC START"
Explanation:	The axes of the CRC plane selected do not exist.
Remedy:	• Check Machine data "Abscissa for prog. G16" Machine data "Ordinate for prog. G16" Machine data "Applicate for prog. G16" • Select correct plane using G16 Alarm displays block and channel.

2083	Contour violation with TNRC/CRC
Scan:	When TNRC/CRC are selected in AUTOMATIC Not: • in selection block • in deselection block
Effect:	Contour violation may have taken place on the workpiece. Either execution of the program continues in accordance with MD 5024, bit 0 or execution is terminated. The alarm is acknowledged accordingly: Acknowledgement key or Reset key.
Explanation:	The correction calculation has produced a traverse movement which is opposite to the one programmed.
Remedy:	• Check program settings • If appropriate, deselect correction at a suitable place and reselect Alarm displays block and channel.

© Siemens AG 1990 All Rights Reserved

2087	Coordinate rotation not allowed	
Scan:	When working in AUTOMATIC or MDA	
Effect:	• Interlocking of "NC START" • Machining is interrupted	
Explanation:	• After selecting coordinate rotation (G54 to G59) a circular movement (G02, G03) was programmed in the following block. • After selecting coordinate rotation (angle ≠ 0 degrees) the settable zero offset (G54 to G57) was changed. • After selecting coordinate rotation (angle ≠ 0 degrees) the plane (G16, G17, G18, G19) was changed.	
Remedy:	• Correct program • The plane can only be changed if the angle of rotation is 0 degrees. • The settable zero offset (G54 to G57) can only be changed if the angle of rotation is 0 degrees. • Set angle of rotation in the settable zero offsets (G54 to G57) to 0 degrees and work only with G58 and G59.	

2160	Illegal scale factor	
Scan:	When working in AUTOMATIC or MDA	
Effect:	• Interlocking of "NC START" • Machining is interrupted	
Explanation:	The scale factor has exceeded the valid range of values: + P is negative + P = 0 + P > 99.99999	
Remedy:	Note the valid range of values for scale factor: (P = 0.00001 to 99.99999) Alarm displays block and channel.	

© Siemens AG 1990 All Rights Reserved

2161	Illegal scale modification
Scan:	When working in AUTOMATIC or MDA
Effect:	• Interlocking of "NC START" • Machining is interrupted
Explanation:	With a scale factor of ⩾ 1, an axis position was programmed which was so large that internal representation is no longer possible.
Remedy:	• Check programmed axis position • Reduce scale factor Alarm displays block and row.

2171	Approach not possible
Scan:	When working in AUTOMATIC or MDA
Effect:	• Machining is interrupted
Explanation:	In the block after approach, no axis for the selected plane (G16, G17, G18, G19) has been programmed, so that a vector to the tangential approach cannot be calculated. • In the selection block, or in the following block for soft approach, @714 has been programmed.
Remedy:	• Correct program (G147, G247, G347), programming at least **one** axis of the selected plane in the block after the approach. Alarm displays block and channel.

2172	Retraction not possible
Scan:	When working in AUTOMATIC or MDA
Effect:	• Machining is interrupted
Explanation:	In the block before retraction no axis for the selected plane (G16, G17, G18, G19) has been programmed, so that a vector to the tangential exit cannot be calculated. • In the deselection block or in the previous block @714 has been programmed • G48 programmed **without** previous selection
Remedy:	• Correct program (G148, G248, G348, G48), programming at least one axis of the selected plane in the block before the exit. Alarm displays block and channel.

© Siemens AG 1990 All Rights Reserved

2173	Approach/retraction plane wrong
Scan:	When working in AUTOMATIC or MDA
Effect:	• Machining is interrupted
Explanation:	• A plane change is programmed in the block after selection (G16, G17, G18, G19) • A plane change is programmed in the deselection block
Remedy:	• Correct program (plane change) Alarm displays block and channel.

2189	Transformation not defined
Scan:	On transformation selection
Effect:	• Interlocking of "NC START" • Machining stops
Explanation:	• The type of transformation is not defined • The transformation axes are in different mode groups • The option of selecting transformation is not available • Transformation has been selected in an illegal channel • Transformation is defined several times or wrongly • Transformation data block has been declared invalid by alarm 3087 (error in transformation data)
Remedy:	• Check transformation data block • Check program • Order option • Check channel number Alarm displays block.

2190	Transformation axes assigned
Scan:	On transformation selection
Effect:	• Interlocking of "NC START" • Machining stops
Explanation:	A transformation has been selected whose actual axes are also used in another channel in a parallel transformation.
Remedy:	• Wait until transformation is deselected in the parallel channel • Check program Alarm displays block.

© Siemens AG 1990 All Rights Reserved

2191	Transformation in zero point
Scan:	On selecting transformation in AUTOMATIC or MDA
Effect:	• Interlocking of "NC START" • Machining is interrupted
Explanation:	Transformation was selected at a time when one or more axes involved in transformation have the actual position ZERO. When selecting TRANSMIT, the X axis (transverse axis) must not have the actual position ZERO.
Remedy:	Before selecting transformation, set the actual axes of the transformation to be selected to permissible actual positions. (With TRANSMIT set the X axis to X ≠ 0) Alarm displays block.

2192	Following error comp. not possible
Scan:	At the beginning of a threading block, if the option has been selected.
Effect:	Machining is stopped and "NC START" is interlocked
Explanation:	The servo gain factor of the axes involved in the thread cutting is too small.
Remedy:	Check the servo gain factors of the axes involved in the thread cutting and correct if necessary.

2194	FIFO option not available
Scan:	After POWER ON or warm start
Effect:	• Function is not executed • Interlocking of NC START
Explanation:	FIFO has been assigned to a channel but has not been activated.
Remedy:	• Correct program • Check NC MD • Have service personnel check the function option • Have function option retrofitted

© Siemens AG 1990 All Rights Reserved

2195	Too many FIFO channels defined	
Scan:	On POWER ON or warm start	
Effect:	– Interlocking of "NC START" – Machining not possible	
Explanation:	The FIFO memory can be assigned to a maximum of two channels	
Remedy:	– Check NC MD	

2500	Program being edited	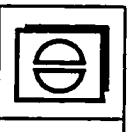
Scan:	On NC START	
Effect:	• Interlocking of "NC START" • Machine stops	
Explanation:	NC START calls a program which is in the process of being edited	
Remedy:	Terminate editing	

2501	Program being read-in	
Scan:	On NC START	
Effect:	• Function is not executed • Interlocking of "NC START"	
Explanation:	NC START calls a program which is in the process of being read in through the RS232C (V.24) interface.	
Remedy:	Wait for the end of the read-in process	

2502	Program exists already	
Scan:	When starting a program from external	
Effect:	• "NC START" is interrupted	
Explanation:	The alarm is displayed – if a program with the same program no. as the program to be processed externally is already in the part program memory.	
Remedy:	– Rename or delete the program which already exists	

© Siemens AG 1990 All Rights Reserved

2503	Not enough memory available
Scan:	When starting a program from external
Effect:	• "NC START" is interrupted
Explanation:	The alarm is displayed – when the memory set in MD30 is not available for the program to be processed externally.
Remedy:	– Make sufficient part program memory available (delete part programs) – Lower value in MD30

3000	General programming error
Explanation:	• A general programming error which cannot properly be explained has been made in one block in the program.
Remedy:	• Division by 0 • A G function which does not exist has been programmed • An R parameter which does not exist has been programmed • No +,-, /," has been programmed in the R parameter chaining • Range of values has been exceeded with R parameter calculation • Number of decades exceeded (M, S, T, D, H, L, P, F) • Subroutine number of passes P not programmed directly behind L • Main block ":" programmed in subroutine • Two decimal points programmed • Decimal point programmed with M, S, T, D, H, L, P • More than 8 decades programmed • Check the incorrect block in the "Correction block" display • The cursor is placed on the incorrect word, if possible • The block number of the incorrect block is positioned behind the alarm number in the alarm line. • Auxiliary functions D, F, S or T are programmed with a minus sign. **Example:** 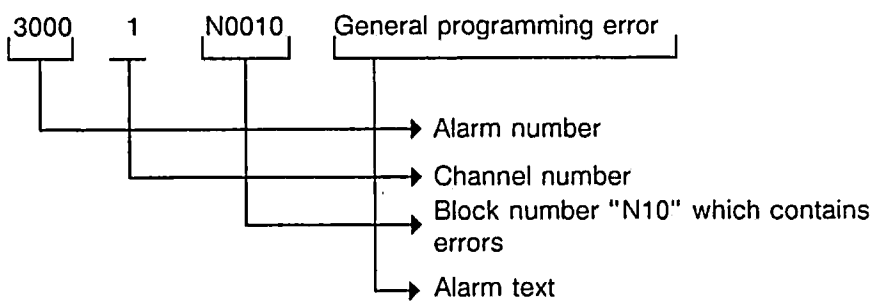

© Siemens AG 1990 All Rights Reserved

3001	Number of geometry parameters > 5
Scan:	When executing part programs
Effect:	• Machining stops
Explanation:	• More than 2 radii or more than 2 angles have been programmed in the block • More than 5 geometry parameters such as axes, interpolation parameters, radii, angles, etc. have been programmed in the block
Remedy:	• Check the faulty block in the "Correction block" display • If possible the cursor is positioned in front of the faulty word • The number of the faulty block is after the alarm number in the alarm line Example: 3000 1 N0010 General programming error 3000 - Alarm number 1 - Channel number N0010 - Block number "N10" containing errors. Alarm displays block and channel.

3002	Polar coordinate/radius error
Scan:	When executing part programs
Effect:	• Channel-specific machining stop
Explanation:	No programming in the block with polar/radius programming for: • Angle • Radius • Coordinates for the centre point are not absolute • Full circle
Remedy:	• Check the faulty block in the "Correction block" display • If possible the cursor is positioned in front of the faulty word • The number of the faulty block is after the alarm number in the alarm line Example: 3000 1 N0010 General programming error 3000 - Alarm number 1 - Channel number N0010 - Block number "N10" containing errors. Alarm displays block and channel.

© Siemens AG 1990 All Rights Reserved

3003	Invalid address programmed	
Scan:	When working in AUTOMATIC or MDA	
Effect:	• Machining stops	
Explanation:	Another address has been programmed than that entered in NC machine data, or the plane assignment (cube) and the axis definition in the channel do not agree. Example: Wrong: N20 G0 C100 LF (rapid traverse in fourth axis) However, the fourth axis is defined by the address Q in the NC machine data. Correct: N20 G0 Q100 LF	
Remedy:	• Check the faulty block in the "Correction block" display • Check the channel-specific machine data 548* • If possible the cursor is positioned in front of the faulty word • The number of the faulty block is after the alarm number in the alarm line Example: 3000 1 N0010 General programming error 3000 - Alarm number 1 - Channel number N0010 - Block number "N10" containing errors. Alarm displays block and channel.	

© Siemens AG 1990 All Rights Reserved

3004	**Error in CL800 language**
Effect: Explanation:	Machining stops Formal errors • Incorrectly entered characters (0...9 and a...f are possible) • @ number is greater than the decades for a text-type message • @ number or @ function not implemented with SINUMERIK 840 • @ number or @ function cannot be programmed in CL800 or are not defined Input errors with address letters and numerical values • Incorrect address letters (K, R and P are permitted) • Number of decades too high (max. K 8 decades permitted) • Number of decades too high (max. R 4 decades permitted) • Number of decades too high (P 4 decades permitted) • R parmeter number not defined or too high • Point programmed in R parameter number • Point programmed in P parameter number • Incorrect number of words Input errors with specific @ functions: Program branching • Error in the block number (programmed point, block number greater than four decades) Data transfer system line - R parameter • Constant or R parameter contents programmed to be too large for information such as: axis number, channel number, TO area, NC/PLC machine data, NC setting data, D number, P number, group for zero offsets, preset "COARSE/FINE" alarm number • Bit number too large (0 to 7 are permitted) • System line non-existent • Incorrect value input for system line Mathematical and logical functions • Value selected too high for square root (+/- 00 000 001...99 999 999 permitted) • Incorrect angle selected for sine (-360 (0) + 360 permitted) • Two constants used for: Angle from two vector components, OR, EXOR, AND, NAND • Incorrect characters input for logical functions (0, 1 permitted) (Only bits and bytes) (max. eight bits) NC specific functions • Incorrect address letter used for number of axes • Number of axes selected too high (max. 3 axes permitted per block) • No axis name programmed (0) Alarm displays block and channel.

© Siemens AG 1990 All Rights Reserved

3005	Error in contour definition
Scan:	When processing in AUTOMATIC
Effect:	• Machining stops
Explanation:	The coordinates in the contour description have been defined so that there is no intersection. • Too many geometry values have been programmed
Remedy:	• Check the faulty block in the "Correction block" display • If possible the cursor is positioned in front of the faulty word • The number of the faulty block is after the alarm number in the alarm line Example: 3000 1 N0010 General programming error 3000 - Alarm number 1 - Channel number N0010 - Block number "N10" containing errors. Alarm displays block and channel.

© Siemens AG 1990 All Rights Reserved

3006	Wrong block structure
Scan:	When processing programs in AUTOMATIC or MDA
Effect:	• Machining stops
Explanation:	• Approach to reference point for each program and specification of the wrong G function or more than one axis, or an impermissible axis. • Wrong lead parameters with G33 • More than 3 M functions in the block • More than 1 S function in the block • More than 1 T function in the block • More than 1 H function in the block • More than 4 auxiliary functions in the block • More than 6 axes + geometry parameters • More than 5 axes with G00, G01, G02, G03 • More than 2 axes with G10, G11 • More than 2 axes with G02, G03 (circle radius programming) • G04 programmed with addresses other than X, F or S • G04 is not programmed in the block by itself • M19 S is programmed with other functions • Incorrect circle parameters with G02, G03 axes • Axis missing with circle radius programming • Before the first G110 block in the program, a G10/G11 block must have been programmed • G110 may not be programmed with axes • Incorrect programming in connection with G176 freeze function
Remedy:	• Check the faulty block in the"Correction block" display • If possible the cursor is positioned in front of the faulty word • The number of the faulty block is after the alarm number in the alarm line

© Siemens AG 1990 All Rights Reserved

3007	Error in setting data programming
Scan:	When executing program blocks in AUTOMATIC or MDA
Effect:	• Machining stops
Explanation:	• M19 without S word • Spindle not present • Illegal setting data programmed, e.g. G92 X... Y..., G92 D, T, A, I, J
Remedy:	• Check the faulty block in the "Correction block" display • If possible the cursor is positioned in front of the faulty word • The number of the faulty block is after the alarm number in the alarm line Example: 3000 1 N0010 General programming error 3000 - Alarm number 1 - Channel number N0010 - Block number "N10" containing errors. Alarm displays block and channel.

3008	Subroutine error
Scan:	When processing program blocks in AUTOMATIC or MDA
Effect:	• Machining stops
Explanation:	• M17 not in the subroutine • M02, M30 in the subroutine • M17 in the main program • More than 3 subroutine levels
Remedy:	• Check the faulty block in the "Correction block" display • If possible the cursor is positioned in front of the faulty word • The number of the faulty block is after the alarm number in the alarm line Example: 3008 1 N0010 Subroutine error 3008 - Alarm number 1 - Channel number N0010 - Block number "N10" containing errors. Alarm displays block and channel.

© Siemens AG 1990 All Rights Reserved

3009	Program locked
Scan:	• On NC START, or when editing a program during machining
Effect:	• Machining stops
Explanation:	• Pressing "NC START" calls a program which was locked by being opened, by "Copy" or by "Rename". While a program is being edited it may not be called by "NC START". • If a program is to be edited while another program is being processed, it must be locked for execution.
Remedy:	Once editing is complete, the locked program must be enabled.

3010	Intersection error
Scan:	• When executing, part programs in AUTOMATIC
Effect:	• Machining stops
Explanation:	A mistake has been discovered during reference processing in conjunction with the calculation of intersection. Possible causes are: • Contour program without G00, G01, G03 • Contour program with "Empty buffer memory" (@714) • Programmed axes are not the same as the plane selected • No intersection found • Stock removal path circular • R parameter number not available
Remedy:	Check program in which contour is stored.

3011	Axis twice or too many axes
Scan:	• When executing part program blocks in AUTOMATIC or MDA
Effect:	• Machining stops
Explanation:	• An axis has been programmed twice in the same block • More than five axes have been programmed
Remedy:	• Check the faulty block in the "Correction block" display • If possible the cursor is positioned in front of the faulty word • The number of the faulty block is after the alarm number in the alarm line

© Siemens AG 1990 All Rights Reserved

3012	Block not available in memory
Scan:	• On block search or jumps in the part program
Effect:	• Machining stops
Explanation:	• On block search, the block number is not available in the program. • On jumping in the program, the programmed block number cannot be found. • Program which does not conclude with M30, M17 • The alarm is displayed – if a forward jump has been programmed outside the maximum memory area with "execution from external". (The target of the jump cannot be read in to the available memory area) – when backward jumps or jumps to the present block location have been programmed
Remedy:	• Check the part program as regards the correct block number target or the correct program conclusion with M30/M02 or M17. – Increase maximum memory for "Execution from external" (MD 30) – Lower jump distance – Delete backward jumps or jumps to the present block location.

3014	Axis in channel disabled
Scan:	• When executing program blocks in AUTOMATIC or MDA
Effect:	• Machining stops
Explanation:	The programmed axis is disabled for this channel by means of the NC machine data "Axis not valid for channel 1, 2, 3 or 4".
Remedy:	• Observe the programming notes of the machine manufacturer. • Correct machine data if necessary.

© Siemens AG 1990 All Rights Reserved

3015	Main block not in memory
Scan:	• On automatic block search
Effect:	• Processing is not started
Explanation:	No main block was found in front of the target block during an automatic block search.
Remedy:	• Check target block • Use another block search

3016	Error during external data input
Scan:	• On entering data from the PLC to the NC
Effect:	• Machining stops
Explanation:	With external data input from PLC and NC: • The code is incorrect • The value is too high • The dimension ID is not valid
Remedy:	• Check PLC program

3017	Part program exists twice
Scan:	• On POWER ON
Effect:	• Machining stops
Explanation:	The UMS submodule contains a part program which is already stored in the part program memory of the NC (with the same ID).
Remedy:	• Delete or rename the program in the part program memory • Use a different UMS

© Siemens AG 1990 All Rights Reserved

3018	Distance to contour too great
Scan:	• With AUTO interrupt in the circle block and travelling away from the point of interruption
Effect:	• Machining stops • Additional alarm 2048
Explanation:	If AUTOMATIC mode is interrupted while processing a circle block and the axes are positioned in a range, for example for tool change, outside the permissible tolerance for reapproach (scratching) (MD9) this alarm is triggered. To prevent incorrect positioning, the additional alarm 2048 - circle end point error - is set. Reapproach is only possible after a Reset.
Remedy:	Cancel alarms and perform a block search as far as the point of interruption. If necessary, check whether the MD9 setting can be made larger.

3019	Second V.24 not available
Scan:	• On selecting the interface
Effect:	• Function cannot be activated
Explanation:	The second V.24 (RS 232C) interface has been started from the PLC or with the softkey without the option previously being present.
Remedy:	• Transmit data via the first V.24 (RS 232C) interface • Have function option retrofitted

3020	Option not available
Scan:	• On specifying a non-existent function
Effect:	• Function is not processed
Explanation:	A function not included in the control has been programmed or selected.
Remedy:	• Have function option retrofitted.

© Siemens AG 1990 All Rights Reserved

3021	Contour violation with TNRC/CRC	
Scan:	When TNRC/CRC is selected Not: • In the selection block • In the deselection block	
Effect:	MD 5024.0 = 0: Machining is not interrupted, alarm can be acknowledged. MD 5024.0 = 1: Machining is interrupted. The operator can choose between terminating machining (NC Reset) or acknowledging the alarm and continuing with NC Start.	
Explanation:	• The compensation calculation has produced a traversing movement which is opposite to the one programmed. • In the case of linear-circular and circular-circular transitions in the > 180° angle range, there is no intersection.	
Remedy:	Check programming and tool radius.	

3022	Too many spindles programmed	
Scan:	• When executing part program blocks in AUTOMATIC or MDA	
Effect:	• Function is not executed	
Explanation:	Only one spindle may be programmed inany one part program block.	
Remedy:	Divide spindle programming into two or more blocks.	

3024	No display description	
Scan:	• On display selection	
Effect:	• None	
Explanation:	Using a programmed softkey, an attempt has been made to select a display not available in the UMS or system memory.	
Remedy:	With the aid of the NC workstation, the programmed display number and softkey function must be checked.	

© Siemens AG 1990 All Rights Reserved

3025	Incorrect display description	
Scan:	• On display selection	
Effect:	• Selected display does not appear	
Explanation:	On checking the display information an error has been discovered, e.g.: • The programmed display type is unknown • Block increment for the extended table display is incorrect (must always be 1 for absolute display)	
Remedy:	Check the display description with the NC workstation, in particular the information for data group, data type and format.	

3026	Fixed text part too large	
Scan:	• On display selection via softkey	
Effect:	• Not all fixed texts are displayed	
Explanation:	The programmed fixed text part in the display description is too large.	
Remedy:	• Check display with NC workstation and if necessary regenerate • Reduce fixed text part of display or divide contents into two displays	

3027	Graphics part too large	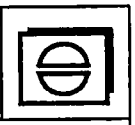
Scan:	• On display selection via softkey	
Effect:	• No graphics display	
Explanation:	The programmed graphics part in the display description is too large (max. 4 Kbytes).	
Remedy:	• Check display with NC workstation, and if necessary regenerate • Reduce graphics part of display	

© Siemens AG 1990 All Rights Reserved

3029	Window outside configuring area	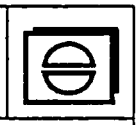
Scan:	• During display building	
Effect:	Display building is aborted when the window of a display being configured is outside the configuring area.	
Explanation:	Additional subdisplays can be configured in a screen. The subdisplay windows can be moved in the configuring area. As a result the window may have been moved outside the configuring area→configuring error.	
Remedy:	Configure the window movement so that it does not leave the configuring area (see also alarm 3037).	

3030	Cursor memory not available	
Scan:	• On display selection	
Effect:	The display selected is treated as though there were no cursor memory.	
Explanation:	The cursor memory programmed in the selected display is incorrect (illegal number, or too large).	
Remedy:	Redefine cursor memory with NC workstation, since the cursor memory has the task, when a display is recalled, of putting the cursor back where it was when the display was removed.	

3032	Variable part too large	
Scan:	• When selecting a display with a softkey	
Effect:	• None	
Explanation:	The programmed variable display part of the display description is too large.	
Remedy:	• Check display with NC workstation, and if necessary regenerate • Reduce variable display part	

© Siemens AG 1990 All Rights Reserved

3033	Display text not available
Scan:	• Cyclic
Effect:	• Display text not displayed
Explanation:	The display text generated at the NC workstation has not been transferred to the link list.
Remedy:	Check the link list and relink to the NC workstation; watch out for linking errors.

3034	Special text not available
Scan:	• On display selection via softkey
Effect:	• Special text not displayed
Explanation:	In the selected display, the following texts have not been inserted or have been inserted incorrectly: • Menu texts • Dialog texts • Mode texts • Alarm texts
Remedy:	Check the display generated with NC workstation and where appropriate regenerate.

3035	Indirect addressing incorrect
Scan:	• Cyclic
Effect:	• Variable values/texts not displayed
Explanation:	The display description for indirect addressing is incorrect. This affects the details in the display header for - data group, - data type, - data number and - data block. • Information for number of indirect elements of the list/display (IEL) is incorrect. • Variable text is selected but status or offset is not cancelled. • Variable value has been selected but status not cancelled.
Remedy:	Check the information for • Start of range pointer, • Length of range pointer and • Cursor pointer and check their relationship to one another • Check deselection of status or offset

© Siemens AG 1990 All Rights Reserved

3036	Variable status incorrect
Scan:	• Cyclic
Effect:	• Status taken from display description
Explanation:	In the display description form variable status, which can only be selected by the PLC, an incorrect data group has been specified or variable status has not been cancelled.
Remedy:	The display description must be modified with the aid of the NC workstation.

3037	User window not correct
Scan:	On control runup
Effect:	Displays to be shown in incorrect user windows are not displayed.
Explanation:	User windows can be defined in the UMS. These must lie within the configuring area, otherwise an alarm is given.
Remedy:	Check and correct user window in the UMS.

3038	Display called twice
Scan:	When the display is being reconstructed
Effect:	Display construction is aborted with the display that is repeatedly called in the same path.
Explanation:	In a display, additional subdisplays can be configured which themselves can have subdisplays. If a isplay is called which does not correspond to a display already configured, recursion results. This is prevented by aborting the display construction and issuing an alarm.
Remedy:	Avoid subdisplay linking which can lead to recursion.

© Siemens AG 1990 All Rights Reserved

3039	Multichannel display option missing
Scan:	• Cyclic
Effect:	• Fixed display parts only are displayed
Explanation:	If data which is reserved for multi-channel display is configured in a display, it can be displayed correctly only if the multi-channel display option is available.
Remedy:	Set multi-channel display option.

3040	Field/variable cannot be displayed
Scan:	• Cyclic
Effect:	• Not all variable values/texts are displayed
Explanation:	• Field/variable incorrectly programmed (data group not available) • Field/variable programmed with too few places • Field/variable overflow (value range exceeded) • Format error; format cannot be changed • Illegal pointer
Remedy:	• Check field/variable with NC workstation and if appropriate delete and reenter. If the alarm occurs with standard displays then the value range has been exceeded

3041	Too many fields/variables
Scan:	• Cyclic
Effect:	• Not all variable values/texts are displayed
Explanation:	The display description is too long so that the internal buffer is no longer adequate for processing the display. Too many variable values or texts have been programmed.
Remedy:	Using the NC workstation, the desired information must be reduced or divided amongst more than one display. A maximum number of fields/variables cannot be specified since the fields/variables have different formats and positions.

© Siemens AG 1990 All Rights Reserved

3043	Error in fixed display
Scan:	• On display selection
Effect:	• No fixed texts are displayed
Explanation:	An error has occurred in the system program or graphics processor in connection with the fixed display.
Remedy:	• Replace system program or if necessary replace graphics processor

3044	Error in variable display
Scan:	• Cyclic
Effect:	• No variable values/texts are displayed
Explanation:	An error has occurred in the system program or graphics processor in conjunction with the variable display structure.
Remedy:	• Change system program

3045	Error in graphics display
Scan:	• On selecting the display
Effect:	• No graphics are displayed
Explanation:	An error has occurred in the programmed graphics part of the display. The programmed display is output to the screen without further internal processing.
Remedy:	• The graphics part of the display must be checked using the NC workstation.

© Siemens AG 1990 All Rights Reserved

3046	Variable incorrect
Scan:	• On selecting the display
Effect:	• None
Explanation:	In the display description, a variable text has been programmed without an end identifier because of an error in the NC workstation software. This produces a transfer format error.
Remedy:	• Check NC workstation The error must be at the point of interruption of the subsequent elements which are no longer displayed.

3048	Faulty connection to keyboard
Scan:	• Cyclic on POWER ON
Effect:	• Standard keyboard provides incorrect operation, or operation is not possible; the machine control panel remains operable; processing is still possible.
Explanation:	The keyboard signals are interchanged via the key request unit interface to the operator panel interface module for display. If a module error or contact error or interference causes an interruption in the connection, this alarm occurs.
Remedy:	• Check connections (connectors) • Check power supply to the operator panel interface and the key request unit • Replace key request unit and if necessary also operator panel interface

3072	Alarm text not available
Scan:	• If an alarm occurs without alarm text
Effect:	• None
Explanation:	• When generating cycles, alarms have been provided for which no text was programmed • NC alarms which are provided in the system without text have occurred.
Remedy:	Look at the complete listing of alarm displays and check off alarm numbers without text specified. With cycle alarms, program an appropriate text. With system alarms, notify your Systems Support.

© Siemens AG 1990 All Rights Reserved

3081	CRC not selected at approach/exit
Scan:	• When executing in AUTOMATIC or MDA
Effect:	Machine stop does not occur but the program is executed without the approach element.
Explanation:	• CRC/TNRC (G41/G42) was not selected in or before the approach block. • CRC/TNRC was not deselected in or after the exit block. • Soft approach/exit is only possible when CRC/TNRC is selected because it is only then possible to calculate the programmed compensation movement exactly.
Remedy:	• Correct program (G41/G42) • If appropriate program with G41/G42 DO

3084	Illegal working area limitation
Scan:	• Cyclic
Effect:	The control automatically enters the maximum possible value in accordance with the traversing range in the working area limitation.
Explanation:	A value outside the permissible traversing area of the respective axis has been entered in the minimum or maximum axis-specific working area limitation.
Remedy:	• Check input • Check program (G25, G26, @..) • For maximum traversing range, refer to table (combination of axis-specific position control resolution and input resolution)

3085	NC-CPU time watchdog
Scan:	• Cyclic
Effect:	• Interlocking of "NC START" • Interlocking of "Mode Group ready" • Interlocking of machining • Interlocking of "NC READY" relay
Explanation:	The NC-CPU is overloaded with respect to time by a parallel program operation or by the selection of functions such as • Transformation (TRANSMIT, etc.) • Coupled axis motion
Remedy:	• Stop one program by using "NC STOP"

© Siemens AG 1990 All Rights Reserved

3086	Illegal transformation selection
Scan:	• On selecting or deselecting transformation via the command channel of the PLC
Effect:	• Interlocking of "NC START"
Explanation:	An illegal value has been transferred from the PLC via the command channel. Evaluation is in the error byte in the PLC.
Remedy:	• Check PLC user program

3087	Error in transformation data
Scan:	• On POWER ON • On warm start
Effect:	• Selected transformation data block is locked
Explanation:	An NC machine data with an illegal value is present in the selected transformation data block. The invalid NC machine data number is entered in the block number of alarm 3087.
Remedy:	• Check NC machine data for transformation data (block number of alarm 3087)

3088	F reduction at block change
Scan:	When processing in a channel with a FIFO memory
Effect:	None
Explanation:	The programmed feed is too high. The next block is not yet ready for processing in the control.
Remedy:	– Decrease feed – Program G171 (to bridge the critical point with fast block change)

© Siemens AG 1990 All Rights Reserved

3091	Reduction at SW prelimit switch
Scan:	• In AUTOMATIC or MDA when processing a part program block or when positioning the axes in JOG
Effect:	• Speed reduction to the value set in the machine data
Explanation:	The software prelimit switch has been exceeded and the axis speed is decelerated to the reduction speed (MD1).
Remedy:	• Check the traversing block • Check value in NC machine data 1100 "Prelimit switch" • Position axis beyond the prelimit switch range and cancel the alarm by pressing "Acknowledgement"

3092	Specified speed too high
Scan:	• When traversing by the program in AUTOMATIC or MDA
Effect:	• Machining stops
Explanation:	The specified speed (either programmed or by setting an override) is greater than the path speeds resulting from the maximum speeds of the axes
Remedy:	• Program a lower path speed or check override • Check NC machine data "Maximum speed" • Program a smaller spindle speed with G95

3093	G171 illegal
Scan:	After programming G171
Effect:	– Function is not executed
Explanation:	G171 is illegal for the following reasons: – No FIFO has been assigned to the current channel – "FIFO" has not been activated.
Remedy:	– Correct program – Check NC MD

© Siemens AG 1990 All Rights Reserved

3100	Transfer buffer already occupied
Scan:	• During computer link operation
Effect:	• No data transfer between NC and host computer
Explanation:	This alarm is not displayed but only sent from the NC to the host computer data is to be transferred by the computer but the transfer buffer is still occupied.
Remedy:	

3101	Program not in memory
Scan:	• When calling a program via computer link
Effect:	• None
Explanation:	A program has been requested for read-out but is not located in the NC memory. This alarm is not displayed in the message line but is only indicated in the operator display.
Remedy:	• Check whether program request is correct

3157	Stop in thread
Effect:	• None
Explanation:	• During thread cutting a stop has occurred in the revolutional feedrate which has destroyed the thread.
Remedy:	• Check axis-specific feedrate lock (DB32)

3158	PLC number not allowed
Scan:	• On selecting via softkey in a programmed display
Effect:	• None
Explanation:	Programmed field shows a non-existent PLC number; SINUMERIK 840 has only 1 PLC.
Remedy:	• Check assignments using NC workstation and correct

© Siemens AG 1990 All Rights Reserved

3159	Data block not available
Scan:	• On selecting via softkey in a programmed display
Effect:	• None
Explanation:	Programmed field indicates a non-existent data block.
Remedy:	• Check assignments using NC workstation and correct

3162	Not all programs deleted RS232C (V.24)
Scan:	• When reading in via serial interface
Effect:	• None
Explanation:	When reading in via the serial interface, an entire program area is to be deleted with % CLF. In doing so, a program number was specified which is presently being processed and therefore cannot be deleted.
Remedy:	Set "Delete program" with % CLF via the serial interface again after completion of the program concerned.

3166	Program coordinating wrong
Scan:	While processing in AUTOMATIC/MDA mode (block by block/channel-specific)
Effect:	• Machining stops
Explanation:	Addressed channel has not been defined or is not enabled
Remedy:	Change channel addressing Define or enable channel

© Siemens AG 1990 All Rights Reserved

3167	T/H word not acknowledged
Scan:	Cyclic
Effect:	None
Explanation:	• The target channel is not enabled in the PLC MD (signals from channel) • Routing in target channel has not yet been acknowledged by the user
Remedy:	The current routing and/or error must be acknowledged through the PLC program before the next routing is assigned.

3200	Program coordination syntax wrong
Scan:	While processing in AUTOMATIC/MDA mode (block by block/channel-specific)
Effect:	Interlocking of machining
Explanation:	Syntax error: invalid command mnemonics invalid modification parameters
Remedy:	Correct the faulty command

3201	Program coord.: Too many parameters
Scan:	While processing in AUTOMATIC/MDA mode (block by block/channel-specific)
Effect:	Interlocking of machining
Explanation:	More command parameters have been programmed than are permitted in the command description.
Remedy:	Correct the faulty command

© Siemens AG 1990 All Rights Reserved

3202	Program coord.: Area violation
Scan:	While processing in AUTOMATIC/MDA (block by block/channel-specific)
Effect:	Interlocking of machining
Explanation:	One or more command parameters violate the permitted lower and upper limit values
Remedy:	Correct the faulty command

3203	Program coord.: Illegal character
Scan:	While processing in AUTOMATIC/MDA mode (block by block/channel-specific)
Effect:	Interlocking of machining
Explanation:	Illegal separators are in the coordination command.
Remedy:	Correct the faulty command

3204	Program coord.: Command incomplete
Scan:	While processing in AUTOMATIC/MDA mode (block by block/channel-specific)
Effect:	Interlocking of machining
Explanation:	Parameters or closing brackets are missing in the programmed command or channel no. = 0
Remedy:	Correct the faulty command

© Siemens AG 1990 All Rights Reserved

3205	Program coord.: R parameter error
Scan:	While processing in AUTOMATIC/MDA mode (block by block/channel-specific)
Effect:	Interlocking of machining
Explanation:	– An error occurred while programmed R parameters were being substituted
Remedy:	Correct the faulty command

3206	Program coord.: Symb. para. forbidden
Scan:	While programming in AUTOMATIC/MDA (block by block/channel-specific)
Effect:	Interlocking of machining
Explanation:	With the exception of the R parameters, no symbol. parameters are permitted
Remedy:	Correct the faulty command

3220	Change G176 → G175
Scan:	• When working in AUTOMATIC or MDA
Effect:	• Activated freeze function is terminated leading to G175 function
Explanation:	During an activated freeze function for angle of rotation, zero offsets or length compensations, the ZO group was changed or the D no. was changed, an angle of rotation offset was activated or a G53 programmed. These functions result in termination of the "Freeze" function and a change to the G175 function.
Remedy:	• Check program blocks and correct

© Siemens AG 1990 All Rights Reserved

3233	Approach reference point not allowed	
Scan:	In "AUTOMATIC interrupted" state.	
Effect:	No referencing possible.	
Explanation:	If a program is interrupted with the NC STOP key or when changing from AUTOMATIC to JOG mode, it must not be possible to activate the submode of JOG, REFPOINT. (Safety function)	
Remedy:	– Reference in program (G74) – Abort program and reference using keys	

3234	Target block not available	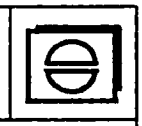
Scan:	When block search function is being applied	
Effect:	None	
Explanation:	Block being sought is not in the part program or is to be found after M30	
Remedy:	Check entered block number	

3235	Program end missing	
Scan:	When executing part programs	
Effect:	Machining comes to a stop	
Explanation:	Program end M30 is missing in part program	
Remedy:	Check part program	

© Siemens AG 1990 All Rights Reserved

3236	Illegal pole specification
Scan:	During processing
Effect:	Channel-specific machining stop
Explanation:	The pole plane of G110/G111/G112 does not correspond to the pole plane of G10/G11/G12/G13 which was last programmed or the pole plane was not defined by G10/G11/G12/G13 beforehand.
Remedy:	Check the incorrect block in the "Correction block" display. The cursor is positioned in front of the incorrect word, if possible. The block number of the incorrect block is displayed behind the alarm number in the alarm line.

3237	Program being edited
Scan:	When initiating read-out via the RS232C (V.24) interface
Effect:	Part program is not output
Explanation:	The control tries to output a part program which is in the process of being edited via the RS232C (V.24) interface.
Remedy:	Terminate editing and repeat read-out process

3238	Program being read-in
Scan:	When the read-out process is initiated via the RS232C (V.24) interface
Effect:	Part program is not read out
Explanation:	The control tries to output via the RS232C (V.24) interface a part program which is in the process of being read in via the RS232C (V.24) interface
Remedy:	Wait for the end of the read-in process and repeat read-out.

© Siemens AG 1990 All Rights Reserved

3239	EPROM cycle overwritten by SPF
Scan:	When reading in subroutines via RS232C (V.24) or computer link
Effect:	EPROM cycle replaced by subroutine
Explanation:	At least one subroutine has been read in which has the same number as an existing EPROM cycle. The EPROM cycle can no longer be called from a part program. The first EPROM cycle to be overwritten is displayed in the N number.
Remedy:	Delete the read in subroutine to save the EPROM cycle. To prevent overwriting generally, set setting data special bit 2, bit 3 of the RS232C (V.24) interface concerned or set MD 5147, bit 3 to 1 on file transfer.

3240	Subroutine not read-in
Scan:	When reading in subroutines via RS232C (V.24) or computer link
Effect:	At least one subroutine has not been read in
Explanation:	The control has attempted to read in at least one subroutine which has the same number as an existing EPROM cycle. The first subroutine not to be read in is displayed in the N number.
Remedy:	If the EPROM cycle is to be replaced by a subroutine, the setting data special bit 2, bit 3 must be set for the RS232C (V.24) interface in question, or MD 5147, bit 3 must be set to 0 on file transfer.

© Siemens AG 1990 All Rights Reserved

1000*	**Connection alloc. more than once**	**POWER ON**
Scan:	• When inputting machine data for axis assignment	
Effect:	No machining of the axes for which the connection number concerned has been assigned more than once. • Servo disable for the axis concerned • "Mode group ready" removed • Interlocking of "NC START"	
Erläuterung:	• A connection number of a measuring circuit module has been specified more than once under MD200x or MD384x. Example: MD3840 = 01060000, MD3845 = 01060000. Connection number 6 of the 1st measuring circuit module has thus been assigned more than once.	
Remedy:	• Check and correct MD200x or MD384x	

1008*	**Speed controller limitation**	
Scan:	• POWER ON and warm start	
Effect:	Interlocking of "Mode group ready" Interlocking of "NC START" Alarm causes machining to stop	
Explanation:	• Speed alarm limit has been reached	
Remedy:	• Check current controller • Slow down speed control loop • Increase parameter values • Check mechanical system	

© Siemens AG 1990 All Rights Reserved

1012*	Parameterization error drive MD	POWER ON
Scan:	• On POWER ON and warm start	
Effect:	• Corresponding axes switched to follow-up operation • Machining stops • Interlocking of "NC START" • "Mode group READY" is removed	
Explanation:	Setting error in the machine data, e.g. • Too large a ratio between interpolator clockrate and position control clockrate, because MD160>8 • Too large an internal KV factor by specification of - KV factor (252*) - Multgain (260*) - Pulse weighting • Ratio of cycle rate (MD165) to setting for fine interpolation (MD160) or check of MD584* "Identifier of auxiliary axes" is not a whole number • Incorrect measuring system adjustment with MD364* to MD368* (values chosen to be too large, e.g. instead of 1:1, 1000000:1000000 has been selected) • General drive MD parameter error • An illegal value has been entered for the pulse multiplication in connection with the high-resolution measuring system. Permissible values are: 1, 2, 4, 8, 32, 64, 128.	
Remedy:	Additional indication of cause of error is given by additional alarm. Check machine data The axis service display shows the service number for the parameterization errors and therefore the exact cause.	

1040*	Absolute encoder defective	POWER ON
Scan:	POWER ON	
Effect:	• Interlocking of "NC START" • Interlocking of "Mode group ready" • Machining stop	
Explanation:	If a SIPOS absolute encoder with absolute submodule is fitted and the absolute encoder function is selected in MD 1808*, bit 0, the absolute position is requested by the control on POWER ON. If it is not possible to transmit an absolute position from the encoder without any errors, this alarm is released.	
Remedy:	Check the encoder hardware (encoder, cable, connectors, absolute submodule). The SIPOS encoder must remain stationary during transmission of the absolute value, the axis must therefore be held by the brake if necessary.	

© Siemens AG 1990 All Rights Reserved

1044*	Battery absolute module	
Scan:	Cyclic, every 10 minutes	
Effect:	None	
Explanation:	The SIPOS encoder has a battery back-up on the absolute submodule so that the absolute position is not lost even when switched off. The remaining capacity of this battery is checked by the absolute module approximately every 10 minutes and an alarm is released if a critical minimum limit is reached.	
Remedy:	Replace the battery on the absolute module (see SIPOS absolute encoder description)	

1200*	Index dimension wrong	POWER ON
Scan:	• Cyclic	
Effect:	• Interlocking of "NC START" • Machining is interrupted	
Explanation:	The "Index dimension from PLC" function is not possible because: • NC machine data "Number of divisions" has an invalid value • NC machine data "Absolute division increment" has an invalid value • NC machine data "Division offset" has an invalid value • Indexing axis has been defined as a rounding axis, which is impermissible.	
Remedy:	• Check and correct the relevant machine data.	

1204*	Traversing range limit exceeded	
Scan:	• Cyclic (only with linear axes)	
Effect:	• Interlocking of "NC START" • Machining is interrupted • Set value 0 (abrupt, no deceleration ramp)	
Explanation:	If no software limit switches and working area limitations are active, it is theoretically possible to exceed the maximum possible traversing range (set by the combination of axis-specific position control resolution and input resolution). As this would lead to traversing errors, however, the traversing range limit is monitored and, when it is exceeded, alarm 1204* is set.	
Remedy:	Traverse back into the permissible range in the opposite direction using INC or JOG mode.	

© Siemens AG 1990 All Rights Reserved

2000*	**Modulo value incorrect**	
Scan:	Cyclic	
Effect:	• Removal of NC START	
Explanation:	In the case of the spindle (e.g. synchronous spindle mode), a modulo value has been entered for the axis concerned which cannot be divided exactly into 360°, which means that the grid spacing is not equal.	
Remedy:	Check NC MD* 3440*	

2001*	**Speed setpoint warn limit activated**	
Scan:	• Cyclic	
Effect:	• Interlocking of "NC START"	
Explanation:	The setpoint on the digital-analog converter is higher than entered in NC MD 268* "Max. speed setpoint (DAC)". It is not possible to increase the setpoint any further.	
Remedy:	• Traverse at slower speed • Check the actual values (encoder) • Check NC MD "Max. speed setpoint (DAC)" • Check the drive actuator	

© Siemens AG 1990 All Rights Reserved

2003*	**Idle monitoring**	
Scan:	• When accelerating • On zero speed • On clamping • When braking (deceleration)	
Effect:	• Interlocking of "NC START" • Interlocking of "Mode group ready" • Setpoint 0 • Servo enable is removed after the time in NC MD "Cutout delay servo enable" has elapsed • Follow-up mode	
Explanation:	• During positioning, the following error could not be eliminated more quickly than the time entered in NC MD "Cutout delay servo enable" • On clamping, the limit defined in NC MD "Idle monitoring" was exceeded • The mechanically clamped axis has been pressed out of position • Errors in the actuator, tacho, motor, mechanical system, in the CNC measuring circuit hardware or on/in the encoder • On incorrect assignment of setpoint output • On start-up: incorrect position control direction	
Remedy:	• NC MD "Idle monitoring" must be greater than NC MD "Exact stop limit coarse" • NC MD "Cutout delay servo enable" must be large enough for the following error to be reduced within this time (only valid when NC MD "Delay idle monitoring" = 0) • NC MD "Delay idle monitoring" must be large enough for the following error of the individual axes to be reduced within the entered time • Check actual values (encoder) and position control direction.	

© Siemens AG 1990 All Rights Reserved

2007*	Measuring circuit not available	POWER ON
Scan:	• On POWER ON	
Effect:	• Axis is not processed • Servo disable of spindle concerned • Removal of "Mode group ready" • Interlocking of "NC START"	
Explanation:	• MD200* and/or MD384* indicates an empty submodule slot on a measuring circuit module with submodules. Example: MD3840 = 01090000, the first measuring circuit module is an HMS module with empty submodule slot 2. • Measuring circuit module has been removed or is defective.	
Remedy:	• Compare MD200* and/or MD384* with the hardware configuration and correct.	

2008*	Control loop spindle hardware	
Scan:	Cyclic	
Effect:	• Interlocking of "NC START" • Setpoint relay drops out, setpoint 0 • Removal of "Mode group ready" • Spindle servo enable is removed after the time in MD "Delay for servo enable" has elapsed.	
Explanation:	The measuring circuit difference signals • are not in phase • have a short circuit to ground • are absent	
Remedy:	• Check whether the measuring circuit connector is in position • The measuring circuit short circuit connector can be slotted in to check whether the measuring circuit module is functioning correctly. • Check the difference signals with the oscilloscope • Replace the encoder/cable	

© Siemens AG 1990 All Rights Reserved

2009*	Contamination measuring system spindle
Scan:	• Cyclic
Effect:	• Interlocking of "NC START" • Interlocking of "Mode group ready"
Explanation:	• Where measuring systems have a contamination signal (e.g. EXE) an error is sent to the NC from the measuring system.
Remedy:	• Check the measuring systems with the manufacturer's specifications.

2011*	Zero mark monitoring has responded
Scan:	• Cyclic, depending on the tolerance band set for the difference pulses
Effect:	• Interlocking of "NC START" • Machining stops
Explanation:	Pulses have been lost per encoder revolution, above the permitted tolerance band, due to transmission errors, interference or too high speed. The reference counter checks this zero mark.
Remedy:	• Check the encoder pulses and ascertain the permissible deviation • Check transmission path • Switch off monitoring temporarily by entering a value greater than 16 in the machine data.

2010*	Pulse coder monitoring
Scan:	Cyclic
Effect:	• Interlocking of "Mode group ready" • Interlocking of NC START • Alarm causes machining stop
Explanation:	• Transmission error or interference from pulse encoder
Remedy:	• Check encoder, cable, connecter

© Siemens AG 1990 All Rights Reserved

2014*	Speed setpoint alarm limit activated	
Scan:	Cyclic	
Effect:	• Interlocking of "NC START" • Interlocking of "Mode group ready" • Setpoint 0 • Servo enable is removed after the time in NC MD "Cutout delay servo enable" has elapsed • Follow-up mode	
Explanation:	• The control has output a higher speed setpoint than is defined in NC MD "Threshold for drive errors". • The motor could not follow the entered speed setpoint. • During start-up: incorrect position control direction.	
Remedy:	• Check whether the value in NC MD "Threshold for drive errors" is greater than the value in NC MD "Max. speed setpoint (DAC)" • Check the drive • Check position control direction • Check the speed setpoint cable • Check actual values (pulse encoder)	

2016*	Connection assigned more than once	POWER ON
Scan:	• During machine data input for spindle assignment	
Effect:	No processing of the spindles of which the corresponding connection number has been assigned more than once. • Servo disable for the spindle in question • Removal of "Mode group ready" • Interlocking of "NC Start"	
Explanation:	• A connection number of a measuring circuit module is entered several times in MD 200* and/or MD 384*. Example: MD 3840 = 01060000, MD 3845 = 01060000. Connection number 6 of the 1st measuring circuit module is thus assigned several times.	
Remedy:	• Check and correct MD 200* and/or MD 384*.	

© Siemens AG 1990 All Rights Reserved

2018*	Speed controller limitation
Scan:	Cyclic
Effect:	• Interlocking of "Mode group ready" • Interlocking of "NC START" • Alarm causes machining stop
Explanation:	• Speed controller limitation is triggered
Remedy:	• Check current control. Set speed control loop to a slower rate • Check SIMODRIVE • Check mechanical system

2019*	Parameterization error drive MD
Scan:	• On POWER ON or warm start
Effect:	• The spindles concerned are switched to follow-up mode • Machining stops • Interlocking of "NC Start" • "Mode group ready" removed
Explanation:	Input error in machine data, e.g. • Ratio of interpolator pulse to position control pulse in MD too large 160 > 80 • Internal servo gain factor too large resulting from input of – servo gain factor (252*) – multgain (260*) – pulse weighting • No integer ratio between entry in MD 165 (timing ratio) and MD 160 (fine interpolation), check MD 584* (designation of auxiliary axes) • Incorrect measuring system adaptation in MD 364* to MD 368* (values selected too large, e.g. instead of 1:1, 1 000 000:1 000 000 was chosen) • General parameterization error of a drive MD
Remedy:	• The pulse multiplication value entered for the high-resolution measuring system is impermissible. The following values are permissible: 1, 2, 4, 8, 16, 32, 64 and 128. The spindle service display displays the service number for parameterization errors and with it the exact cause.

© Siemens AG 1990 All Rights Reserved

2028*	**MD M19 not selected**
Scan:	When processing in AUTOMATIC mode or manual data input/automatic or external
Effect:	• Machining stops
Explanation:	"M19 S..." has been programmed in the part program although this function is not implemented in the control.
Remedy:	• Check program • Check NC MD

2030*	**Spindle speed too high**
Scan:	Only when NC MD "Pulse encoder available" is set
Effect:	• Machining stops • Interlocking of "NC START" • Interlocking of "Mode group ready"
Explanation:	The spindle speed is higher than defined in the machine data or setting data.
Remedy:	• Program smaller S value • NC MD "Max spindle speed for 1st to 8th gearing" • NC MD "Tolerance band of max. spindle speed" • NC MD "Max. spindle speed" • Check PLC gear speed • Check G92 S... at "v = constant" • Check setting data of spindle speed limitation • Program G26 S...

© Siemens AG 1990 All Rights Reserved

14.2 Dialog texts

14.2.1 Notes for the operator

With many operator inputs, texts are displayed in the left two thirds of the input line as support or for error diagnostics.

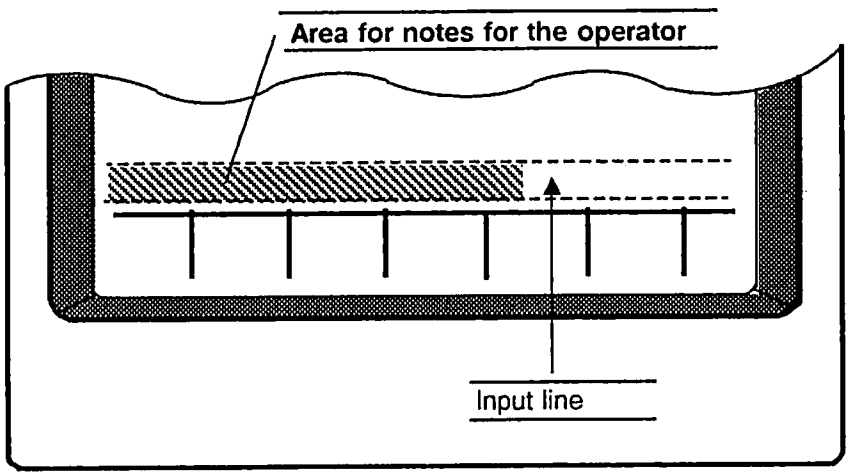

14.2.2 Listing of dialog texts

All notes for the operator are listed in the following table in alphabetical order.

Dialog text	Appears with the following event	What must be done or What is wrong
BLOCK NOT AVAILABLE	When searching for blocks in the part program	--
BLOCK NUMBER TOO LARGE	Generating block number	Block number cannot be greater than N9999
BLOCK STRUCTURE WRONG	With "Correction block" function	Cursor is at the start of the wrong block

© Siemens AG 1990 All Rights Reserved

Dialog text	Appears with the following event	What must be done or What is wrong
BLOCK TOO LONG	When editing part programs, a block must not be longer than 120 characters	Conclude block with "LF"
CHARACTER NOT ALLOWED	Taking over an input value (e.g. with the input key)	Input value has the wrong format
CHARACTER NOT AVAILABLE	When searching for characters in part programs	--
COMMENTS ERROR	Occurs when editing if the brackets do not match up	Check the number of brackets set
CYCLE DISABLE	When handling cycles (editing, copying, etc.)	Remove "Cycle disable" interface signal
CYCLE IN THE EPROM	Information while handling cycles	--
DATA TRANSMISSION RUNNING	Editing part programs	Stop interface
DECIMAL POINT NOT ALLOWED	Taking over an input value (e.g. with the input key)	--
DELETE DATA?	"Delete" key has been pressed	If pressed again the data area specified will be deleted
DIFFERENT PROGRAM TYPES	When copying or renaming part programs	Only identical program types (L to L, % to %, etc.) can be handled.
DRIFT COMPENSATION DATA ERROR	With semiautomatic drift compensation	Repeat compensation
EDITING NOT ALLOWED	When editing part programs	Repeat input
ENTER PASSWORD	When trying to enter protected data	Enter password
FORMAT ERROR	Taking over an input value (e.g. with the input key)	The control can do nothing with the value in this position. See Operator's Guide.
FORMAT ERROR IN DISPLAY DESCRIPTION	Cannot occur with the user. (Only possible with the machine manufacturer during UMS testing.)	A format has been specified in the display description which does not agree with that to be displayed.

© Siemens AG 1990 All Rights Reserved

Dialog text	Appears with the following event	What must be done or What is wrong
GENERAL DATA ERROR	Taking over an input value (e.g. with the input key)	The value cannot be taken over. Taking over the value would cause an error: change value.
GENERAL INPUT ERROR	Taking over an input value (e.g. with the input key)	The value was wrong. Change value.
HELP NOT AVAILABLE	Operating the "Help" key	No help is available for the display selected
INPUT DISABLED	Taking over an input value (e.g. with the input key)	Operate keyswitch
INPUT ERROR (PROGRAM)	When editing part programs	The character selected cannot be entered in the part program.
INPUT LINE OVERFLOW	Character input	Max. 25 characters
INTERFACE ASSIGNED	When starting data input/output	Selected interface is already operating
KEY NOT ALLOWED	Taking over an input value (e.g. with the input key)	Refers to input key and delete keys
KEYSWITCH MISSING	Selecting machine data tree or with general reset	Operate keyswitch
"MB" NOT CONFIGURED	When paging the menu tree	The menu block/tree is incorrectly configured
MD TRANSFER ERROR	Data error when fetching machine data	--
MDA CHANNEL ASSIGNED	MDA has already been started in another channel	Change channel or press "Reset"
MDA MEMORY OVERFLOW	In "MDA" mode	Max. 500 characters may be entered
NO CORRECTION BLOCK	With "Correction block" function	Correction block cannot be selected
NO RENAME FOR CYCLES	Renaming cycles is not possible	--
NO VALUE ENTERED	Taking over an input value (e.g. with the input key)	Input value has the wrong format
ONLY 1 PROG. NO. ALLOWED	With MOVE or RENAME or EXECUTE YES/NO, of a part program	--

© Siemens AG 1990 All Rights Reserved

Dialog text	Appears with the following event	What must be done or What is wrong
ONLY POSSIBLE AFTER "RESET"	When entering program numbers into the automatic basic display	The NC must be in the RESET state for safety reasons. Press RESET or wait until the current program is completed.
"OPERATOR PROMPT MACRO BLOCK" SEVERAL VALUES	When editing via screen forms using operator prompt macros	If several fields are bracketed together in the display, then only one of the values can be entered
"OPERATOR PROMPT MACRO BLOCK" TOO LONG	When editing using the screen form with the aid of the operator prompt macros	Operator prompt macro has been incorrectly configured
"OPERATOR PROMPT MACRO BLOCK" VALUE MISSING	When editing via screen forms using operator prompt macros	No value has been entered
OVERSTORAGE ACTIVE	When overstoring	Wait until previous overstore operation has been completed
PROGRAM ALREADY AVAILABLE	When opening part programs, copying, renaming	Select different number
PROGRAM ERASE PROTECTED	Renaming part program number Opening Reading in via RS232C (V.24) if already present and being executed.	Complete execution or reading in
PROGRAM MEMORY FULL	Inputting part programs manually or via RS232C (V.24)	On appearance of the message programs must be deleted.
PROGRAM NOT AVAILABLE	Taking over a part program number during part program handling	Correct number
PROGRAM NUMBER NOT ALLOWED	Part program handling	Change part program number
PROGRAM PRESELECTION FORBIDDEN (MODE)	Selecting program for editing in MDA mode	Change mode
PROGRAM PRESELECTION NOT ALLOWED	Part program selection during TEACH IN	Abort TEACH IN (RESET)
SELECT PROGRAM	Something is to be entered in a part program	Select part program

© Siemens AG 1990 All Rights Reserved

Dialog text	Appears with the following event	What must be done or What is wrong
SOURCE PROGRAM DEFECTIVE	Appears when reading out a part program	A bit has flipped in the part program just read (parity error).
SPECIFY 2 PROGRAM NUMBERS	When copying or renaming part programs	--
STOP AXES	The actual axis value is to be read	Axis values must not change.
STOP PROGRAM	Editing the program being processed	Interrupt program (NC STOP)
TOO MANY CHARACTERS ENTERED	Taking over an input value (e.g. with the input key)	Input value has the wrong format
TOOL NUMBER NOT ALLOWED	With functions operating with tool offsets	e.g. PRESET with a rotary axis: In the PRESET display "0" must be entered for the tool offset number
RS232C (V.24) CHANNEL ALREADY IN RESET	On stop or stop all in display Data input/output	A RESET request has already been sent. When the softkey is pressed again it is ignored.
RS232C (V.24) CHANNEL NUMBER NOT CORRECT	When starting data input/output	The RS232C (V.24) interface number is too large or too small
WRONG AXIS SPECIFIED	With axis-specific functions (e.g. Preset)	Axis does not exist
WRONG DATA NUMBER	When deleting data	Data item (e.g. R parameter) with the number entered does not exist
WRONG G FUNCTION	With technology-dependent functions	Correct G function
WRONG MODE GROUP	For functions which are assigned to a mode group (e.g. channel selection)	Select an alternative mode group
WRONG PASSWORD	Password input	--
WRONG RS232C (V.24) CHANNEL NUMBER	Starting data output	The RS232C (V.24) interface number is too large or too small

© Siemens AG 1990 All Rights Reserved

Dialog text	Appears with the following event	What must be done or What is wrong
WRONG VALUE ENTERED	When inputting into display screen forms (e.g. contour definition)	Change value
"-" NOT ALLOWED	Taking over an input value (e.g. with the input key)	Input value has wrong format
" =", " CR" IN WRONG PLACE	Taking over an input value (e.g. with the input key)	Input value has the wrong format
1ST NUMBER > 2ND NUMBER	Deleting data areas	The 1st number must be smaller than the 2nd
2ND DECIMAL POINT	Taking over an input value (e.g. with the input key)	Input value has the wrong format

© Siemens AG 1990 All Rights Reserved

15 Terms and Abbreviations

ADC	Analog-to-Digital Converter
AUT	AUTOMATIC → mode
BCD	Binary Coded Decimal
Block	A subdivision of a → part program
CC	→ Command channel
Command channel	The interface between the PLC and the NC, where the PLC can initiate functions on the NC and transfer user data (parameters) at the same time. The command channel is divided into 8 user interfaces so that up to 8 functions on the NC can be initiated quasi-parallel.
CPU	Central Processing Unit
DAC	Digital-to-Analog Converter
Data block	Block of data and/or signals. Data blocks are numbered to differentiate them. There are two sorts of data blocks: DB and DX. For further information see Configuring PLC 135 WB.
DB	Data block
DL	The left data byte of a data word. It is the data byte with the higher value
DPR	DUAL PORT RAM
DR	The right data byte of a data word. It is the data byte with the lower value
DW	Data word
DX	Type of → data block
EMERGENCY STOP	Deactivation of all NC functions by the operator in an emergency situation using a special EMERGENCY STOP switch.
Encoder	For the digital acquisition of the analog quantities "position" and "angle".
ELG	Electronic Gearbox
FA	Following Axis of an → ELG pair
FS	Following Spindle of a → pair of synchronous spindles
F word	Word (parameter) in the → part program. It specifies the feedrate.
G function	Preparatory function in the → part program
G group	Group of → G functions

© Siemens AG 1990 All Rights Reserved

Global axis No.
Global spindle No.
Internal numbering of axes and spindles each beginning with 1; the axis with the global axis No. 1 occupies the first axial machine data block (MD 2000,...)

Hardware reset
Reset of the entire control by switching the power supply off and on again

HMS
High-resolution measuring system

HMS Runup
Initialization of the control after switching off the power supply.

IAR
Integrated drive control system

Increment
Smallest unit of a numerical representation

Incremental
Specification of a dimension relative to a defined point as opposed to absolute dimensioning relative to a fixed zero.

Interface signal
Single bit or data which can be evaluated or modified by the → PLC user program.

Interpolator
The interpolator calculates the path points for the machining up to the target point programmed in the part program, with the programmed preparatory functions being taken into account. Each → NC channel has its own interpolator. In the spindle control system, the interpolator calculates the partial setpoints that are needed for driving through a preset angle.

IS
Interface Signal

JOG
→ Mode; manual operation with feedrate or rapid traverse rate by pressing direction keys.

Kü
Speed ratio of the leading spindle to the following spindle

KYRU
KEY REQUEST UNIT

LA
Leading Axis of an → ELG pair

LS
Leading Spindle of a → pair of synchronous spindles

Machine data
The machine data is for matching the NC to the machine tool. The values are determined and entered by the commissioning engineer. They are protected by a password.

MAP
Manufacturing Automation Protocol

MD
Machine Data

MDA
MDI AUTOMATIC → Mode

MD 123*
General notation for machine data existing separately for, say, each axis or spindle. The appropriate axis No. or spindle No. must be substituted for the asterisk. Axis or spindle number 1 is in the machine data numbered 0.

M decoding
Mechanism in the PLC by which the → M signals in the PLC are influenced by → M functions in the → part program.

© Siemens AG 1990 All Rights Reserved

Measuring system resolution

The resolution of the actual-value information comprising:
- Encoder increments
- Hardware multiplication
- Possible multiplication by → HMS

M function

Miscellaneous function for NC part programs. Some M functions have fixed meanings, others can be defined as required.

MMC

Man-machine communication

Mode

State of the control (not to be confused with → spindle mode). Different states permit different types of operation. The modes are:
- AUTOMATIC
- JOG
- MDI AUTOMATIC
- PRESET
- INC FEED 1...10 000
- REFPOINT
- REPOS

Mode group

Group of NC channels, axes and spindles, which always work together in the same → mode.

M signal

Signal in → data blocks which is influenced by → M functions programmed in the → part program.

M word

Word (parameter) in the → part program for a miscellaneous function.

NC channel

The NC area of the SINUMERIK 840 is subdivided into NC channels. Each NC channel has its own → block preparation for → part programs, an interpolator and an → interface for the → PLC.

NCK

Numerical control kernel

Option

An option is not included in the standard functionality of the SINUMERIK 840.

Part program

Program for the numerical control which controls machining of a workpiece.

Partial actual value

The "position" or "angle" moved and measured within one sampling interval.

Partial setpoint

The "position" or "angle" to be moved within one sampling interval.

PLC

Programmable Logic Control (or programmable controller); the interface between the SINUMERIK and the machine tool.

PLC user program

Program for the → PLC that adapts the SINUMERIK to the machine tool. This program is written by the machine manufacturer.

RAM

Random Access Memory; memory which can be both read and written.

Reference point

Reference point on the machine for the measuring system.

© Siemens AG 1990 All Rights Reserved

Reset

A reset is initiated by pressing the reset key or by the reset interface signal. Execution of the part program is then aborted, alarms are cleared and the control enters the → reset state.

Reset state

This state is entered when a → reset is initiated. In the reset state the following applies:
- The control remains in synchronism with the machine.
- All buffers and the main memory are cleared.
- The contents of the part program memory are left intact.
- The control is in the initial setting and ready for program execution.

ROM

Read Only Memory; memory which can only be read.

SBC

Single-board computer

Setting data

Setting data, like the → machine data, define operating states. Unlike machine data, setting data are not protected by a password and can be modified by the operator. Examples: setting data for zero offsets, scale modifications, speed limits.

Softkey

The key under the display screen on the control panel which can be used for different purposes.

Spindle mode

State of the spindle control
(not to be confused with → modes of the NC control);
possible states:
- Open-loop control mode
- Oscillation mode
- Positioning mode
- C axis mode
- Synchronous mode

Synchronous spindles

A pair of spindles which turn in synchronism
(→ synchronous mode, → spindle mode).

Speed ratio parameters

Numerator and denominator of the speed ratio → Kü

tsr

Abbreviation for "through several revolutions"
(used in connection with M19, for example).

© Siemens AG 1990 All Rights Reserved

Siemens AG

AUT V250
P.O. Box 48 48
W-8500 Nuremberg 1
Federal Republic of Germany

Suggestions

Corrections

For Publication/Manual:

SINUMERIK 840
Software Versions 1 and 2
Installation Instructions
Installation Guide

Service Documentation

Order No.: 6ZB5 410-0EN02-0AA2
Edition: March 1992

From:

Name _____

Company/Dept. _____

Address _____

Telephone /

Should you come across any printing errors when reading this publication, please notify us on this sheet. Suggestions for improvement are also welcome.

Suggestions and/or corrections

Siemens AG
Automation Group
Automation Systems
for Machine Tools, Robots
and Special-Purpose Machines
P.O. Box 48 48, W-8500 Nuremberg 1
Federal Republic of Germany

Siemens Aktiengesellschaft

© Siemens AG 1990 All Rights Reserved
Subject to change without prior notice

Order No.: 6ZB5 410-0EN02-0AA2
Printed in the Federal Republic of Germany
251/222405 - 908530 - IA 09920.15

Progress
in Automation.
Siemens