SIEMENS
Ingenuity for life

Safety related shutdown of the power supply of functionally non-safe standard modules

Wiring Examples

https://support.industry.siemens.com/cs/ww/en/view/39198632

Siemens Industry Online Support

This entry is from the Siemens Industry Online Support. The general terms of use (http://www.siemens.com/terms_of_use) apply.

Security Information

Siemens provides products and solutions with industrial security functions that support the secure operation of plants, solutions, machines, equipment and/or networks. They are important components in a holistic industrial security concept. With this in mind, Siemens' products and solutions undergo continuous development. Siemens recommends strongly that you regularly check for product updates.

For the secure operation of Siemens products and solutions, it is necessary to take suitable preventive action (cell protection concept, for example) and integrate each component into a holistic, state-of-the-art industrial security concept. Third-party products that may be in use should also be considered. For more information about industrial security, visit http://www.siemens.com/industrialsecurity.

To stay informed about product updates as they occur, sign up for a product-specific newsletter. For more information, visit http://support.industry.siemens.com.

© Siemens AG 2023 All rights reserved

Question

How do you implement safety related shutdown of the power supply of functionally non-safe standard modules?

Answer

The relevant SIMATIC standard output modules are listed on the HTML page of this entry. The associated wiring examples are given in this document.

Contents

1 Requirements to be met for the application 4

2 Examples with ET 200SP 6

2.1 Via F-PM-E pm Switching 6
2.2 Via F-PM-E pp Switching 7
2.3 Via Safety Relay 8

3 Example with ET 200MP / S7-1500 9

4 Examples with ET 200eco PN 11

4.1 Via Safety Relay 12
4.2 Via ET 200S PM-E F pm Switching 13
4.3 Via ET 200S 4F-DO and 1F-RO pm Switching 14
4.4 Via ET 200S PM-E F pp Switching 15
4.5 Via ET 200S 4F-DO and External Safety Relay pm Switching 16
4.6 Via ET 200S 4F-DO and External Safety Relay pp Switching 17
4.7 Via Power Distributor 18
4.8 ET 200eco PN M12-L via Safety Relay 19
4.9 ET 200eco PN M12-L via ET200SP F-PM-E pm-Switching 20

5 Example with ET 200AL 21

5.1 ET 200AL with standard modules 21
5.2 ET 200AL with IO-Link IO-modules 22

6 Examples with ET 200pro 23

6.1 Via Safety Relay 23
6.2 Via F-Switch PROFIsafe 24

7 Examples with ET 200M / S7-300 25

7.1 Via Safety Relay 25
7.2 Via ET 200S F-DO and External Safety Relay PM switching 26
7.3 Via ET 200S F-DO and External Safety Relay PP switching 27
7.4 Via ET 200S F-DO and 1F-RO PM switching 28
7.5 Via ET 200S PM-E F PM switching 29
7.6 Via ET 200S PM-E F PP Switching 30

8 Examples with ET 200S 31

8.1 Via Safety Relay 31
8.2 Via ET 200S F-DO DC24V and ET 200S F-RO 32
8.3 Via ET 200S PM-E F pm DC24V 33
8.4 ET 200S PM-E F pp switching off standard modules 34
8.5 ET 200S PM-E F pm switching off standard modules 35

© Siemens AG 2023 All rights reserved

1 Requirements to be met for the application

⚠ **WARNING**	**The given SILCL and PL for the application examples mentioned in this document can only be reached if the following preconditions are met.**

Limits of the Higher-level Safety Circuit

The standard modules used in this application do not perform safety functions themselves. Safety functions are executed by the safety modules/relays to bring the system to a safe state.
The testing interval of the safety switching device with relay output must be considered according to the safety class.
The operating instructions of the used safety relay (e.g. 3SK..) has to be considered. (concerning limits for e.g. capacity, load current,…)

Dangerous errors in the safety function, which cannot be detected by the higher-level safety circuit (e.g. safety relay) must be covered by appropriate safety measures. The "diagnosis" must be done indirectly via the controlled process.

As soon as an additional energy is used to control the safety function, which is not provided by the higher-level safety circuit, the following measures must be taken.

The safety-relevant process data must be

- functionally safe
- read via fail-safe inputs (e.g. F-DI),
- processed by a fail-safe processing unit (e.g. F-CPU) to output commands and
- outputted by fail-safe outputs (e.g. F-DQ) for controlling the corresponding safety function.

If the expected behavior is not fulfilled by the process side (either because of a process error or because of defective standard modules), the standard outputs are to be brought into a safe state by the higher-level safety circuit.

In particular, you must take the fault tolerance time of the process into account here.

Requirements for the Supply Voltage

Operation requires a safe power supply for controlling overvoltage’s on L+ and M (24V). This measure controls, at the same time, possible common cause errors from the power supply side.

The power supply must be selected according to the requirements in the respective operation instructions for the switch-off device and the used ET 200 system.

Further information about safety extra low voltage (SELV) and protected extra low voltage (PELV) is provided in the data sheets of the power supplies to be used.

© Siemens AG 2023 All rights reserved

Safe electrical isolation

If the actuators switch voltages greater than 24 V DC (for example, 230 V AC), safe electrical isolation must be ensured between the outputs of a fail-safe output module and the components carrying a higher voltage.

Requirement regarding PP Switch Off:

When employing PP Switch Off, measures must be taken to protect the wiring from the PP output via all standard modules in the switch-off group to the actuator against short circuits to wires still active after safe switch off. Otherwise a safe switch off cannot be guaranteed.
Measures for short circuit proof wiring are given in EN 60204-1.

Note regarding the digital output modules with relay

To achieve safe state normally open contacts with DC=0% are used. According to EN ISO 13849-2:2012, D.9, fault exclusion is not possible. Contacts may remain in the energized position in case of a failure (e.g. welded contact or mechanical fault) also when the coil is de-energized by safety shut-off device.

The applied relay contacts must be monitored with a minimum equivalent safety level.

© Siemens AG 2023 All rights reserved

Use of IO-Link devices

Note that in order to use safety-related shutdown, the IO-Link device must have proper safety characteristic values for the application.

Requirement for sensors and actors

To achieve the respective safety class, suitably qualified sensors and actuators are necessary.

Requirement regarding the used standard modules

Only modules listed in the FAQ 39198632 may be used for applications with safety-related shutdown of SIMATIC standard modules.

2 Examples with ET 200SP

2.1 Via F-PM-E pm Switching

Figure 2-1: Safety Related Shutdown application with F-PM-E pm switching

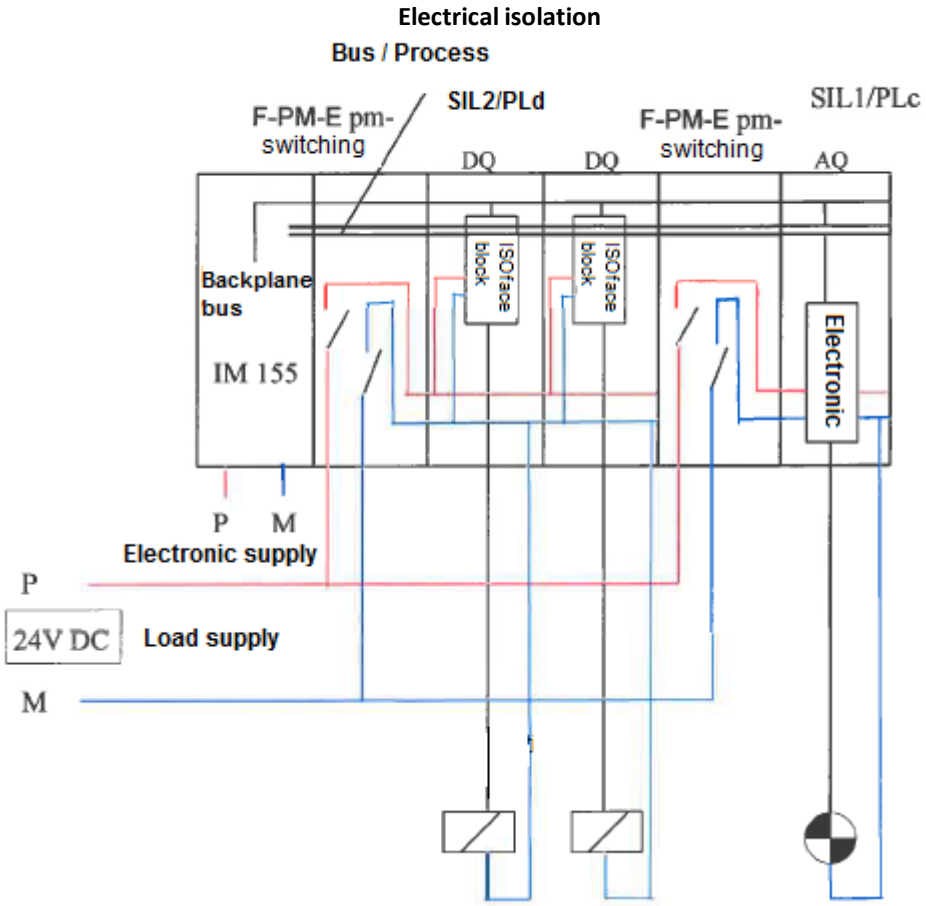

Note

SIL1/Cat.2/PLc and SIL2/Cat.3/PLd applications can also be realized with just one F-PM-E together in one voltage segment.

© Siemens AG 2023 All rights reserved

2.2 Via F-PM-E pp Switching

Figure 2-2 Safety Related Shutdown application with F-PM-E pp switching

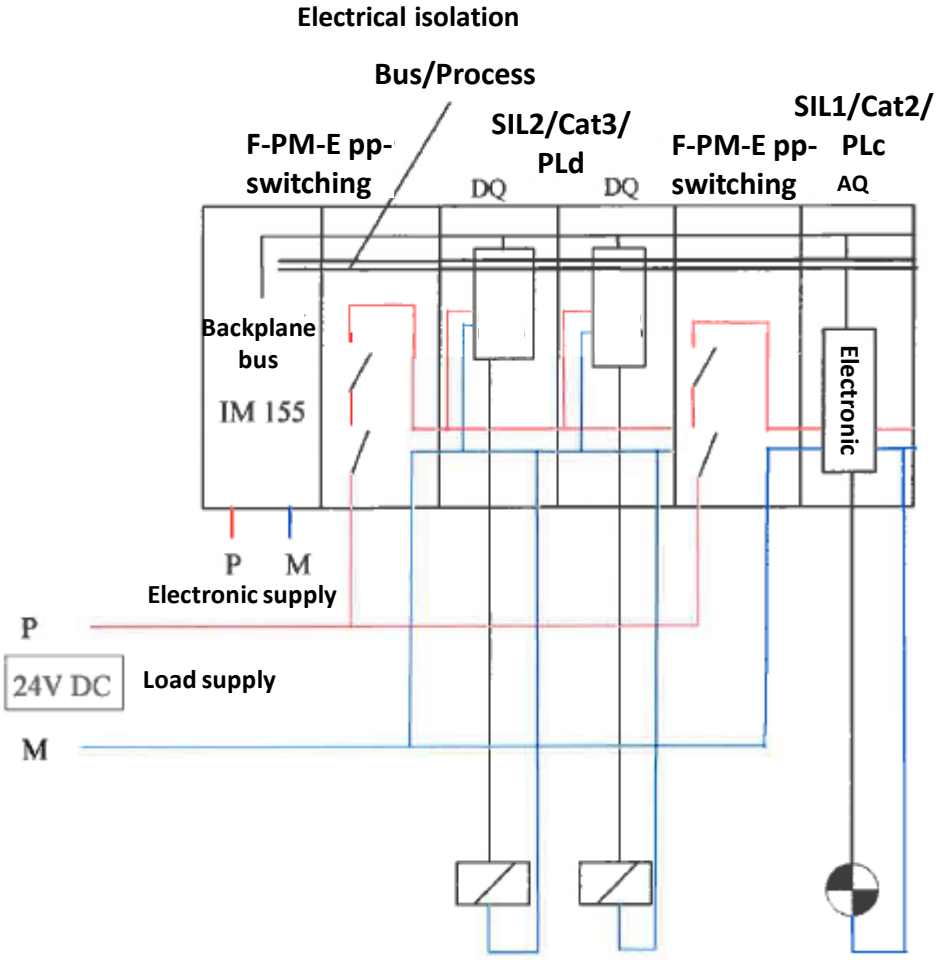

Note SIL1/Cat.2/PLc and SIL2/Cat.3/PLd applications can also be realized with just one F-PM-E together in one voltage segment.

© Siemens AG 2023 All rights reserved

2.3 Via Safety Relay

Figure 2-3 Safety Related Shutdown application with safety relay (PM switching)

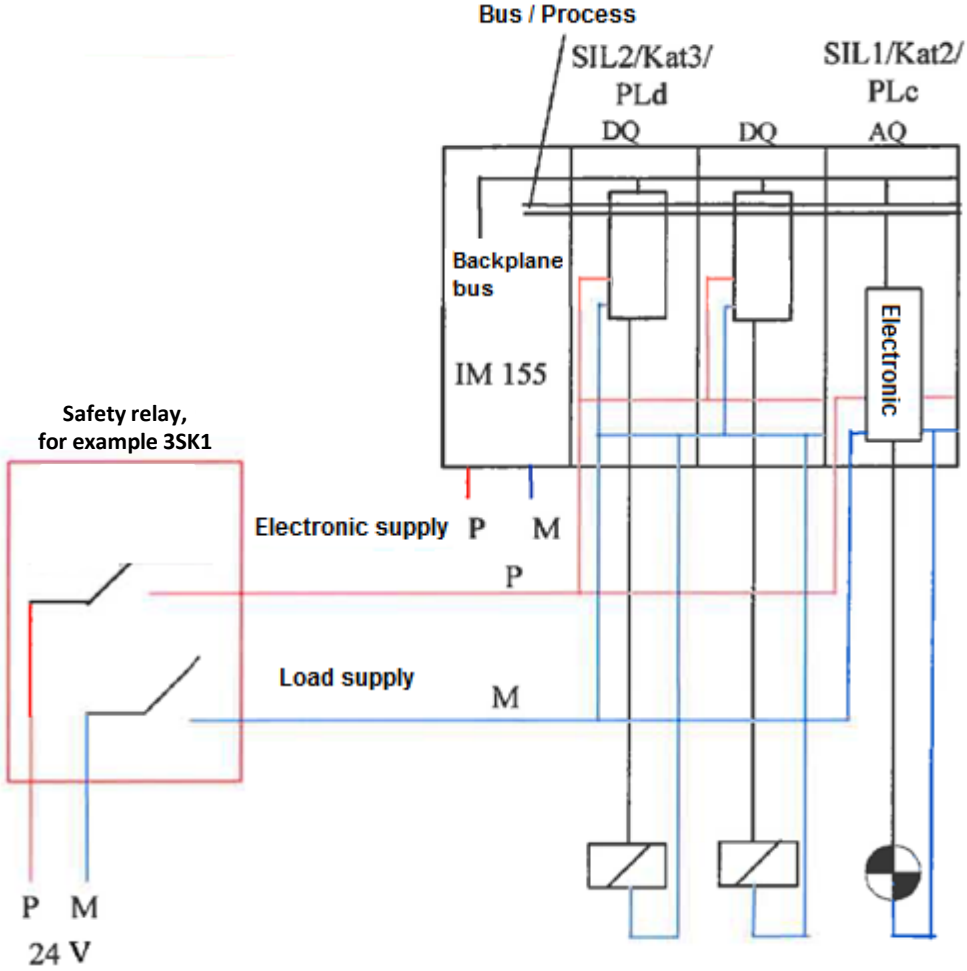

© Siemens AG 2023 All rights reserved

3 Example with ET 200MP / S7-1500

As an example, the digital output modules DQ 32xDC24V and DQ 8xDC24V, combined with DI 16x24VDC/DQ 16x24VDC, AQ 8xU/I and DQ 8x230VAC ST (Relay) were used.

Here, all digital and analog outputs of the ET 200MP modules that are supplied by a safety relay with the load voltage supply (1L+/2L+/3L+/4L+) and 1M/2M/3M/4M are switched off simultaneously, depending on the safety relay, with up to SIL2/Cat.3/PL d. This refers only to the outputs marked with the color “yellow”.

Relay outputs of the ET 200MP modules that are supplied by means of a safety relay with the load voltage supply (1L+) and 1M are switched off simultaneously, depending on the safety relay, with up to SIL1/Cat.2/PL c. This refers only to the output marked with the color “green”.

⚠ **WARNING**	**Note regarding the digital input-output module** The digital Inputs of the DI 16x24VDC/DQ 16x24VDC/ 0.5A BA (6ES7 523-1BL00-0AA0) are not safety related and may not be used in connection with safety related shutdown applications. For read back applications only fail-safe input modules with a minimum equivalent safety level are permitted. The power supplies of the digital inputs must be potential-free towards digital outputs power supply.

© Siemens AG 2023 All rights reserved

Figure 3-1 Safety Related Shutdown application with safety relay (PM switching)

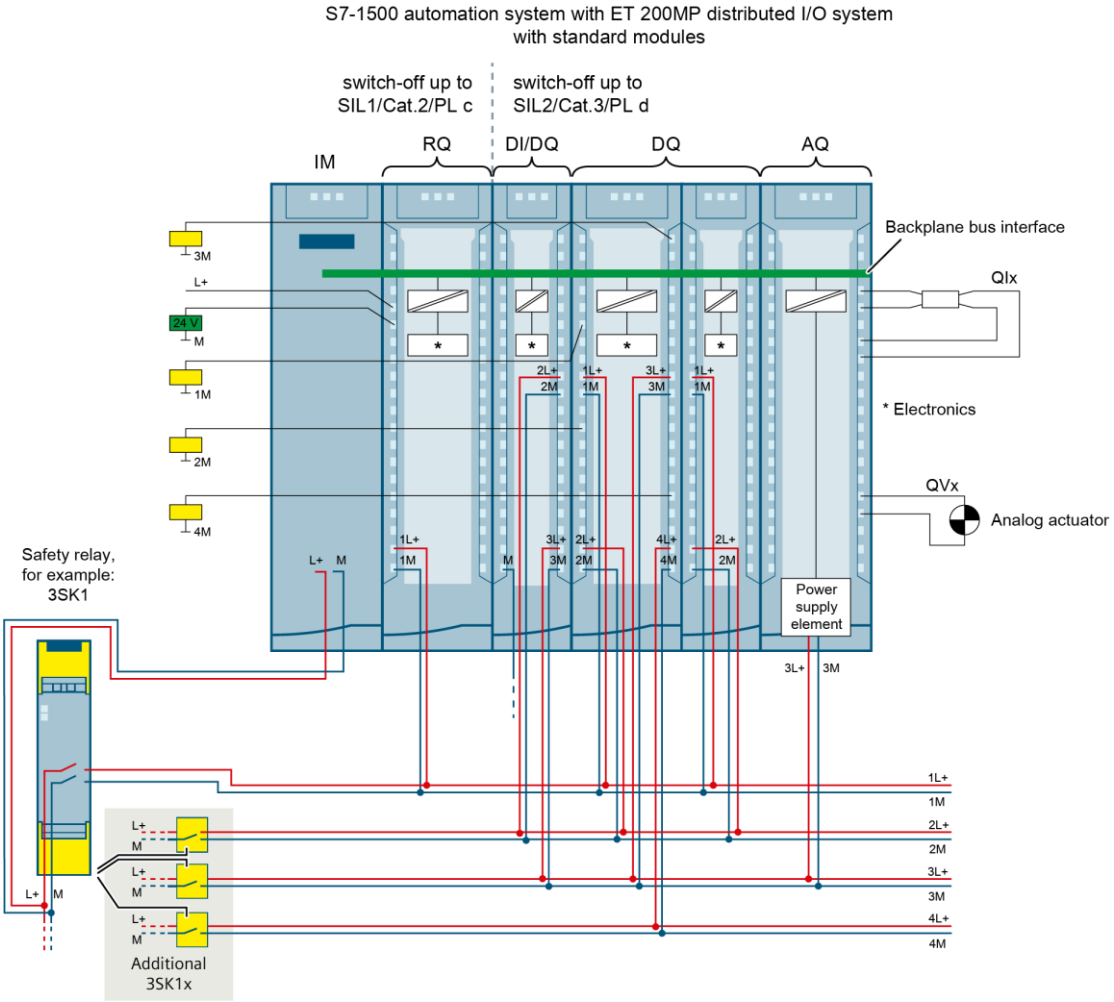

© Siemens AG 2023 All rights reserved

4 Examples with ET 200eco PN

WARNING	**Note potential groups for safety-related shutdown** When a digital output is connected to a digital input, pay attention to the potential groups. Depending on the configuration, 1M and 2M can then be connected, which leads to elimination of the electrical isolation between 1L+ and 2L+.The safety-related shutdown is not permitted if the electrical isolation is eliminated. In the structure of your I/O-system you can also integrate I/O modules that are operated exclusively on the 1L+ and 1M (non-switched) power supply. These I/O modules must be released as non-interacting modules. These I/O modules are not affected by a safety related shutdown, they forward the supply 2L+ and 2M (switched). **24 V encoder supply 2US for DIQ channels** Use only the 24 V encoder supply 2US provided by the I/O device to supply power to the encoders for DIQ channels. If you use a different encoder supply, then cancel the potential separation of the whole safety circuit. This way you can establish a safe state in the entire system.

NOTICE	**IO-Link Master 4 IO-L 4×M12;** **CM 8x IO-Link + DI 4x24VDC M12-L 8xM12** For an IO-Link master with IO-Link Port Class B, safety-related shutdown is available for the additional supply (PIN 2 and PIN 5). The other signals at the port are reaction-free.

The load voltage supply lines 2L+ and 2M are switched off simultaneously, depending on the higher level safety shutdown device, with up to SIL 2 / Cat. 3 / PL d.
This refers only to the outputs marked with the color “yellow” in the following figures.

The digital outputs connected to the 1L+ and 1M (24V Non-Switched) supply are intended for operational switching and cannot be used for safety related shutdown applications.

The IO-Link functionality is a special case. Here you can do a safety related shutdown of the additional load supply.
The IO-Link supply of the IO-Link devices is "non-interacting" or “reaction free”. This ensures that the IO-Link communication with the IO-Link device continues if there is a switch-off.

© Siemens AG 2023 All rights reserved

4.1 Via Safety Relay

Figure 4-1 Safety Related Shutdown Application with safety relay (PM switching)

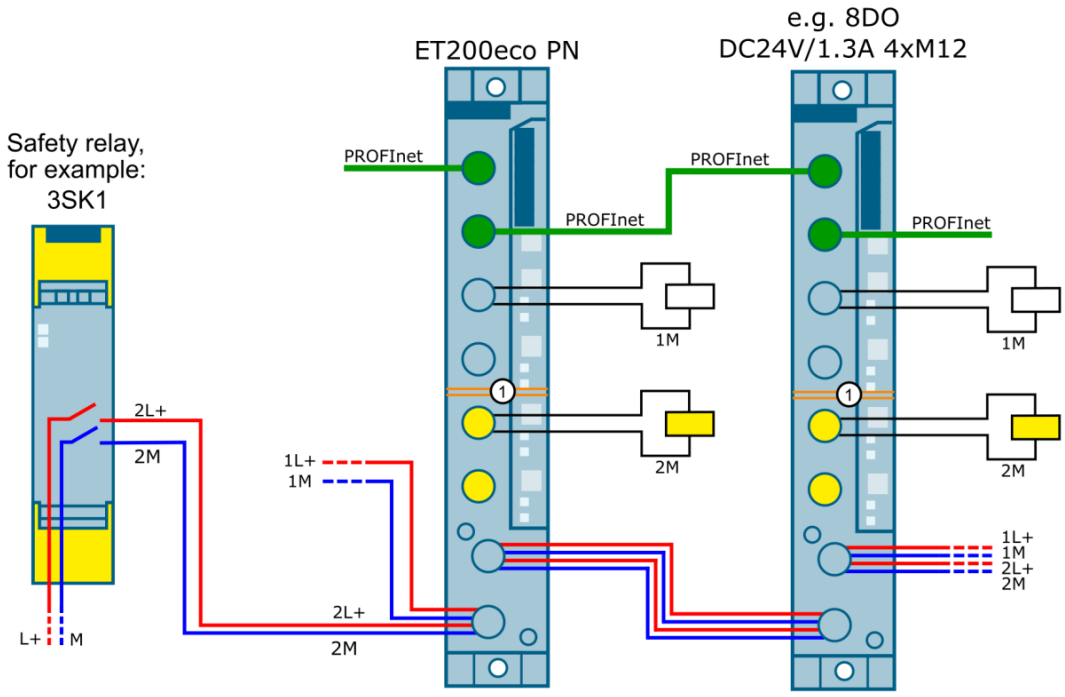

①: isolation

© Siemens AG 2023 All rights reserved

4.2 Via ET 200S PM-E F pm Switching

Figure 4-2 Safety Related Shutdown application with ET 200S PM-E F pm switching

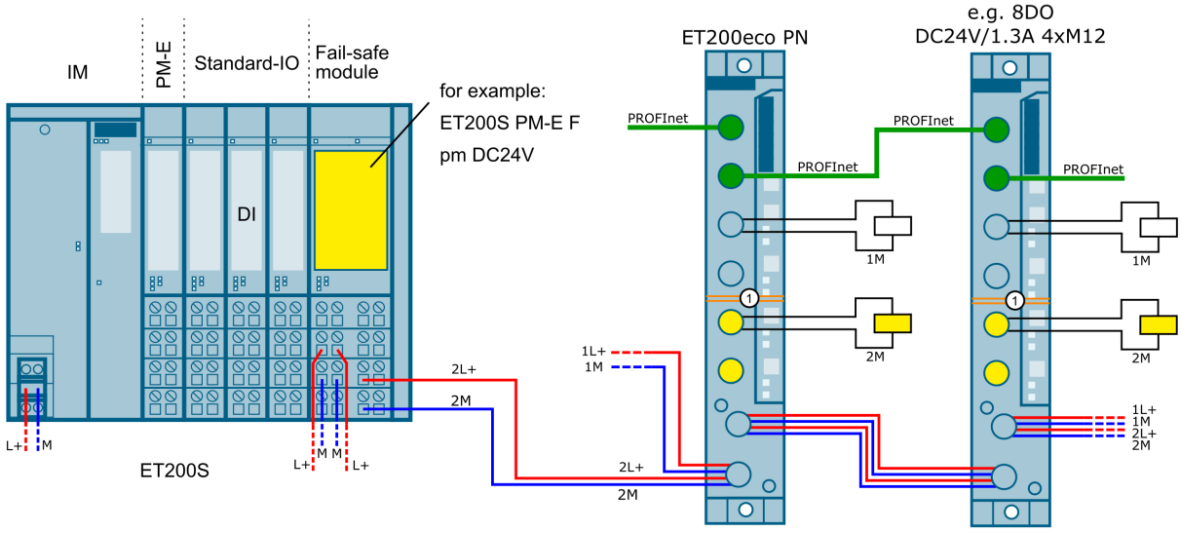

①: isolation

© Siemens AG 2023 All rights reserved

4.3 Via ET 200S 4F-DO and 1F-RO pm Switching

Figure 4-3 Safety Related Shutdown application with 4F-DO and 1F-RO pm switching

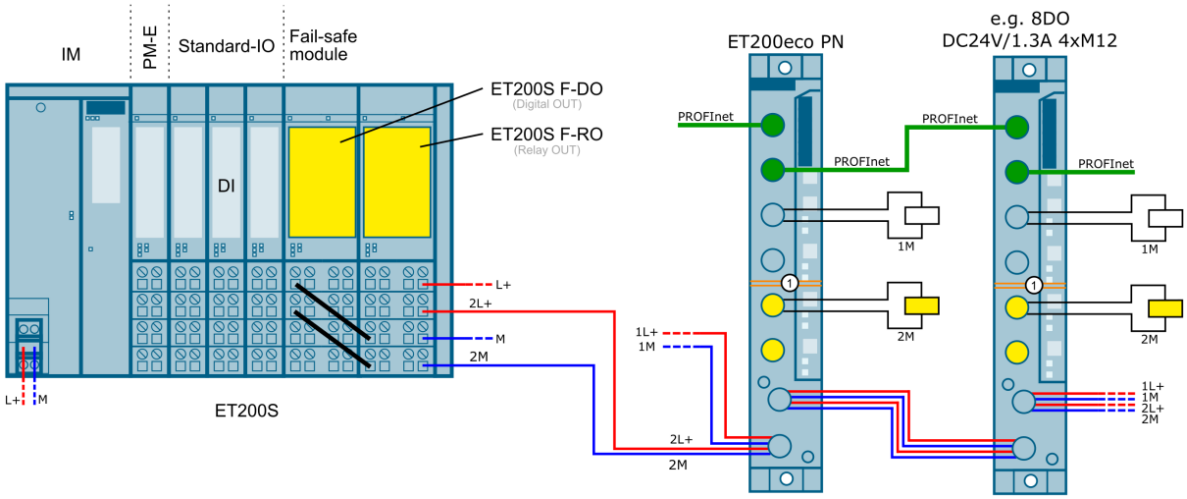

①: isolation

© Siemens AG 2023 All rights reserved

4.4 Via ET 200S PM-E F pp Switching

Figure 4-4 Safety Related Shutdown application with ET 200S PM-E F pp switching

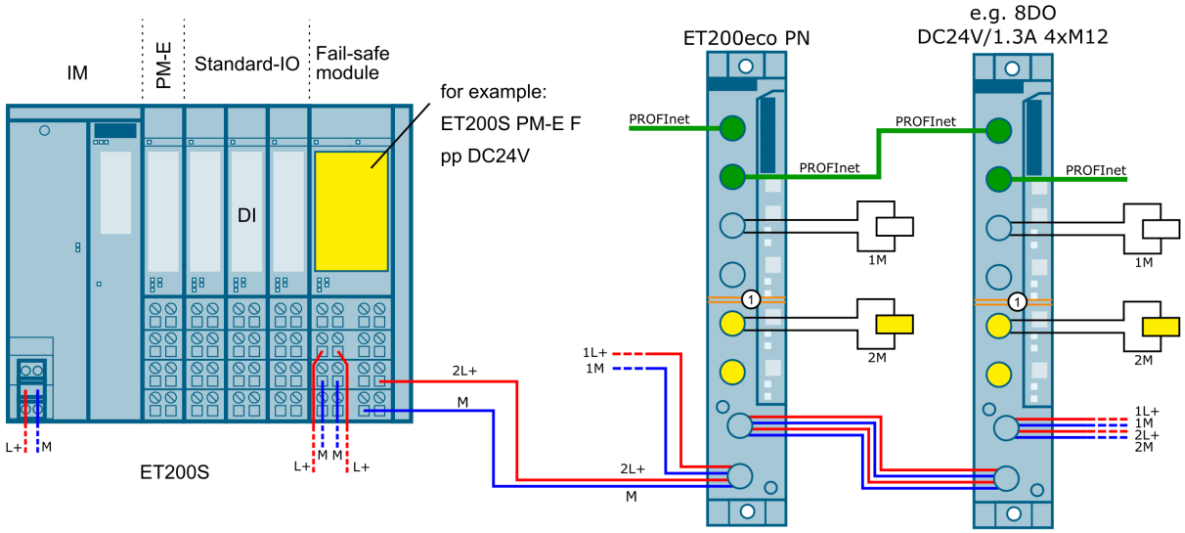

①: isolation

© Siemens AG 2023 All rights reserved

4.5 Via ET 200S 4F-DO and External Safety Relay pm Switching

Figure 4-5 Safety Related Shutdown application with 4F-DO and external safety relay pm switching

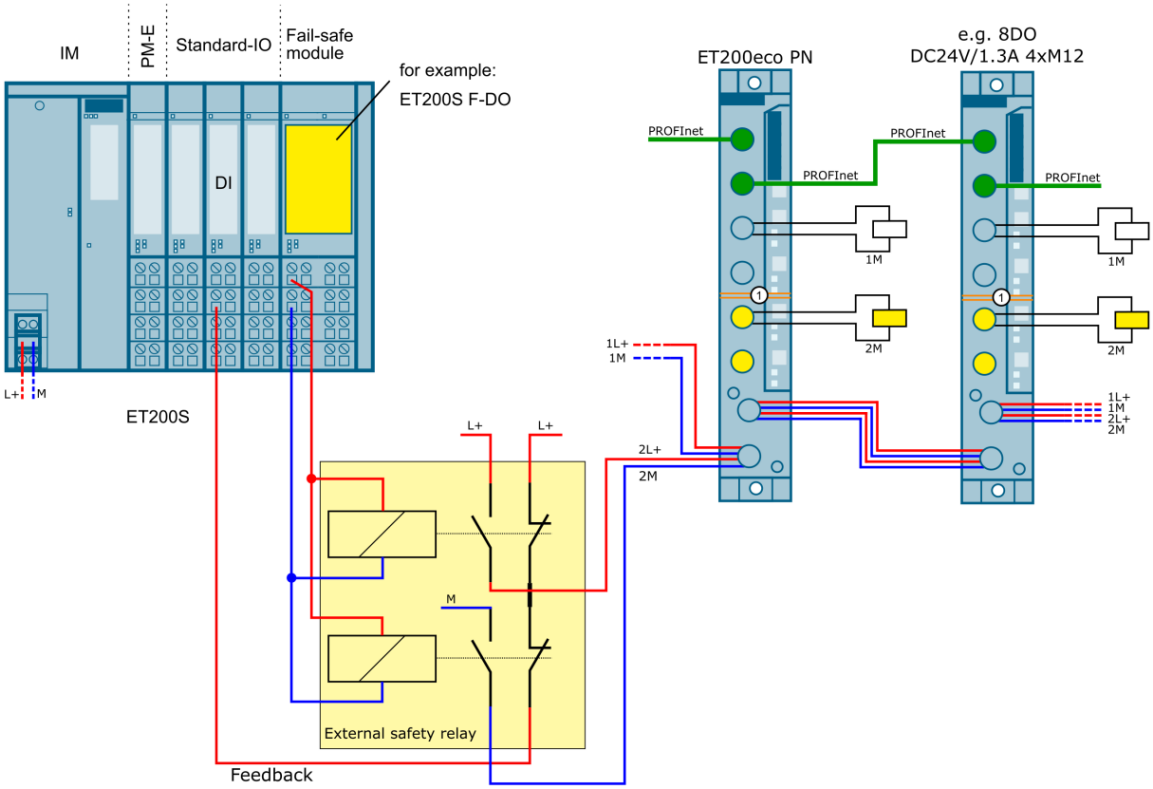

①: isolation

© Siemens AG 2023 All rights reserved

4.6 Via ET 200S 4F-DO and External Safety Relay pp Switching

Figure 4-6 Safety Related Shutdown application with 4F-DO and external safety relay pp switching

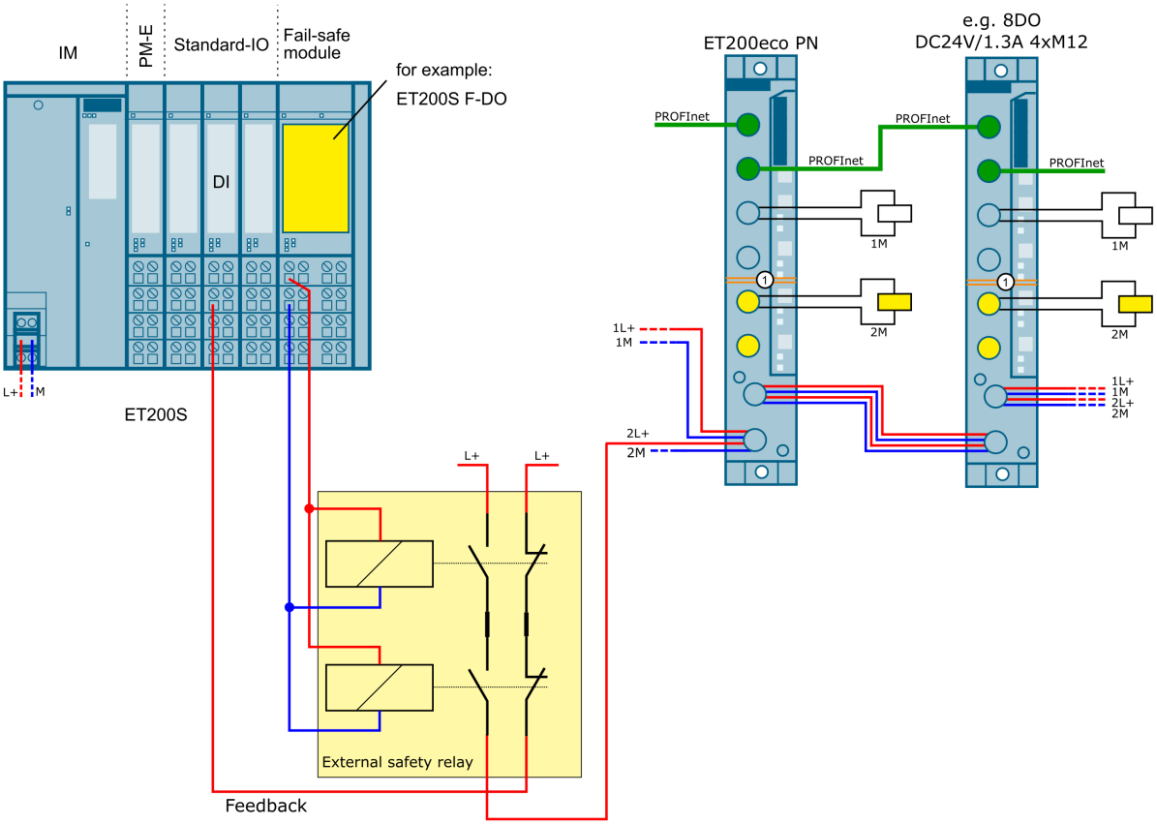

①: isolation

© Siemens AG 2023 All rights reserved

4.7 Via Power Distributor

Figure 4-7 Safety Related Shutdown application using ET 200S PM-E F pm DC24V and ET 200eco PN Power Distributor PD DC 24V

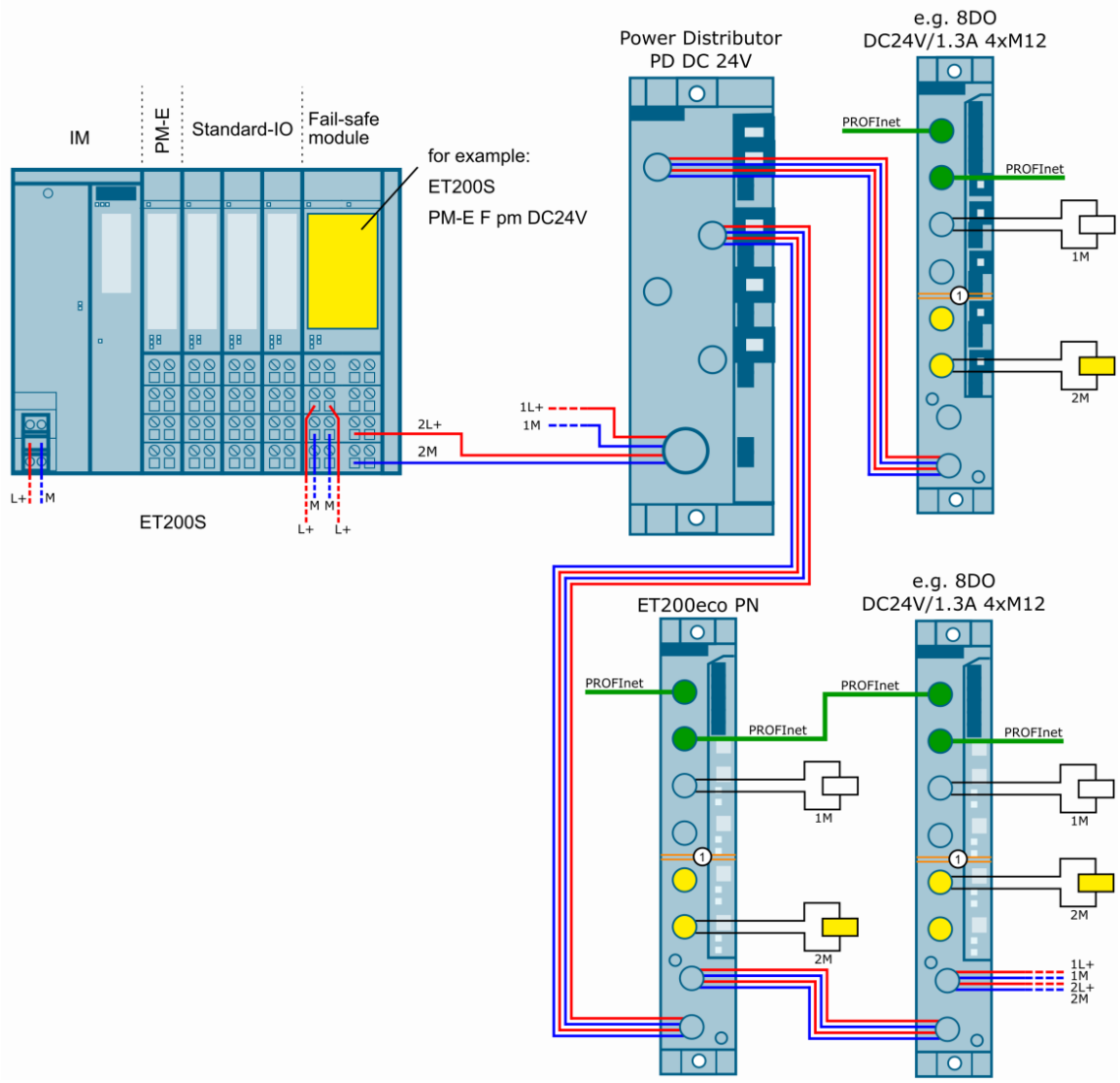

①: isolation

© Siemens AG 2023 All rights reserved

4.8 ET 200eco PN M12-L via Safety Relay

Figure 4-8 Safety Related Shutdown application using ET 200eco PN M12-L and a safety relay

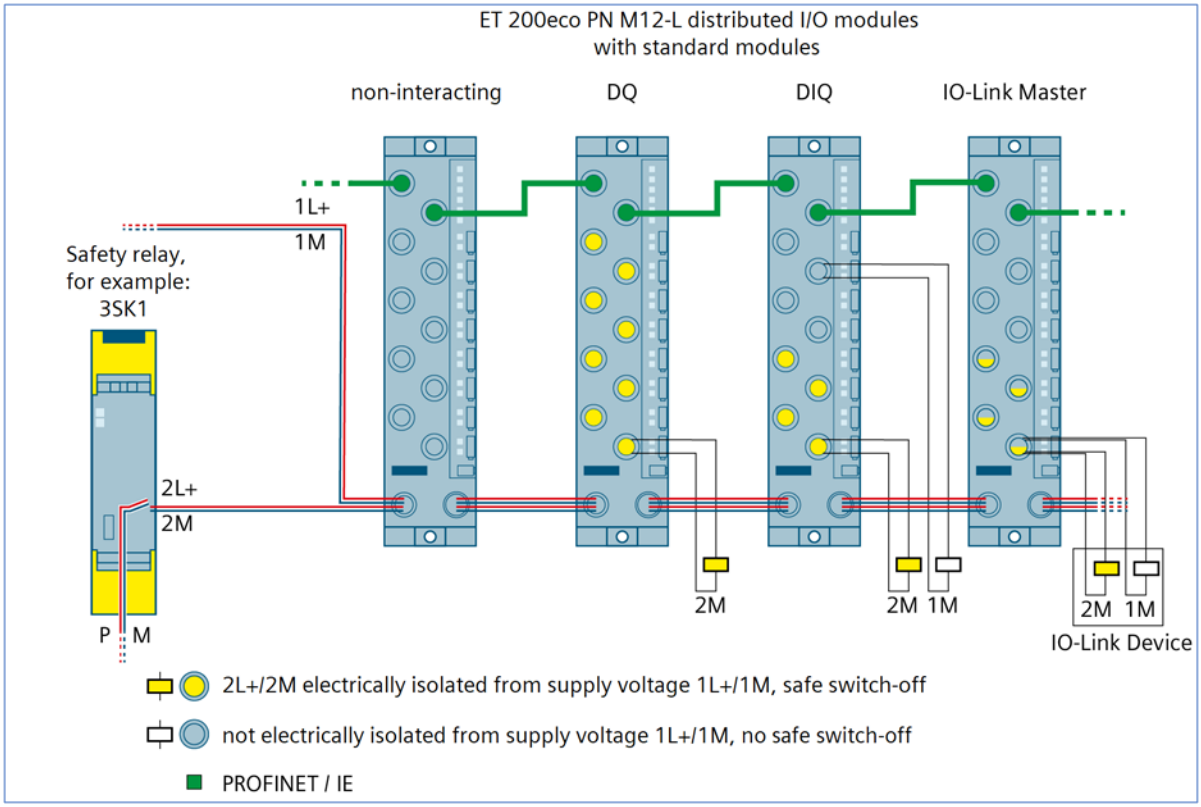

© Siemens AG 2023 All rights reserved

4.9 ET 200eco PN M12-L via ET200SP F-PM-E pm-Switching

Figure 4-9 Safety Related Shutdown application using ET 200eco PN M12-L and a ET200SP F-PM-E pm-switching

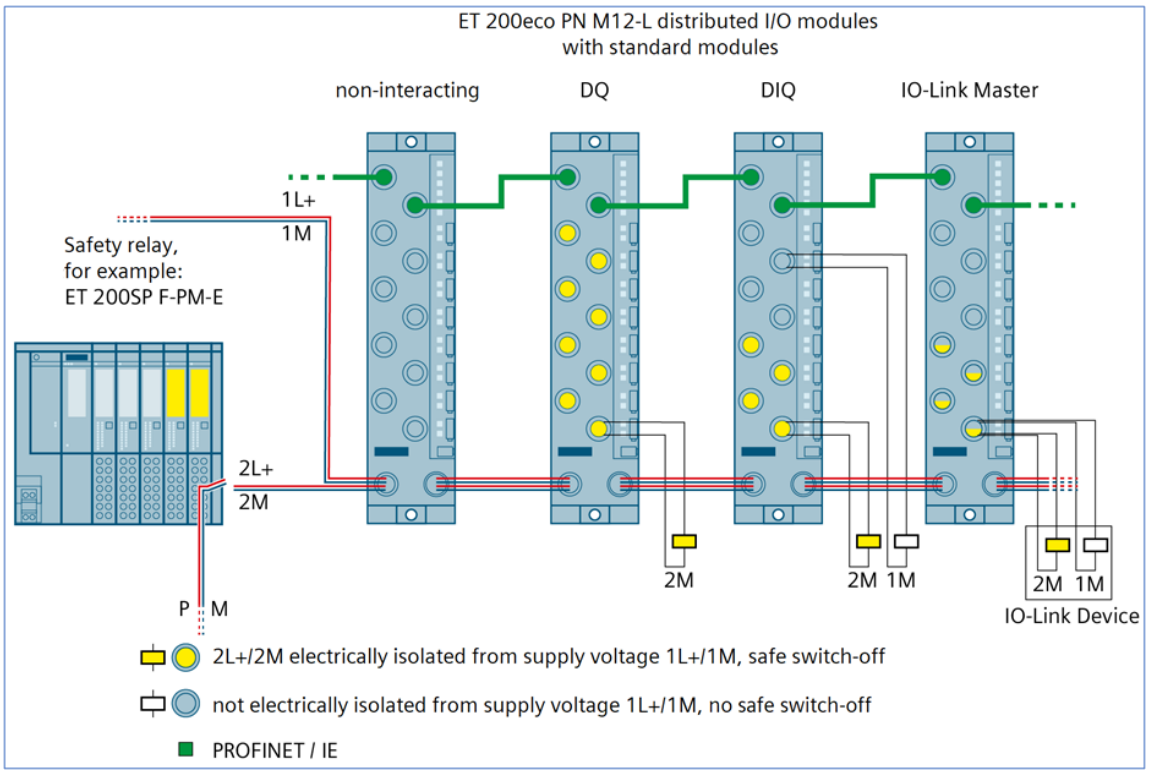

© Siemens AG 2023 All rights reserved

Settings for ET 200SP F-PM-E

Consider the entire system when making settings and planning. Here is a small excerpt of settings.

- Operation only as PM-switching module

- Deactivation of dark test (max. SIL 2, Cat.3/PL d), as the outputs drop briefly during the dark test.

- Switching of capacitive loads:

Follow the information in the chapter "Switching capacitive loads" in the device manual Power module F-PM-E 24VDC/8A PPM ST (https://support.industry.siemens.com/cs/ww/en/view/78645796)

5 Example with ET 200AL

WARNING

In applications of safety related shutdown, it is generally not allowed to connect a digital output and a digital input between any ET 200AL modules.

The ET 200AL standard modules, listed in the FAQ 39198632 and marked as non-interacting can be used in a serial configuration.

CM 4xIO-LINK, 4xM12
For an IO-Link master with IO-Link Port Class B, safety-related shutdown is available for the additional supply (PIN 2 and PIN 5).

The IO-Link functionality is reaction free

5.1 ET 200AL with standard modules

Here, all yellow marked outputs of the ET 200AL modules are supplied by means of a safety switch. The load voltage supply lines 2L+ and 2M are switched off simultaneously, depending on the safety switch, with up to SIL2/Cat.3/PL d.

© Siemens AG 2023 All rights reserved

Figure 5-1 Safety Related Shutdown application with safety relay (PM switching) for standard modules

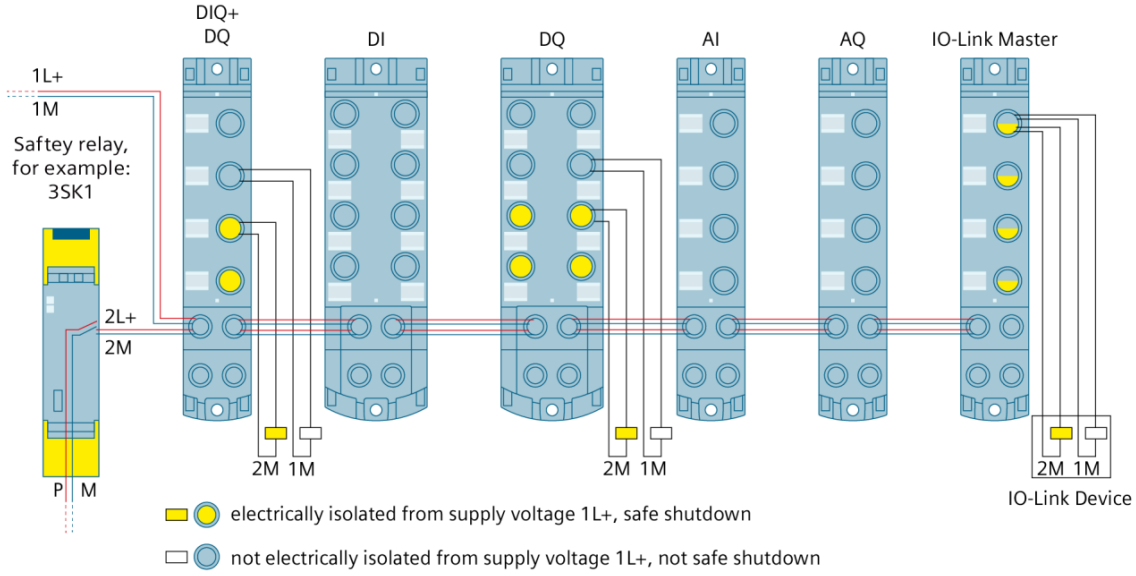

5.2 ET 200AL with IO-Link IO-modules

There are 2 ways to connect the supply voltage 2L+ and 2M to an IO-Link module. Via the IO-Link Master Port Class B or via the M12-L connector for the supply voltage.

The IO-Link DI modules have no connection to 2L+.

The arrangement shown here meets the requirements for safety related shutdown up to SIL2 /Cat.3/PL d.

Figure 5-2 Safety Related Shutdown application with safety relay (PM switching) for IO-Link modules

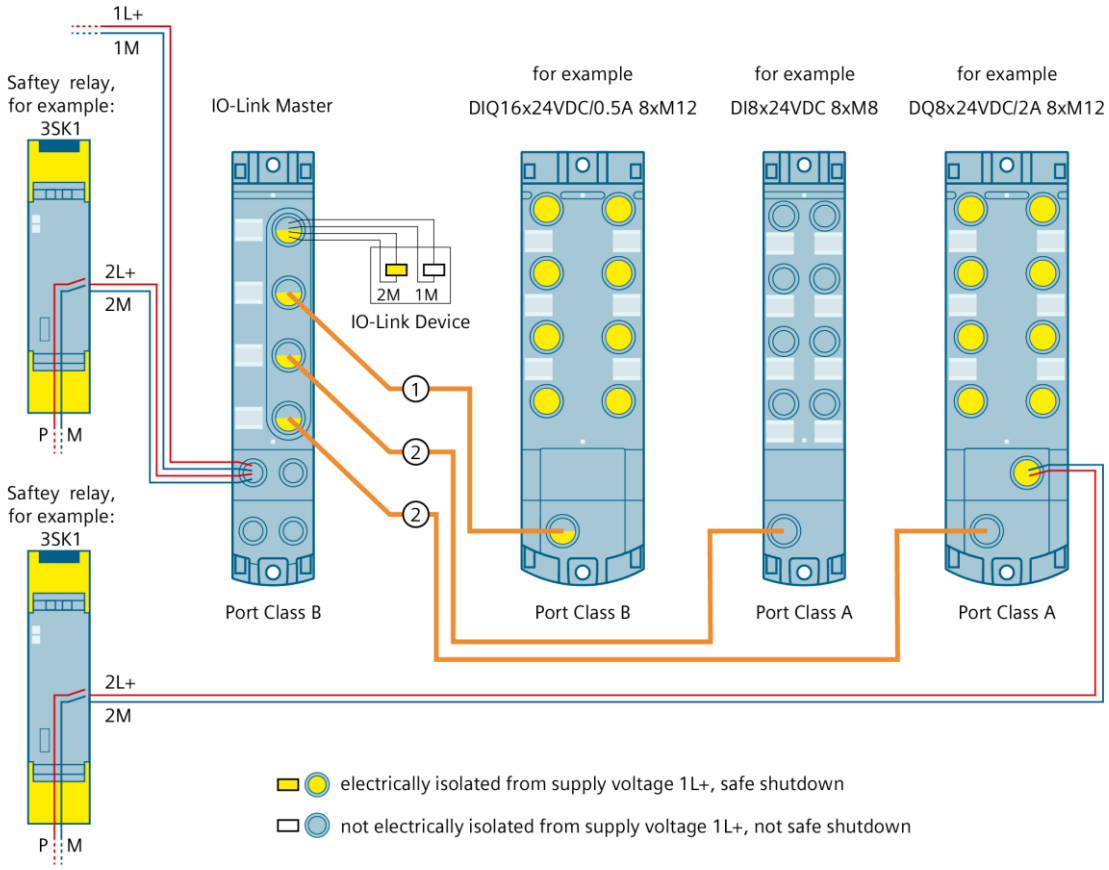

① 5-wire cable for a Port Class B connection

② 3-wire cable for a Port Class A connection

© Siemens AG 2023 All rights reserved

6 Examples with ET 200pro

Refer also to the wiring example in Appendix A.6 of the manual "SIMATIC Distributed IO System ET 200pro":

https://support.industry.siemens.com/cs/de/en/view/21210852

⚠ **WARNING**	**Note regarding the digital input-output module** On the mixed IO module 4DIO/4DO 24V DC/0.5A (6ES7 143-4BF00-0AA0) the higher-level safety circuit only switches off the supply voltage of the output ports DQ4-DQ7.

6.1 Via Safety Relay

Here, all outputs of the ET 200pro modules that are supplied by means of a safety relay with 2L+ and M are switched off simultaneously, depending on the safety relay, with up to SIL2/Cat.3/PL d. This is only valid for outputs which will be supplied with 2L+ over the safety relay.

Figure 6-1 Safety Related Shutdown application with safety relay (PM switching)

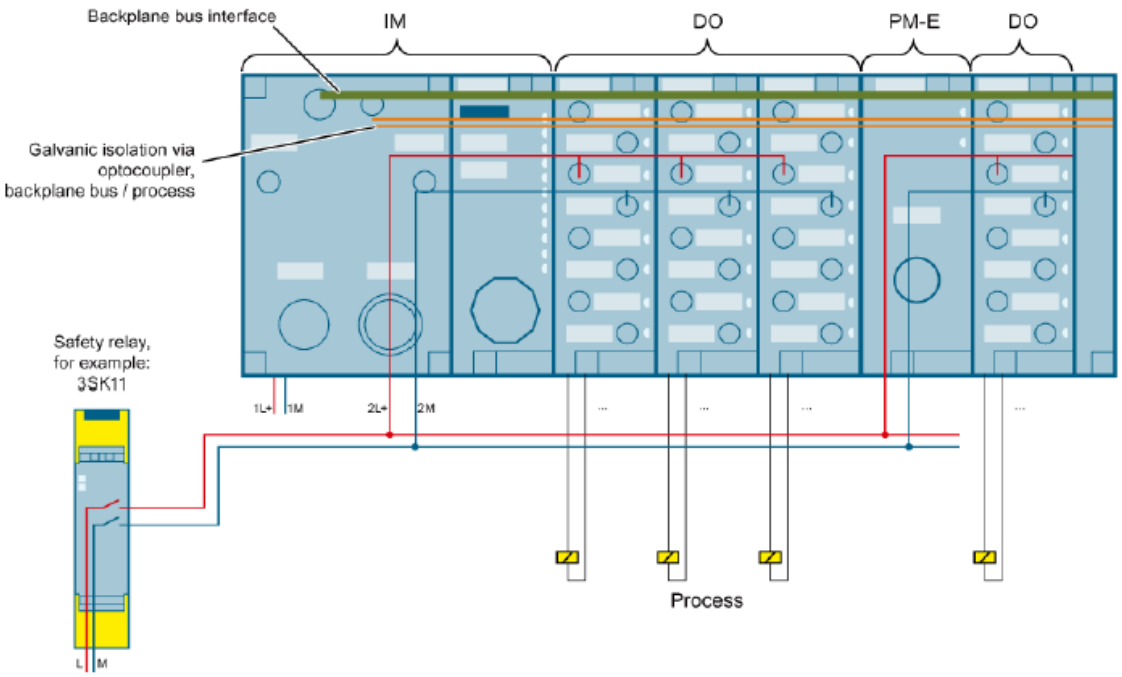

© Siemens AG 2023 All rights reserved

6.2 Via F-Switch PROFIsafe

The digital output of the standard ET 200pro module supplied by the internal F-Switch PROFIsafe is switched off, depending on the F-Switch, with up to SIL2/Cat.3/PL d. The M is common. This is only valid for outputs which will be supplied over the F switch (DO with yellow actuator).

Figure 6-2 Safety Related Shutdown application with F-Switch PROFIsafe (PP switching)

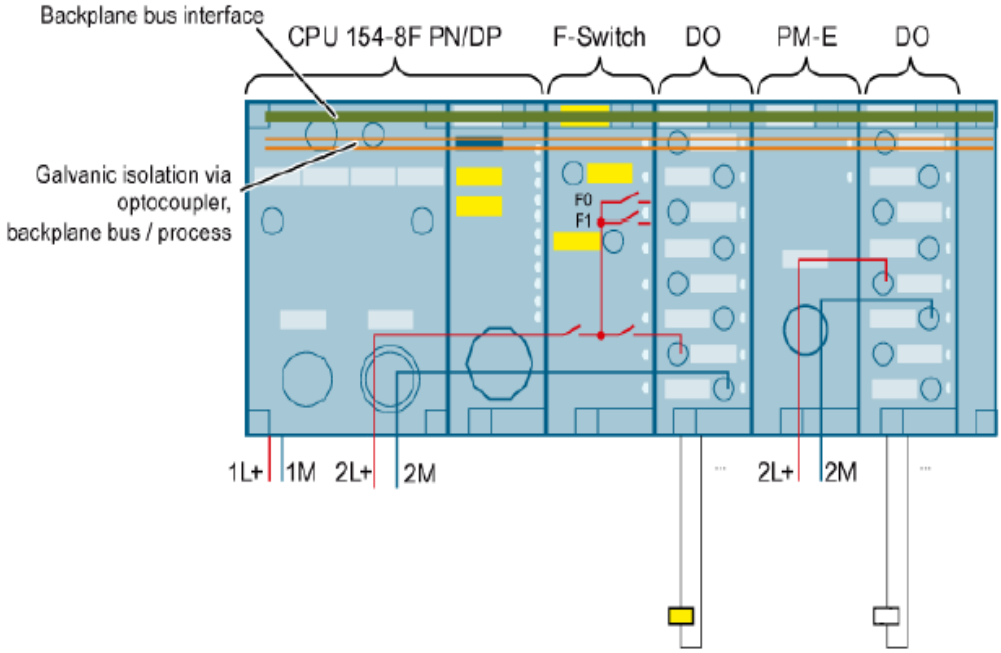

© Siemens AG 2023 All rights reserved

7 Examples with ET 200M / S7-300

As an example, the digital output module ET 200M DO32xDC24V, combined with Digital input/output module 16DO/16DIxDC24V and relay output module ET 200M RO16xDC24V were used.

WARNING	**Note regarding the Digital input-output module:** Safety related shutdown according to SIL2/Cat.3/PL d does not apply to Digital Inputs of IO module SM 323; DI 16/DO 16 x DC 24 V/0.5 A (6ES7323-1BL00-0AA0).

7.1 Via Safety Relay

In Figure 7-1 all digital outputs of the ET 200M modules that are supplied by a safety relay with the load voltage supply (1L+/2L+/3L+) and 1M/2M/3M are switched off simultaneously, depending on the safety relay, with up to SIL2/Cat.3/PL d. This refers only to the outputs marked with the color “yellow”.

Relay outputs of the ET 200M modules that are supplied by means of a safety relay with the load voltage supply (4L+) and 4M are switched off simultaneously, depending on the safety relay, with up to SIL1/Cat.2/PL c. This refers only to the outputs marked with the color “green”.

Figure 7-1 Safety Related Shutdown application with safety relay (PM switching)

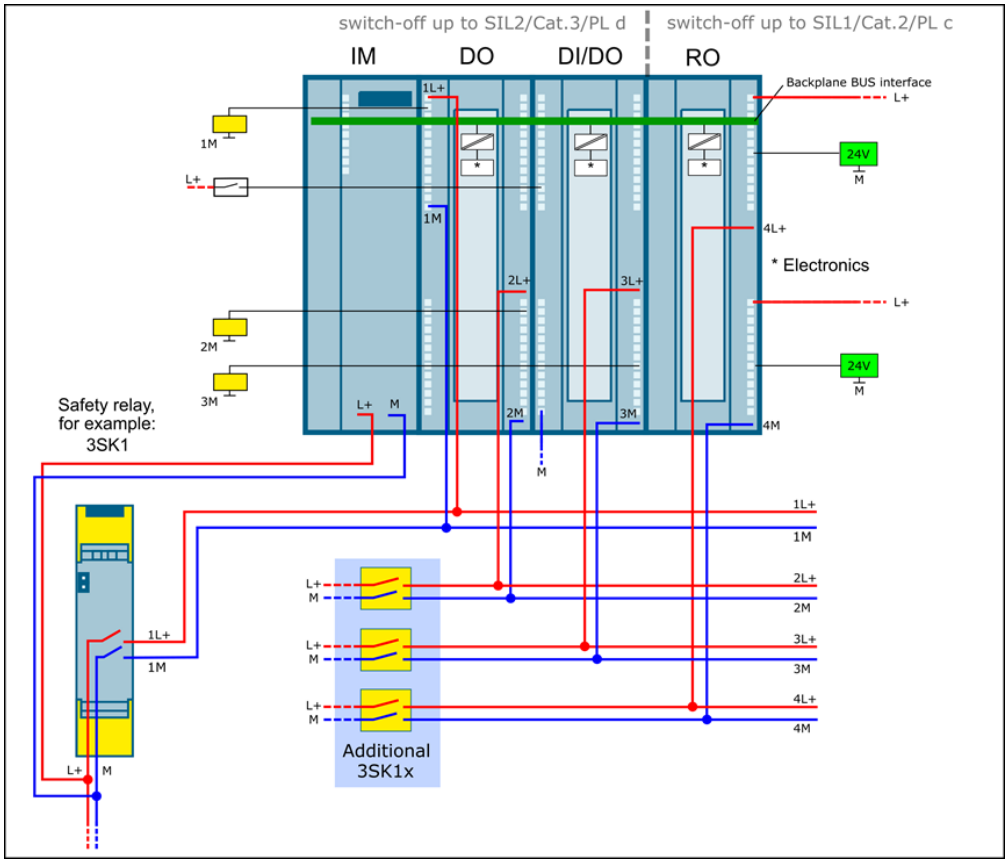

© Siemens AG 2023 All rights reserved

7.2 Via ET 200S F-DO and External Safety Relay PM switching

In Figure 7-2, all digital outputs of the ET 200M modules that are supplied by an external safety relay with the load voltage supply (1L+/2L+/3L+) and 1M/2M/3M are switched off simultaneously, depending on the safety relay, with up to SIL2/Cat.3/PL d. This refers only to the outputs marked with the color “yellow”.

Relay coils of the ET 200M modules that are supplied by means of a safety relay with the load voltage supply (4L+) and 4M are switched off simultaneously, depending on the safety relay, with up to SIL1/Cat.2/PL c. This refers only to the outputs marked with the color “green”.

The external safety relay is controlled by failsafe output module ET200S F-DO. Also, there is a feedback from the external failsafe relay to the standard digital input module of the ET200S system.

Figure 7-2 Safety Related Shutdown application with External Safety Relay (PM switching)

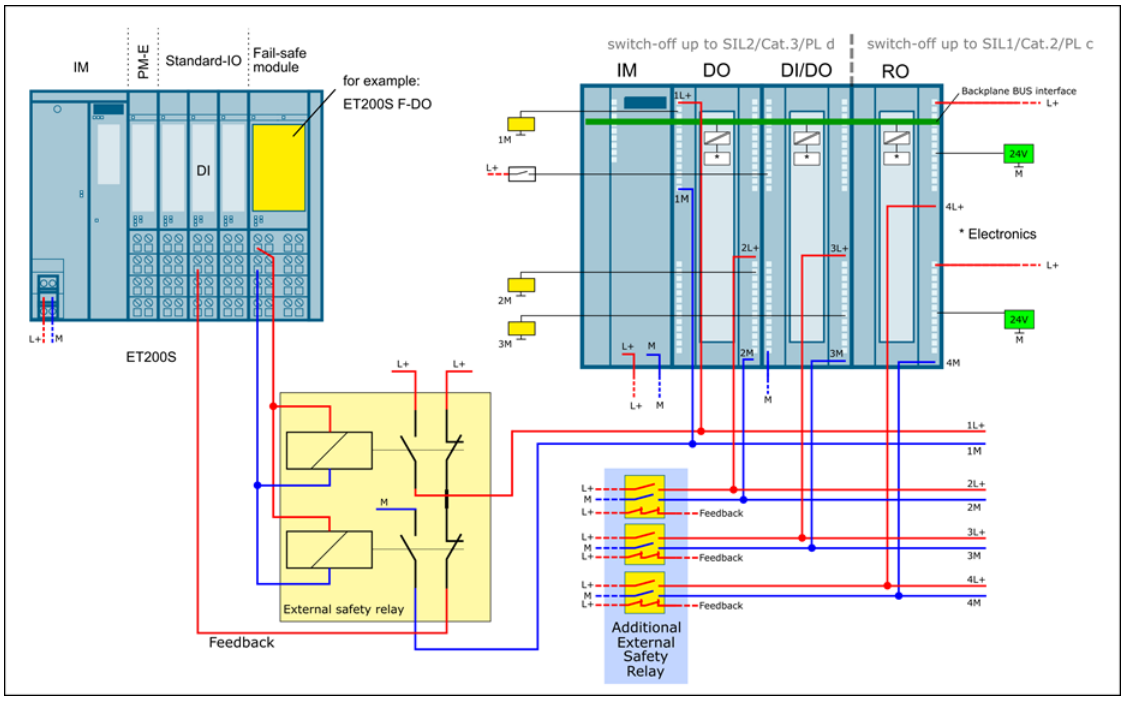

© Siemens AG 2023 All rights reserved

7.3 Via ET 200S F-DO and External Safety Relay PP switching

In Figure 7-3, all digital outputs of the ET 200M modules that are supplied by an external safety relay with the load voltage supply (1L+/2L+/3L+) are switched off simultaneously, depending on the safety relay, with up to SIL2/Cat.3/PL d. The M is common. This refers only to the outputs marked with the color “yellow”.

Relay coils of the ET 200M modules that are supplied by means of a safety relay with the load voltage supply (4L+) are switched off simultaneously, depending on the safety relay, with up to SIL1/Cat.2/PL c. This refers only to the outputs marked with the color “green”.

External safety relay is controlled by failsafe output module ET200S F-DO. Also, there is a feedback from the external failsafe relay to the standard digital input module of the ET200S system.

Figure 7-3 Safety Related Shutdown application with External Safety Relay (PP switching)

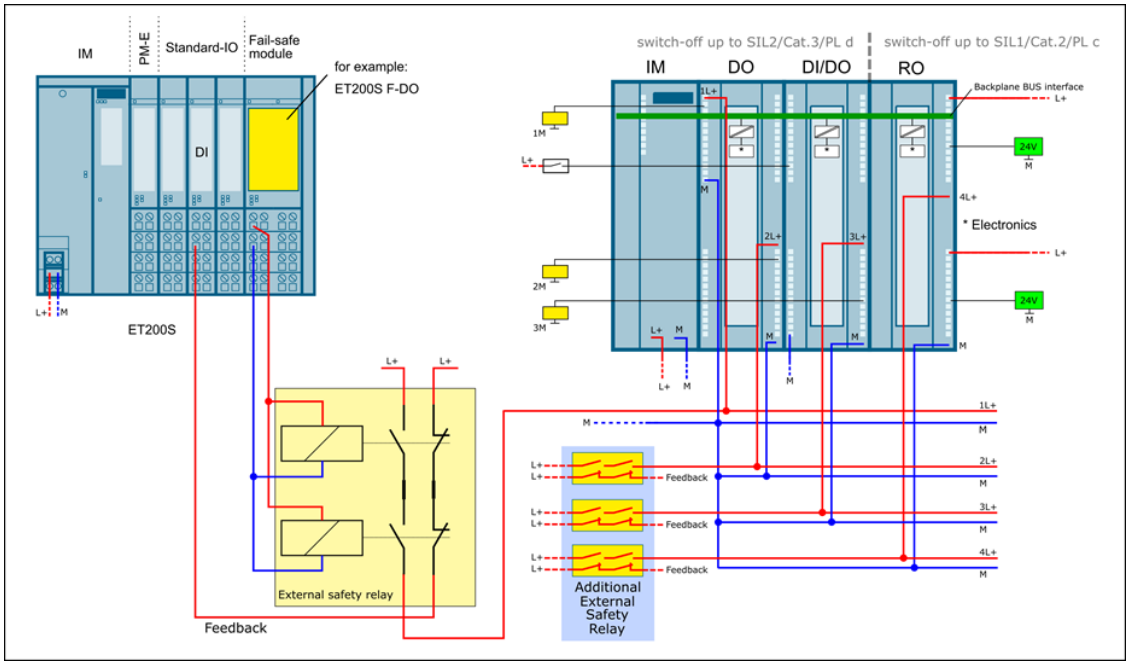

© Siemens AG 2023 All rights reserved

7.4 Via ET 200S F-DO and 1F-RO PM switching

In Figure 7-4, all digital outputs of the ET 200M modules that are supplied by an ET200S F-RO (Failsafe Relay output module) with the load voltage supply (1L+/2L+/3L+) and 1M/2M/3M are switched off simultaneously, depending on the safety relay, with up to SIL2/Cat.3/PL d. This refers only to the outputs marked with the color “yellow”.

Relay coils of the ET 200M modules that are supplied by means of a safety relay with the load voltage supply (4L+) and 4M are switched off simultaneously, depending on the safety relay, with up to SIL1/Cat.2/PL c. This refers only to the outputs marked with the color “green”. Safety relay is controlled by failsafe output module ET 200S F-DO.

Figure 7-4 Safety Related Shutdown application with ET200S 4F-DO and 1F-RO (PM switching)

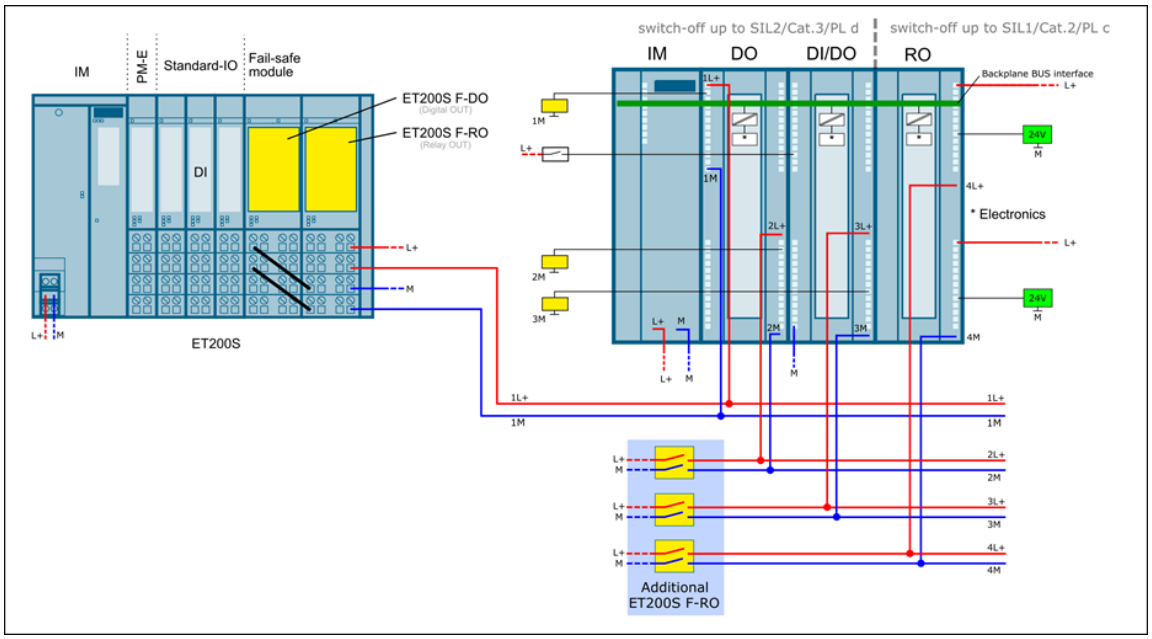

© Siemens AG 2023 All rights reserved

7.5 Via ET 200S PM-E F PM switching

In Figure 7-5, all digital outputs of the ET 200M modules that are supplied by an ET 200S PM-E F pm DC24V (Failsafe Power module) with the load voltage supply (1L+/2L+/3L+) and 1M/2M/3M are switched off simultaneously, depending on the safety power module, with up to SIL2/Cat.3/PL d. This refers only to the outputs marked with the color “yellow”.

Relay coils of the ET 200M modules that are supplied by means of a safety relay with the load voltage supply (4L+) and 4M are switched off simultaneously, depending on the safety relay, with up to SIL1/Cat.2/PL c. This refers only to the outputs marked with the color “green”.

Figure 7-5 Safety Related Shutdown application with ET200S PM-E F pm DC24V (PM switching)

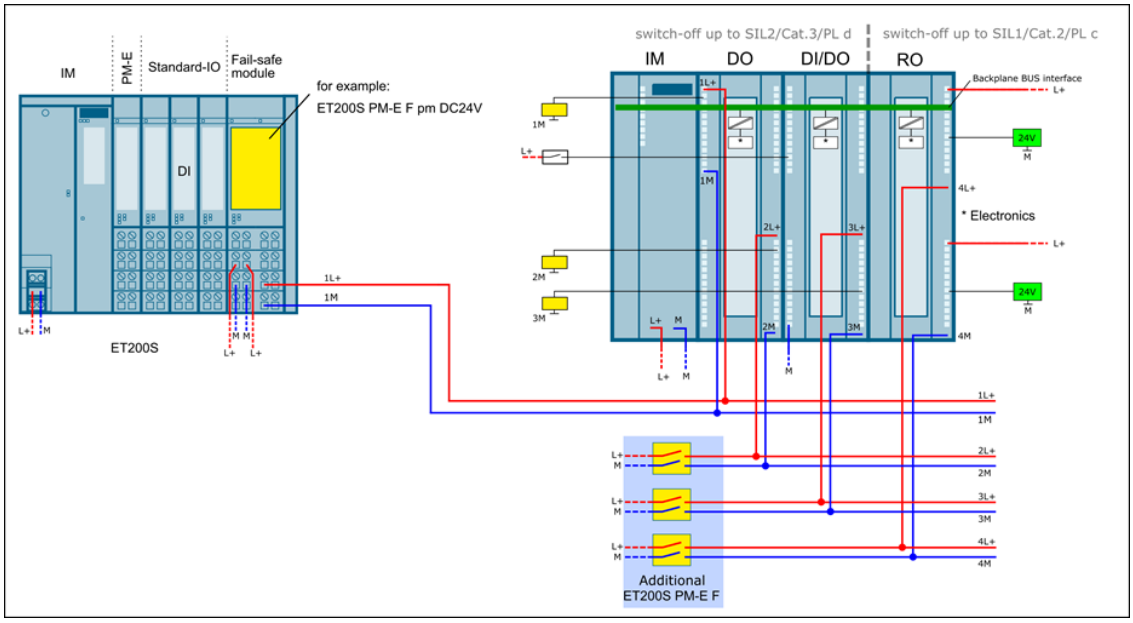

© Siemens AG 2023 All rights reserved

7.6 Via ET 200S PM-E F PP Switching

In Figure 7-6, all digital outputs of the ET 200M modules that are supplied by an ET200SP PM-E F pp (Failsafe Power module) with the load voltage supply (1L+/2L+/3L+) are switched off simultaneously, depending on the safety power module, with up to SIL2/Cat.3/PL d. The M is common. This refers only to the outputs marked with the color “yellow”.

Relay coils of the ET 200M modules that are supplied by means of a safety relay with the load voltage supply (4L+) are switched off simultaneously, depending on the safety relay,with up to SIL1 /Cat.2/PLc. This refers only to the outputs marked with the color “green”.

Figure 7-6 Safety Related Shutdown application with ET200S PM-E F pp DC24V (PP switching)

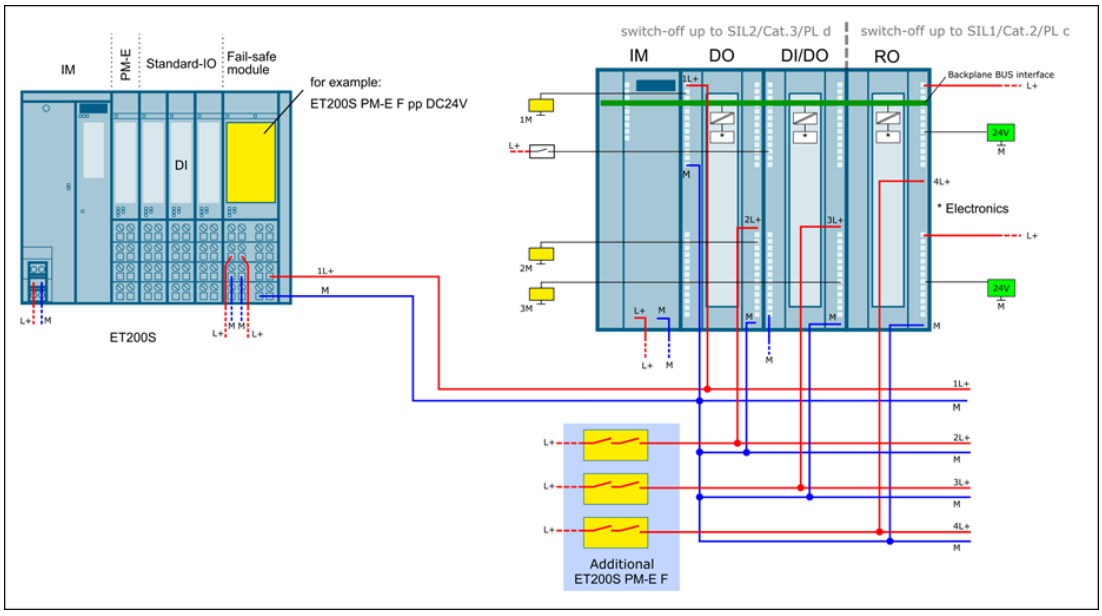

© Siemens AG 2023 All rights reserved

8 Examples with ET 200S

The examples shown below meet the requirements for safety related shutdown up to SIL2/Cat.3/PL d for digital output modules and SIL1/Cat.2/PL c for analog output modules and relay modules, depending on the safety switch-off device.

8.1 Via Safety Relay

Figure 8-1 Safety related shutdown using Safety Relay (pm switching)

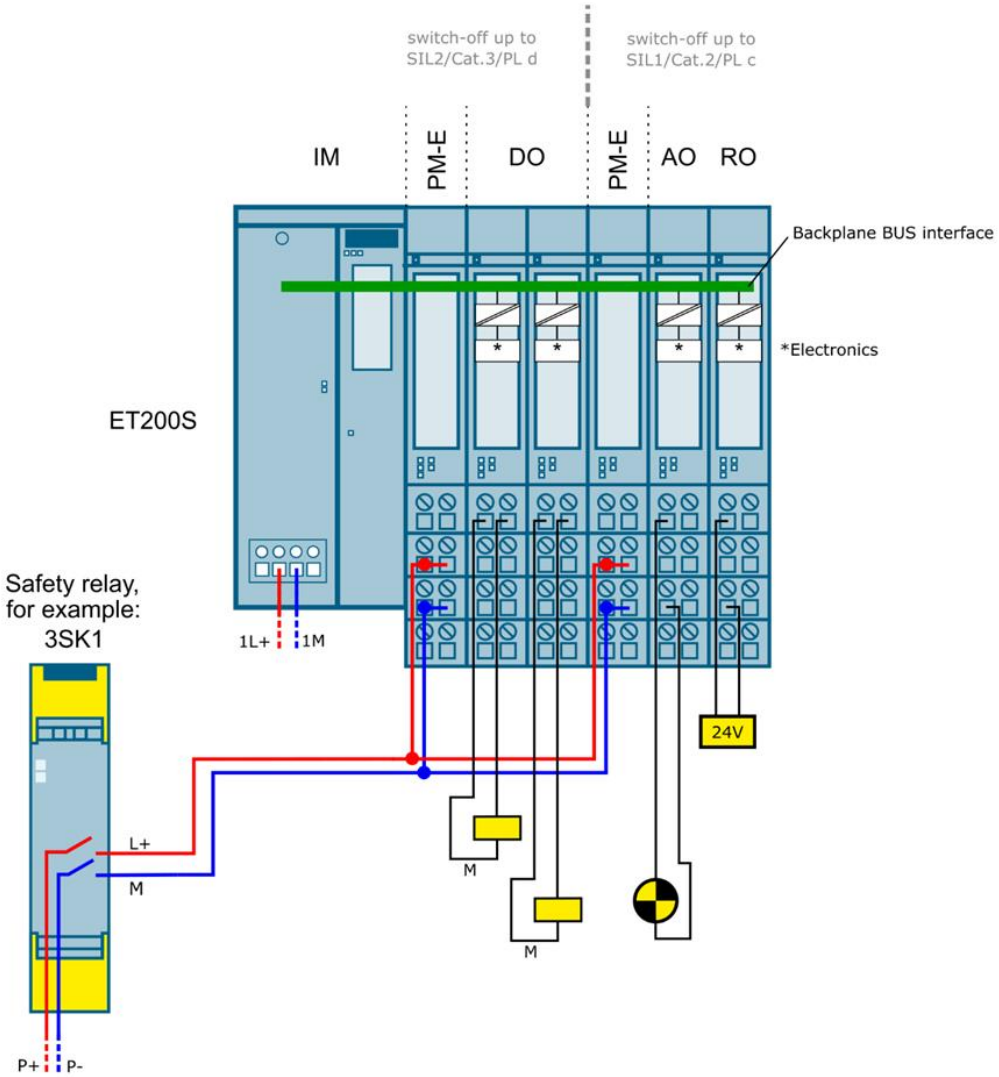

© Siemens AG 2023 All rights reserved

8.2 Via ET 200S F-DO DC24V and ET 200S F-RO

Figure 8-2 Safety related shutdown using ET 200S F-DO DC24V and ET 200S F-RO

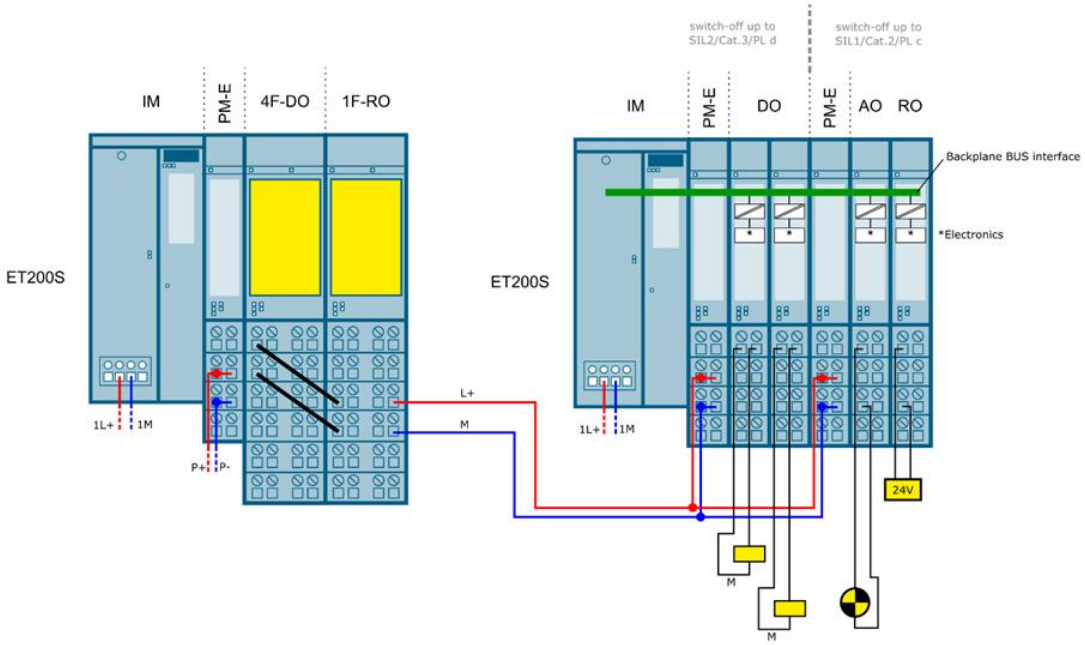

NOTE If the required load current does not exceed 2A, the 4F-DO alone can be used as safe switch-off device.

© Siemens AG 2023 All rights reserved

8.3 Via ET 200S PM-E F pm DC24V

Figure 8-3 Safety related shutdown using ET 200S PM-E F pm DC24V

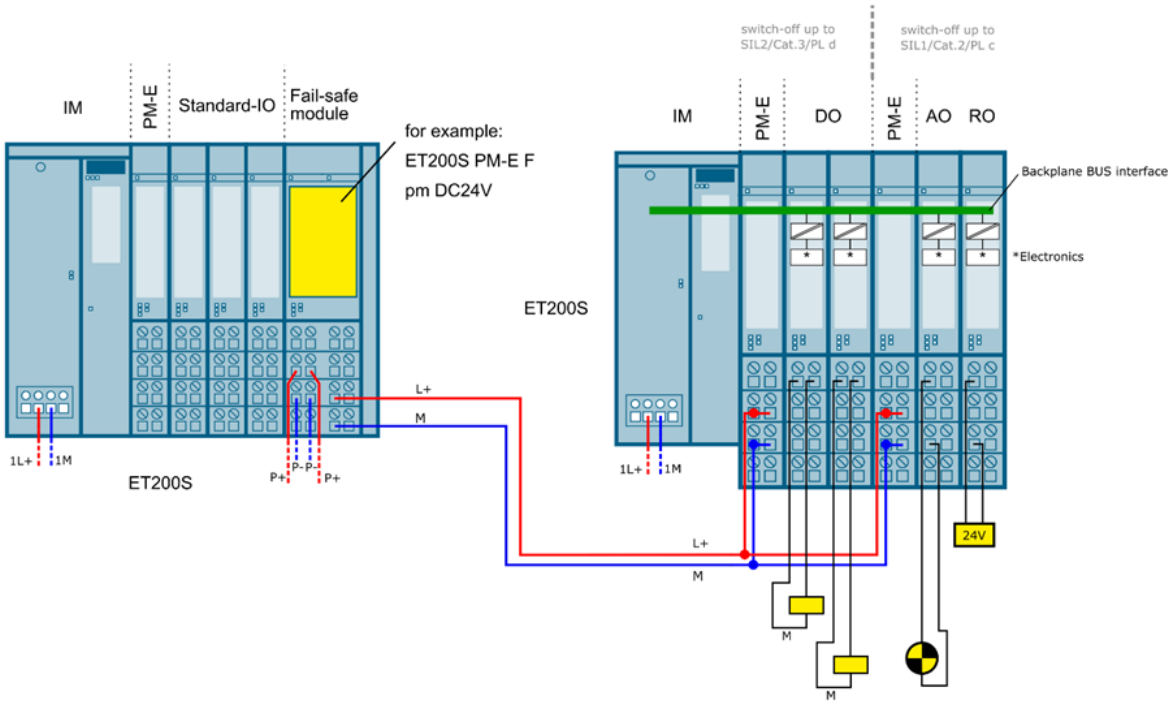

© Siemens AG 2023 All rights reserved

8.4 ET 200S PM-E F pp switching off standard modules

Figure 8-4 ET 200S PM-E F pp switching off standard modules

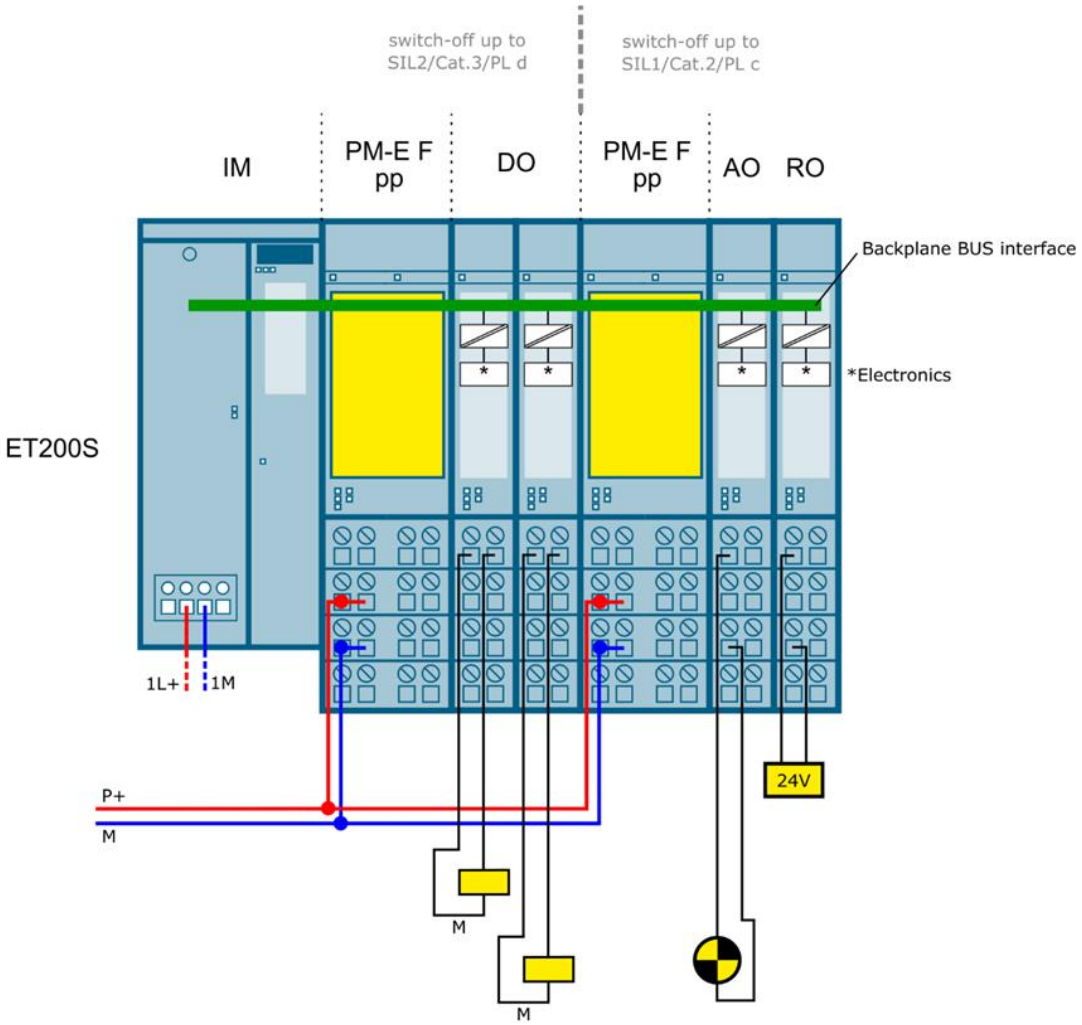

© Siemens AG 2023 All rights reserved

8.5 ET 200S PM-E F pm switching off standard modules

Figure 8-5 ET 200S PM-E F pm switching off standard modules

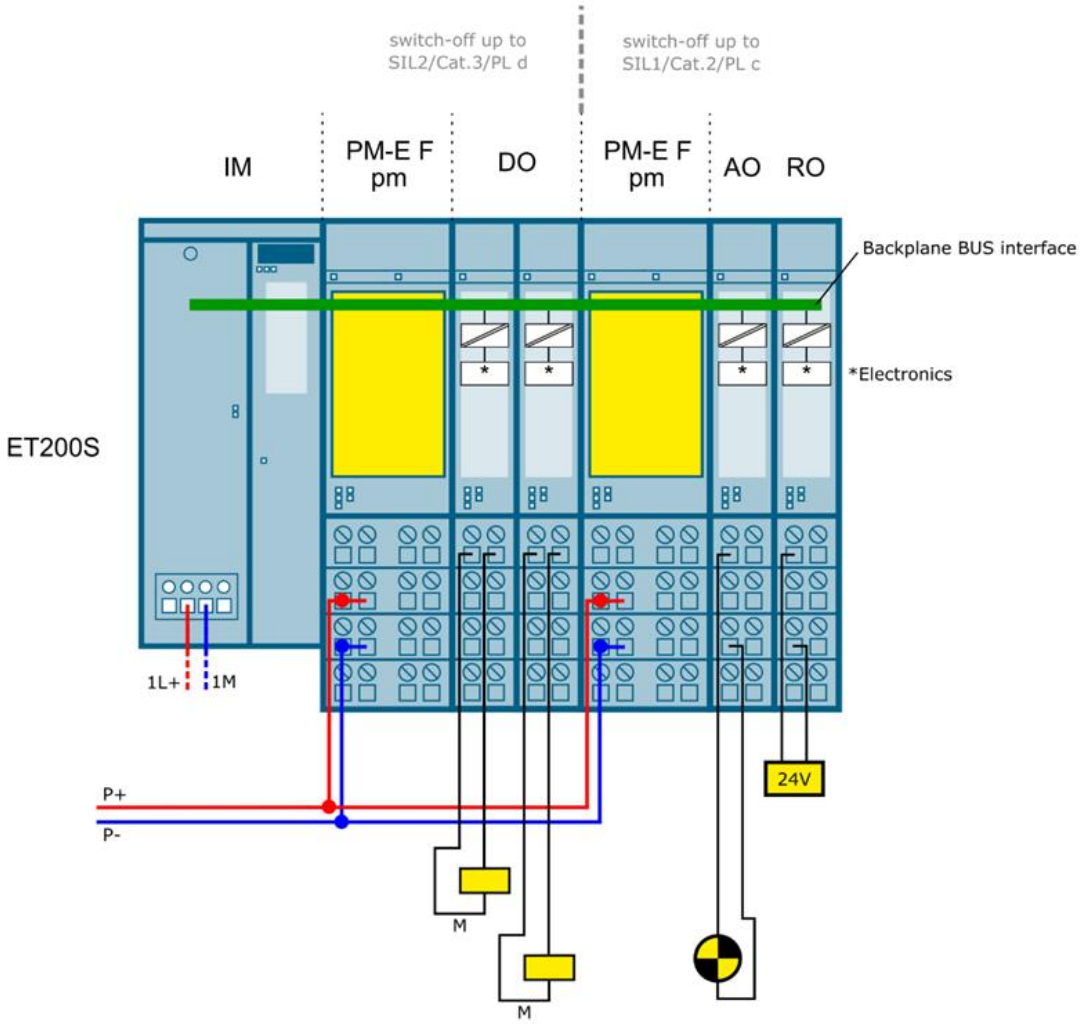

© Siemens AG 2023 All rights reserved