Industrial controls

SIRIUS Innovations
Load Feeder as Reversing Starter
Assembly and Wiring

Application description • June 2010

Applications & Tools

Answers for industry.

SIEMENS

Industry Automation and Drives Technologies Service & Support Portal

This document is available via the Siemens AG Industry Automation and Drives Technologies Internet service portal. The document can be downloaded directly via the following link:

http://support.automation.siemens.com/WW/view/en/41737666

If you have any questions on this article, please contact us at the following e-mail address:

online-support.automation@siemens.com

Copyright Siemens AG 2010 All rights reserved

SIEMENS

SIRIUS Innovations
Load Feeder as Reversing Starter

Assembly and Wiring

Preface 1

Application description 2

Wiring of the application 3

Further reading 4

History 5

Copyright Siemens AG 2010 All rights reserved

Guarantee and liability

Note

Application examples are non-binding and do not claim to be complete with regard to configuration, equipment or to any contingency. The application examples are not customer-specific solutions. They are merely intended to assist in dealing with typical problems. You are solely responsible for the correct operation of the described products. These application examples do not relieve you of your responsibility for safe usage, installation, operation and maintenance. By using these application examples, you accept that we are not liable for any damage beyond the liability described. We reserve the right to make changes to these application examples at any time, without prior notice. If the suggestions in this application example deviate from other Siemens publications (e.g. catalogs), the contents of the other document have priority.

We assume no liability for any of the information contained in this document.

We are not liable for any damage caused by the use of the examples, information, programs, configuration and performance data, etc. described in this application example, independent of the legal ground upon which this is based, unless we are imperatively liable according to the product liability law, e.g. due to cases of premeditation, an act of gross negligence, injury to life, body or health, or unless the quality of a product has been guaranteed, or due to fraudulent concealment of a defect or serious breach of contract. Damages due to serious breach of contract are, however, restricted to prevalent and foreseeable contractual damages, inasmuch as there is no premeditation or gross negligence nor imperative liability due to injury to life, body or health. This does not constitute a change in the burden of proof to your disadvantage.

Copyright Siemens AG 2010 All rights reserved

Propagation or reproduction of these application examples or parts thereof is not permitted unless expressly allowed by Siemens Industry Sector.

Table of contents

Guarantee and liability **4**

1 Preface **6**

1.1 Objective of the application 6

2 Application description **7**

2.1 Content 7
2.2 Assembly 8
2.2.1 Overview 8
2.2.2 Requirements 8
2.2.3 Advantages of this solution 8
2.2.4 Required hardware components 9
2.2.5 Alternative solutions (optional) 9

3 Wiring of the application **10**

3.1 Content 10
3.2 Connecting 10
3.2.1 Wiring of the main current circuit 10
3.2.2 Wiring of the control current circuit 11

4 Further reading **12**

4.1 Internet link information 12

5 History **13**

Copyright Siemens AG 2010 All rights reserved

1 Preface

1.1 Objective of the application

This application description describes the connection of the improved SIRIUS switching devices.

This application shows the assembly of a load feeder as a reversing starter for a lift table.

Core content of this application

The following core issues are discussed:

- Assembly and wiring of a reversing starter

Basic knowledge of this topic is required.

Structure of the document

The documentation of this application is divided into the following main parts.

Table 1-1

Part	Description
Application description	This chapter gives you an overview. The required standard hardware components are introduced.
Wiring of the application	This section shows the electrical wiring of the application.
Further reading	This chapter provides further information, e.g. literature references.

Copyright Siemens AG 2010 All rights reserved

2 Application description

2.1 Content

This application example describes the assembly and connection of a reversing starter to a lift table. The conveyor integrated within the lift table is not described in this example.

Control of the contactors can be carried out by a PLC or another contact block (e.g. switch or contactor).

Copyright Siemens AG 2010 All rights reserved

2.2 Assembly

2.2.1 Overview

A load feeder reversing starter is required for the lift table. The reversing starter is fully wired and mechanically connected.

The diagram below shows an example of a lift table with an integrated conveyor. The control current circuit (control of the contactors), the feedback from the positions and the main current circuit are displayed for commissioning.

Figure 2-1 Connection of the load feeder reversing starter

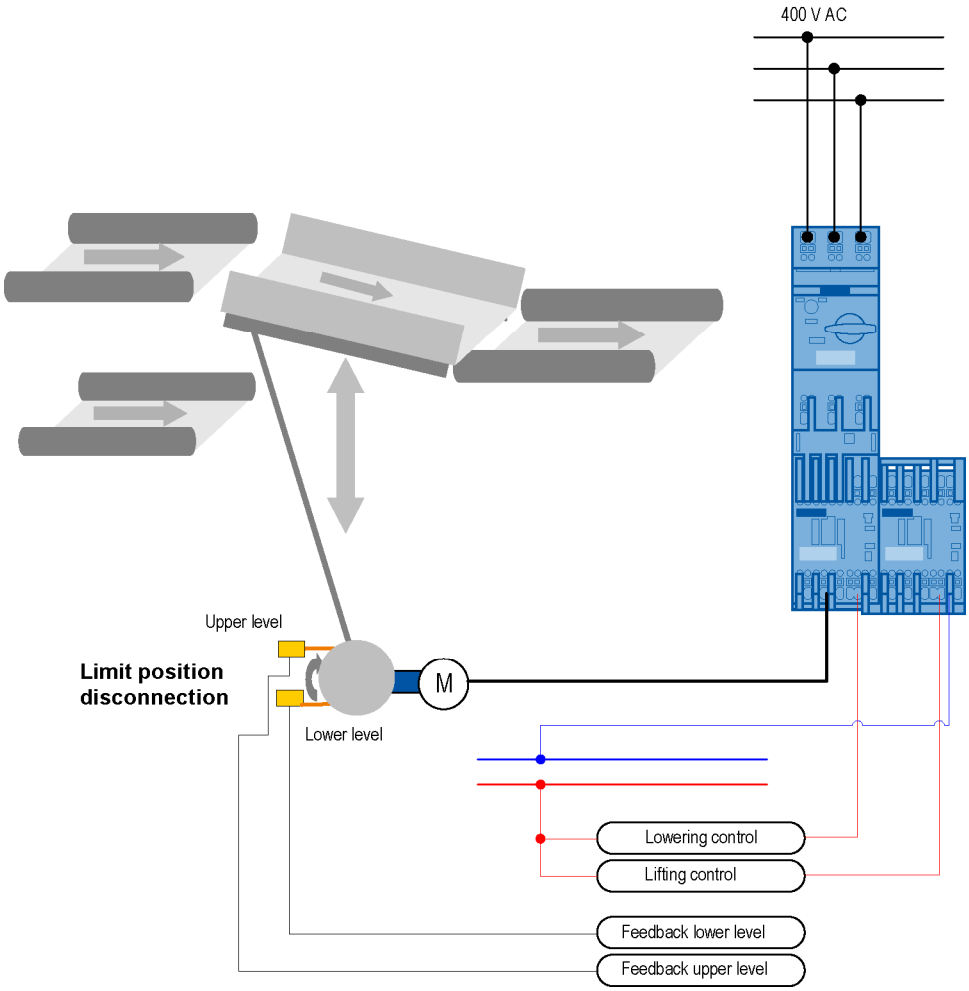

2.2.2 Requirements

The three-phase motor's maximum output is 1.5 kW.
The control for the reversing combination is via a 24 V DC supply.

2.2.3 Advantages of this solution

The reversing combination's contactors are mechanically and electrically interlocked. The type of assignment 2 applies for this application example. Spring-loaded connection technology enables quick assembly requiring no tools.

Copyright Siemens AG 2010 All rights reserved

2.2.4 Required hardware components

The following table shows the minimum configuration of the hardware components.

Table 2-2 Hardware components

Component	Quantity	MLFB / order number	Note
Load feeder reversing starter	1	3RA2210-1EE15-2BB4	Electrically and mechanically interlocked

2.2.5 Alternative solutions (optional)

The following table shows the hardware components required for reversing combination self-assembly.

Table 2-3 Hardware components (self-assembly)

Component	Quantity	MLFB / order number	Note
Motor starter protector	1	3RV2011-1EA20	Size S00
Contactor	2	3RT2015-2BB42	Size S00
Installation kit for reversing combination	1	3RA2913-2AA2	• Wiring modules top and bottom • Mechanical interlocking • Two connection clips
Link module	1	3RA2911-2AA00	—

Copyright Siemens AG 2010 All rights reserved

3 Wiring of the application

3.1 Content

This section shows the electrical wiring of the application.

3.2 Connecting

This chapter describes how the main current circuit and the control current circuit are connected.

3.2.1 Wiring of the main current circuit

Figure 3-2 Wiring of the main current circuit

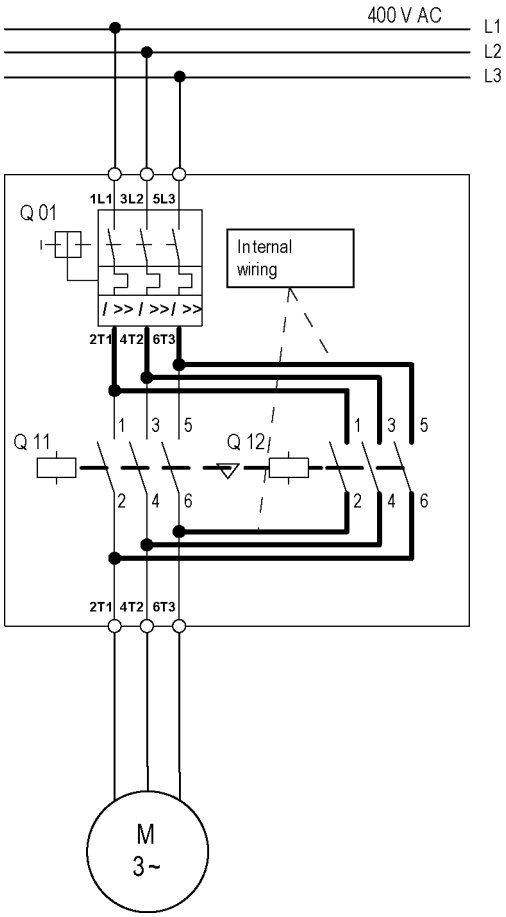

Copyright Siemens AG 2010 All rights reserved

3.2.2 Wiring of the control current circuit

Figure 3-3 Wiring of the control current circuit

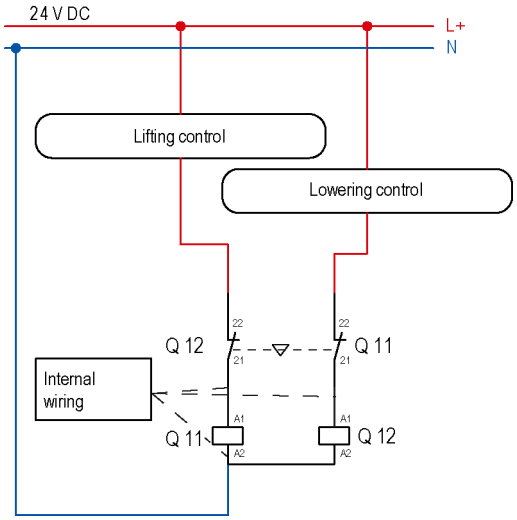

Installation of the hardware

The hardware components can be found in chapter 2.2.4.

The structure of the hardware components is shown in chapter 2.2.1.

Note The installation guidelines must always be observed.

Copyright Siemens AG 2010 All rights reserved

4 Further reading

4.1 Internet link information

This list is not complete. It only provides a selection of possible further reading.

Table 4-4

	Topic	Title
\1\	Link to the document	http://support.automation.siemens.com/WW/view/en/41737666
\2\	System manual Industrial controls – SIRIUS innovations	http://support.automation.siemens.com/WW/view/en/39740306
\3\	Siemens A&D Customer Support	http://support.automation.siemens.com

Copyright Siemens AG 2010 All rights reserved

5 History

Table 5-5 History

Version	Date	Change
V1.0	25.02.2010	First issue
V2.0	28.06.2010	Update of the motor starter protector and contactor order numbers

Copyright Siemens AG 2010 All rights reserved