SIEMENS

SIMATIC Ident
RFID systems
SIMATIC RF260X antenna multiplexer

Compact Operating Instructions

Characteristics

The SIMATIC RF260X antenna multiplexer can be used to operate up to six antennas on one reader.

SIMATIC RF260X antenna multiplexer	Characteristics	
	Scope of application	• Designed for distributed mounting of antennas in warehouses, logistics and distribution • Rugged housing and high degree of protection guarantee problem-free use under the most difficult industrial conditions.
	Read/write devices that can be connected	SLG D10 [1]
	Number of antennas that can be connected	Maximum 6
	Connectable antennas	• ANT D5 • ANT D6 • ANT D8 • ANT D10
	Degree of protection	IP65

[1] The RF260X antenna multiplexer is only parameterizable and operable with SLG D10 of AS: G (FW V5.04) and higher.

Safety instructions for the device/system

NOTICE
This device/system may only be used for the application instances that have been described in the catalog and the technical documentation "MOBY D System Manual (http://support.automation.siemens.com/WW/view/en/13628689/0/en)" and only in combination with third-party devices and components recommended and/or approved by Siemens.

Ordering data

Table 1 SIMATIC RF260X ordering data

	Order Number
SIMATIC RF260X Antenna multiplexer incl. connecting cable 0.4 m	6GT2894-0EA00

Table 2 SIMATIC RF260X accessories ordering data

Accessories	Order Number
SLG D10	6GT2698-1AA00
ANT D5 incl. antenna cable (3.3 m)	6GT2698-5AA00
ANT D6 incl. antenna cable (3.3 m)	6GT2698-5AB00
ANT D8 incl. antenna cable (3.3 m)	6GT2604-0AC00-0AX0
ANT D10 incl. antenna cable (3.3 m)	6GT2698-5AF00
Wide range power supply - EU version	6GT2898-0AA00
Wide range power supply - UK version	6GT2898-0AA10
Wide range power supply - US version	6GT2898-0AA20
Power supply cable, 5 m	6GT2491-1HH50
RS 232 connecting cable, 5 m	6GT2691-0BH50
RS 232 connecting cable, 20 m	6GT2691-0BN20
Antenna cable, length 10.5 m	6GT2691-0CN10
Antenna extension, length 7.2 m	6GT2691-0DH72

Description

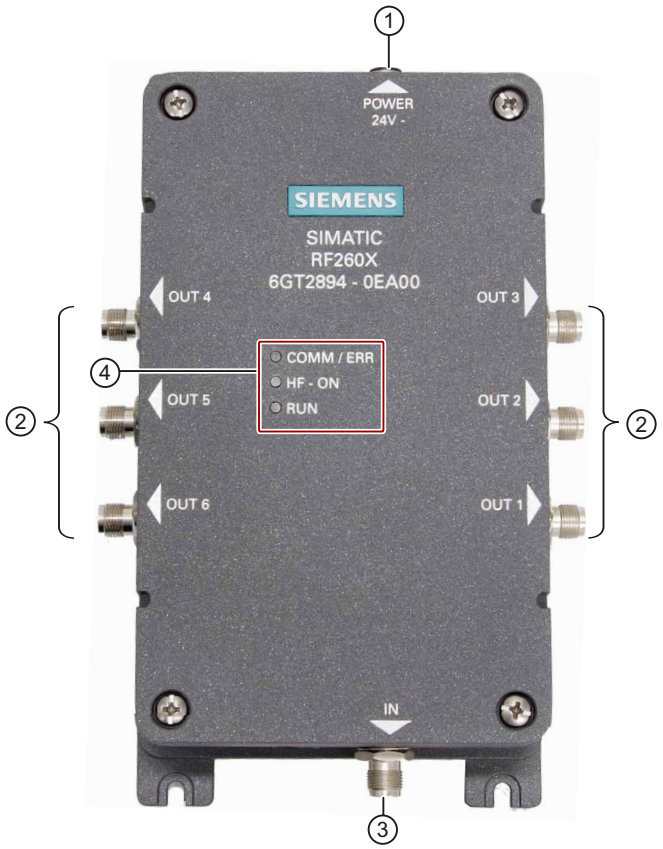

①	24 V DC power supply		
②	Antenna connections OUT 1 to OUT 6 with LEDs		
	Color	Status LED	
	Yellow	Lit when the corresponding antenna output is active.	
③	SLG antenna connection "IN"		
④	LEDs		
	LED	Color	Status LED
	COMM / ERR	Red	• Flashes when the RF260X receives a signal from the SLG. (Only with commands, directly on the RF260X) • Lit when the multiplexer has detected an error on the output (e.g. non-terminated antenna cable, defective antenna cable)
	HF - ON	Green	Lit when an HF signal is applied to the "IN" socket ③
	RUN	Green	Flashes when the RF260X is in the normal operating state.

Principle of operation

You can operate up to six antennas on one reader via the multiplexer.

The data is processed sequentially.

Antenna switchover is performed in time-multiplex mode, so by connecting several antennas together, the processing time / activation time per antenna is lengthened accordingly.

Connectors

- **Power supply ①**

Pin	Pin, casing side 4-pin M12	Assignment RF260X
 Plan view	1	Ground (0 V)
	2	+ 24 V
	3	+ 24 V
	4	Ground (0 V)

- **SLG connection ③**

Figure 1 SLG connection

If a longer antenna cable is required between the SLG D10 and SIMATIC RF260X multiplexer, a 7.2 m long cable (e.g. 6GT2691-0DH72) must be used to extend it, see Ordering data (Page 1).

The excess length must then be rolled up bifilar and fastened to minimize interference from external sources.

- **Antenna outputs ② (OUT 1 to OUT 3 / OUT 4 to OUT 6)**

Configuration of SIMATIC RF260X

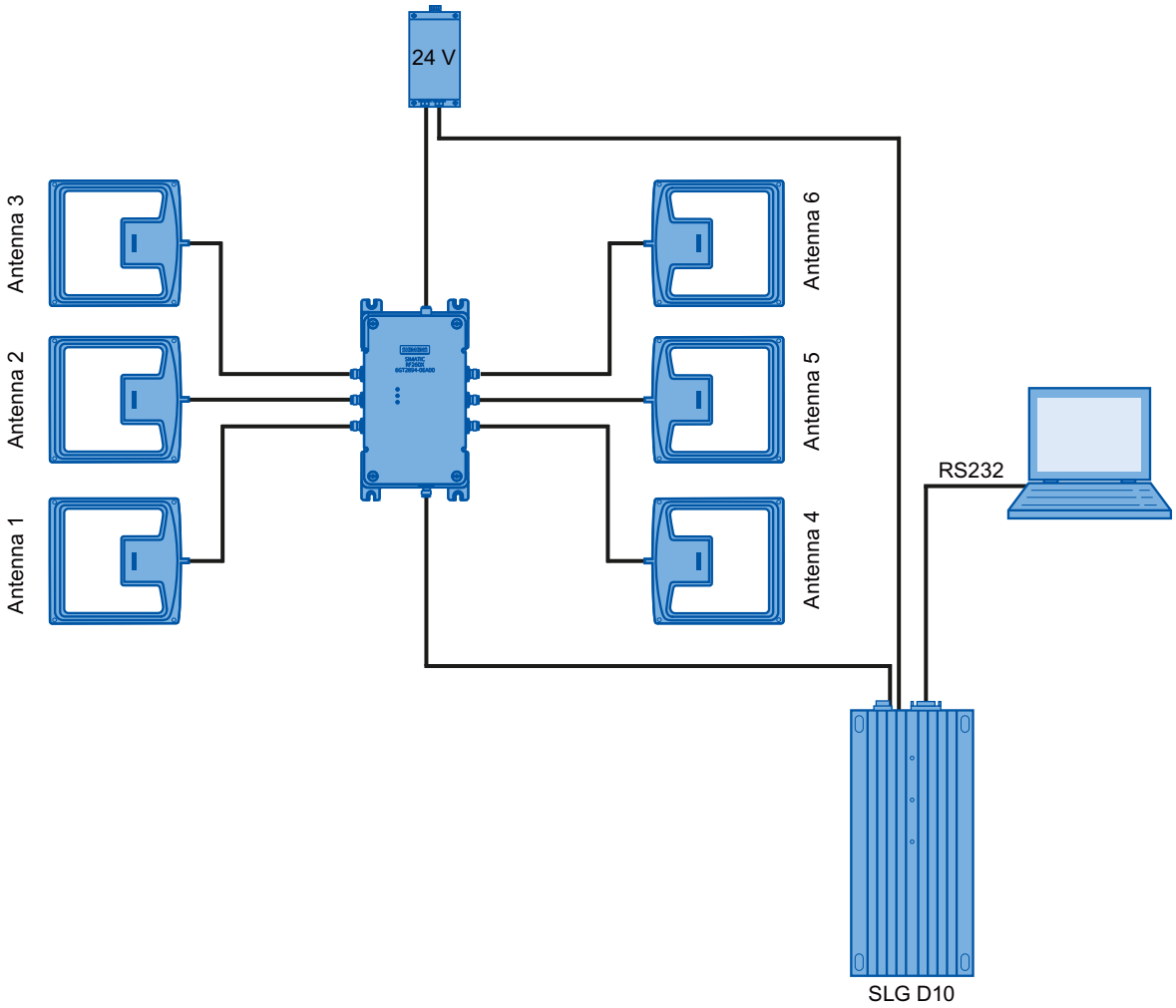

Figure 2 Configuration example with ANT D5

Parameterization

Parameterization can be performed using the tool "MOBYDSet" (V7.5.5).

This tool is primarily used for parameterization and commissioning, and is not designed for productive operation.

The relevant parameters of the RF260X can be set in the "Configuration" menu under "SystemParameters > CFG15: Antenna Multiplexing" ①.

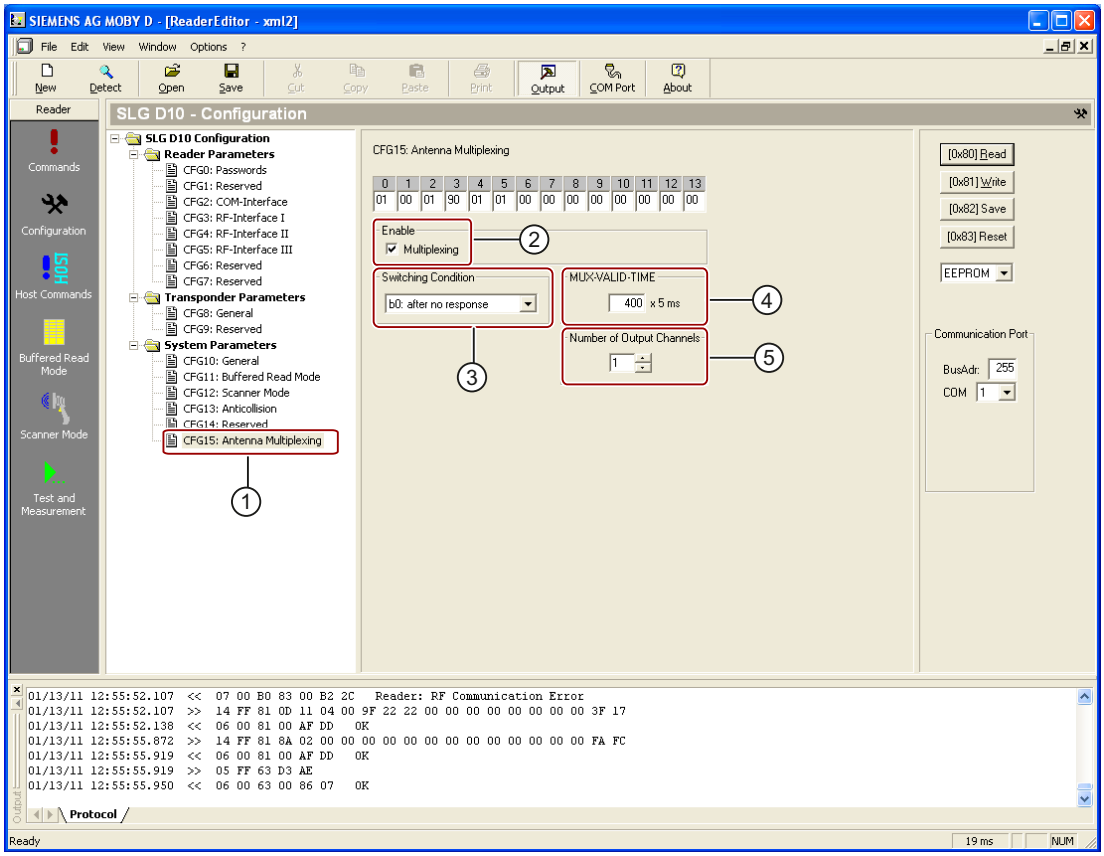

Figure 3 Menu "Configuration" MOBYDSet"

- For operation with RF260X, the "Multiplexing" function ② must be activated."
- The two antenna switchover options listed below are available under "Switching Condition" ③:
  - Setting "b1, after Mux Valid Time": A fixed read time is specified in the field "MUX-VALID-TIME" ④.
  - Setting "b0, after no response": In this case, when an MDS is detected the read is executed within the specified "MUX-VALID-TIME". If an MDS is not detected, switchover to the next channel is performed immediately.
- The number of reserved channels must be specified under "Number of Output Channels" ⑤.

Note

- When the parameterization of the SLG or RF260X is changed in scanner mode, it is important to note that message frame collisions can occur if the message frame is transmitted when an MDS is present.
- The transponder response time (setting: CFG2: COM interface) during operation of the RF260X must be larger than the total switchover time for all the connected antennas (CFG15: MUX-VALD-TIME x Number of Output Channels ≤ Transponder Response Time)

RF260X commands

The tools "MOBYDSet" (V7.5.5) can also be used to send specific commands to the RF260X. In the menu "RF260X Commands" under "Commands", the following commands can be sent:

- Detect (detection of the RF260X by the SLG)
- Channel Select (set to a static channel)
- CPU-Reset (restart the RF260X software)
- Software Version (read out software and hardware versions)

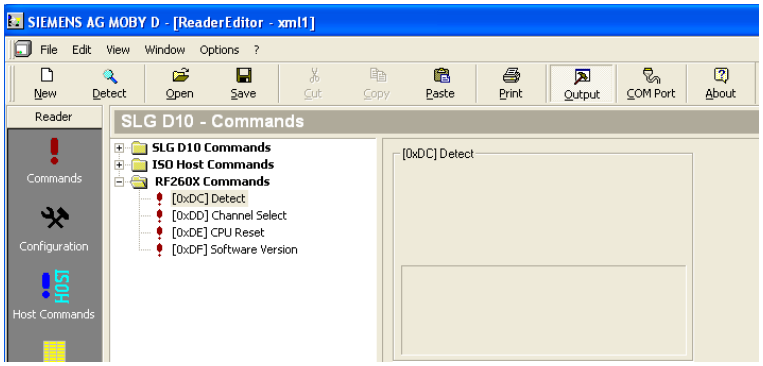

Figure 4 Sending commands from the tool "MOBYDSet"

Technical specifications

Table 3 Technical specifications of SIMATIC RF260X

Max. write/read distance ANT to MDS (S_g)	See manual for the relevant antenna
Number of input channels	1
Number of output channels	6
Impedance	50 ohm
Power supply in V:	24 (± 10 %)
Load current in mA:	max. 200
Dimensions in mm (L x W x H)	240 x 150 x 70
Length of the SLG connection cable (included in scope of delivery)	0.4 m
Color	Anthracite
Material	Aluminum die-casting
Plug-in connections	• Power supply: Four-pole M12 / 4 pole round connector • SLG antenna connection: Single-pole TNC socket • Antenna connections: 6 x TNC socket
Max. performance (SLG input, or per antenna)	8 W
Shock resistant according to EN 60721-3-7 Class 7M2 Total shock response spectrum Type II	1 g
Vibration compliant with EN 60721-3-7 Class 7M2	1.5 g (5 to 500 Hz)
Fixing	4 x M5 screws
Tightening torque (at room temperature)	≤ 5 Nm
Ambient temperature • During operation • During transportation and storage	 • -20 °C to +55 °C • -25 °C to +70 °C
MTBF	2.5 x 10^6 hours
Degree of protection to EN 60529	IP65
Weight, approx.	1.8 kg
Approvals	• CE • FCC • IC

Dimensional drawing

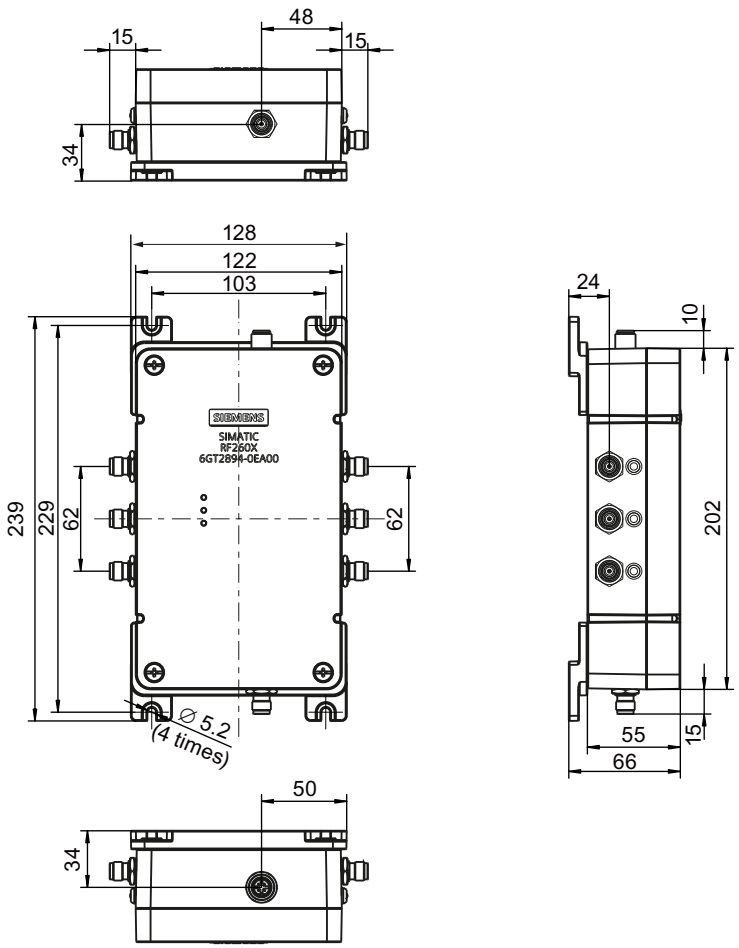

Dimensions in mm

Figure 5 RF260X dimension drawing

Service & Support

Technical support

- Phone: + 49 (0) 911 895 7222
- Fax: + 49 (0) 911 895 7223
- E-mail (mailto:support.automation@siemens.com)
- Internet: Online support request form: (www.siemens.com/automation/support-request)

Service & support at IA/DT

Support homepage (www.siemens.com/automation/service&support)

RFID homepage

For general information about our identification systems, visit RFID homepage (http://www.siemens.com/ident).

Siemens AG
Industry Sector
Postfach 48 48
90026 NÜRNBERG

SIMATIC RF260X antenna multiplexer
D0243-U001-A1-7618, 02/2011