Burner Technology for Distributed Safety

Distributed Safety

Application Example • August 2015

Applications & Tools

Answers for industry.

SIEMENS

Siemens Industry Online Support

This entry is taken from Siemens Industry Online Support. The following link takes you directly to the download page of this document:

https://support.industry.siemens.com/cs/ww/en/view/73608380

Copyright © Siemens AG 2015 All rights reserved

SIEMENS

SIMATIC
Burner technology for Distributed Safety

Burner Technology and Burner Library 1

System and Software Requirements 2

Functions for Burner Technology 3

Interaction of the Blocks 4

Migration 5

Appendix 6

Copyright © Siemens AG 2015 All rights reserved

Warranty and Liability

Note

The Application Examples are not binding and do not claim to be complete regarding the circuits shown, equipping and any eventuality. The Application Examples do not represent customer-specific solutions. They are only intended to provide support for typical applications. You are responsible for ensuring that the described products are used correctly. These application examples do not relieve you of the responsibility to use safe practices in application, installation, operation and maintenance. When using these Application Examples, you recognize that we cannot be made liable for any damage/claims beyond the liability clause described. We reserve the right to make changes to these Application Examples at any time without prior notice.
If there are any deviations between the recommendations provided in these application examples and other Siemens publications − e.g. Catalogs − the contents of the other documents have priority.

We do not accept any liability for the information contained in this document.

Any claims against us – based on whatever legal reason – resulting from the use of the examples, information, programs, engineering and performance data etc., described in this Application Example shall be excluded. Such an exclusion shall not apply in the case of mandatory liability, e.g. under the German Product Liability Act (“Produkthaftungsgesetz”), in case of intent, gross negligence, or injury of life, body or health, guarantee for the quality of a product, fraudulent concealment of a deficiency or breach of a condition which goes to the root of the contract (“wesentliche Vertragspflichten”). The damages for a breach of a substantial contractual obligation are, however, limited to the foreseeable damage, typical for the type of contract, except in the event of intent or gross negligence or injury to life, body or health. The above provisions do not imply a change of the burden of proof to your detriment.

Any form of duplication or distribution of these Application Examples or excerpts hereof is prohibited without the expressed consent of the Siemens AG.

Copyright © Siemens AG 2015 All rights reserved

Security information

Siemens provides products and solutions with industrial security functions that support the secure operation of plants, solutions, machines, equipment and/or networks. They are important components in a holistic industrial security concept. With this in mind, Siemens’ products and solutions undergo continuous development. Siemens recommends strongly that you regularly check for product updates.

For the secure operation of Siemens products and solutions, it is necessary to take suitable preventive action (e.g. cell protection concept) and integrate each component into a holistic, state-of-the-art industrial security concept. Third-party products that may be in use should also be considered. For more information about industrial security, visit http://www.siemens.com/industrialsecurity.

To stay informed about product updates as they occur, sign up for a product-specific newsletter. For more information, visit http://support.industry.siemens.com.

Table of Contents

Warranty and Liability **4**

Table of Contents **5**

1 Burner Technology and Burner Library **7**

1.1 Library overview 7
1.2 Technological layout 7
General structure of a combustion plant 9
Generic operation sequence of a burner 10

2 System and Software Requirements **11**

2.1 General information 11
2.2 System 11
2.3 Software 11

3 Functions for Burner Technology **12**

3.1 Function for controlling the air dampers (F_AIRD) 13
3.1.1 Introduction 13
3.1.2 Connections 14
3.1.3 Mode of operation 16
3.1.4 Time diagrams 17
3.1.5 Status graph 19
3.2 Function for controlling the functions of a bas burner (F_GAS_BU) 22
3.2.1 Introduction 22
3.2.2 Connections 23
3.2.3 Diagnose F_GAS_BU 25
3.2.4 Mode of operation 26
3.2.5 Timing diagram 27
3.2.6 Status graph 29
3.3 Function for controlling the ignition of the burner (F_IGNTR) 32
3.3.1 Introduction 32
3.3.2 Connections 33
3.3.3 Diagnose F_IGNTR 35
3.3.4 Mode of operation 36
3.3.5 Time diagrams 37
3.3.6 Status graph 41
3.4 Function for controlling the functions of an oil burner (F_OIL_BU) 44
3.4.1 Introduction 44
3.4.2 Connections 45
3.4.3 Diagnosis F_OIL_BU 47
3.4.4 Mode of operation 49
3.4.5 Time diagrams 50
3.4.6 Status graph 54
3.5 Function for cleaning the oil burner (F_OIL_CLEAN) 58
3.5.1 Introduction 58
3.5.2 Connections 59
3.5.3 Diagnosis F_OIL_BU 60
3.5.4 Mode of operation 62
3.5.5 Timing diagram 63
3.5.6 Status graph 65
3.6 Function for position monitoring (F_POS_CH) 68
3.6.1 Introduction 68
3.6.2 Connections 69
3.6.3 Mode of operation 71

Copyright © Siemens AG 2015 All rights reserved

3.6.4 Timing diagram ... 72
3.6.5 Status graph ... 74
3.7 Function for gas tightness test (F_TIGHTN) ... 76
3.7.1 Introduction ... 76
3.7.2 Connections ... 77
3.7.3 Mode of operation ... 79
Function principle of the gas tightness test ... 79
Function principle F_TIGHTN ... 80
3.7.4 Time diagrams ... 81
3.7.5 Status graph ... 82

4 Interaction of the Blocks ... 84

4.1 Overview ... 84
4.2 Interconnection example F_GAS_BU ... 85
4.2.1 Explanations on interconnection example F_GAS_BU ... 86
4.3 Interconnection example F_OIL_BU ... 87
4.3.1 Explanation of interconnection example F_OIL_BU ... 88

5 Migration ... 90

6 Appendix ... 94

6.1 Signatures ... 94
6.2 Standards ... 94
6.3 Links & Literature ... 94
6.4 History ... 94

Copyright © Siemens AG 2015 All rights reserved

1 Burner Technology and Burner Library

This chapter provides a generic view of the safety functions used in a gas or oil burner.
The function example follows the guidelines of EN 746-2. The safety requirements are divided into individual implemented functions, which have each been programmed independently.

1.1 Library overview

What will you get?

The document on hand describes a library which contains code with uniquely defined interfaces. The functionality generally corresponds to the functionality of a burner control, if all parts of the library are used.

All of the library parts are described individually. Due to the complexity, a step-by-step instruction for integrating of the library is not provided. Instead, there is an interconnection example describing the most important interactions between the individual parts of the library.

Using the functions contained in this example is no guarantee for meeting the legal requirements.

1.2 Technological layout

The technological layout displayed on the page below shows a simplified configuration of a furnace as well as the relevant components for controlling the burner.

Copyright © Siemens AG 2015 All rights reserved

Figure 1-1 Technological layout

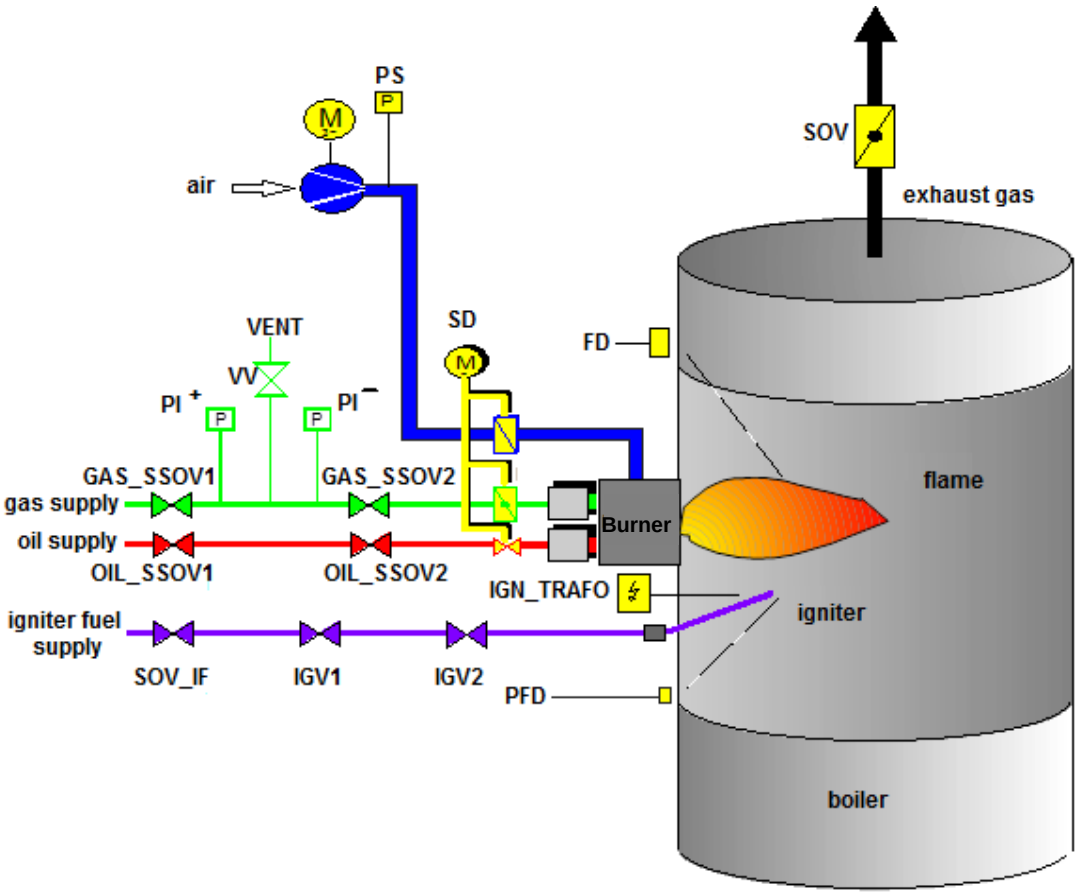

Table 1-1 Abbreviations used in the graphic

Abbreviation	Meaning
SOV_IF	Shut off valve igniter fuel
IGV1	Igniter gas valve 1
IGV2	Igniter gas valve 2
OIL_SSOV1	Oil safety shut off valve 1
OIL_SSOV2	Oil safety shut off valve 2
GAS_SSOV1	Gas safety shut off valve 1
GAS_SSOV2	Gas safety shut off valve 2
PI+	Pressure indicator, upper limit
PI-	Pressure indicator, lower limit
VV	Venting valve
VENT	Venting
IGN_TRAFO	Ignition transformer
FD	Flame detector
SD	Servo drive
SC	Supercharger
PS	Pressure sensor
SOV	Shut off valve
PFD	Pilot flame detector

Copyright © Siemens AG 2015 All rights reserved

General structure of a combustion plant

- Feed line to the bas burner with two safety shut-off valves
  - contains pressure switches and venting valves for performing the gas tightness test
- Feed line to the oil burner with two safety shut-off valves
- Feed line to igniter (pilot) with one manual shut-off valve and two safety shut-off valves
- Fresh air supply with fan
- Burnt gas exhaust with shut-off damper
- Ignition transformer to light the ignition flame
- Flame detectors for monitoring the ignition flame
- Main flame detector for monitoring the ignition flame
- Drive for regulating the gas or fuel/air mixture ratio

Copyright © Siemens AG 2015 All rights reserved

Generic operation sequence of a burner Before igniting the burner, a tightness test of the safety shut-off valves in the gas inlet must be performed from a certain gas burner capacity onward.

Prior to starting the gas or oil burner, the combustion chamber and burnt gas exhausts must be cleaned of residual oil and gas.
This pre-purge is performed by means of air pressure. The time required for this pre-ventilation depends on the type of burner and is calculated based on the EN 746-2 specifications. Pressure and mass/volume flow during the pre-purge, as well as later during operation, must be continuously monitored to prevent falling short of a minimum value.

The ignition of the first burner must be initiated immediately after the pre-ventilation has been completed. The ignition fuel supply valves are opened and the streaming gas is ignited by means of the ignition transformer.

An ignition flame must be detected by the ignition flame detector within the safety time specified in the EN 746-2. Once the additional safety startup requirements are met (e.g. gas/oil and air conditions fulfilled), the safety shut-off valves can be opened. Otherwise, the ignition process must be aborted.

The main burner must ignite within the safety time for the main ignition also defined by the EN 746-2; otherwise, a failure shutdown must be initiated (immediate closing of the safety shut-off valves with ventilation).

During startup and burner operation, the safety conditions relevant in the respective application must be monitored. The safety conditions result from a performed risk assessment using relevant standards (such as EN 746-2, for example).

If the required safety conditions are not met at a certain point in time, the fuel supply is not opened, or it is interrupted (fault shutdown).

A restart after a fault shutdown must not occur automatically, but be acknowledged manually. After the acknowledgement, the start process must in addition be initiated manually.

During operation, the fuel and air quantities are regulated via air dampers or fuel control valves. If the main flame detector reports the existence of a flame, the flow rate of the fuel can be increased depending on the required thermal energy. A monitored fuel ratio shall initiate the increase or reduction. A hazardous lack of air must be prevented here at any given time. A deficiency of air occurs if, for example, the gas control valve opens faster than the air damper while increasing the capacity.
For this reason, the EN 12067-2 standard, for example, demands opening the air damper first and then the gas control valve when increasing the capacity.

At the end of this document you are given an interconnection example which illustrates an interconnection of the individual functions.

Copyright © Siemens AG 2015 All rights reserved

2 System and Software Requirements

2.1 General information

The functions described in the following chapters can be used in combination with the Siemens SIMATIC fail-safe automation system for controlling gas and oil burners. More detailed information is given in the following chapter.

The functions of the library were developed with regards to individual sub-functions, in order to ensure a modular application when using several burners. The function scope of a burner control is fully functional for using all of the sub-functions.

2.2 System

The functions contained in this example can run on Siemens SIMATIC S7-300/400F systems in combination with fail-safe signal modules.

2.3 Software

The following Siemens SIMATIC software must be installed when using the functions contained in this example:

- STEP 7 V 5.x from V 5.3 + SP3
- S7 Distributed Safety V5.4
- S7 F Configuration Pack V5.4

Copyright © Siemens AG 2015 All rights reserved

3 Functions for Burner Technology

The following functionalities can be fulfilled with the existing library:

Table 3-1

Name	Function	Remark
F_TIGHTN	Function for controlling the gas tightness test	This function provides the leak test for the safety shut-off valves in the gas supply
F_GAS_BU	Function for controlling a bas burner	
F_OIL_BU	Function for controlling an oil burner	
F_IGNTR	Function for controlling the ignition of the burner	The ignition process is controlled with function F_IGNTR and F_GAS_BU (for gas burners) or F_IGNTR and F_OIL_BU (for oil burners) respectively. They check ignition conditions, monitor the safety time for the ignition, and control the ignition transformer as well as the ignition gas valves and safety shut-off valves. If the safety conditions for startup or burner operation are not met, the fuel supply is not enabled or interrupted by function F_GAS_BU or F_OIL_BU.
F_AIRD	Function for controlling the air dampers	This function controls the position of the air dampers during ignition and operation. Discrete feedback values, i.e. from position sensors, are required for this function.
F_OIL_CLEAN	Function for cleaning the oil burner	This function enables cleaning oil burners. A performed cleaning influences the duration of the monitoring time for an ignition in the F_OIL_BU function.
F_POS_CH	Function for position monitoring	This function monitors the position of the actuators for air and fuel. The function was developed for analog actuators.

Using the functions contained in this example is no guarantee for meeting the legal requirements.

Copyright © Siemens AG 2015 All rights reserved

3.1 Function for controlling the air dampers (F_AIRD)

3.1.1 Introduction

The fail-safe function F_AIRD for controlling the air damper handles the air damper control by means of feedback messages from position sensors.

This control function can be used to open or close air dampers completely or to move the air dampers into ignition position.

Figure 3-1

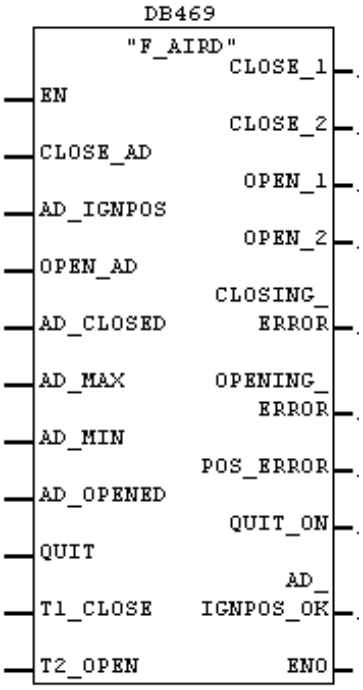

Note When using this function, F_TON (FB 185) must exist in the block folder.

Copyright © Siemens AG 2015 All rights reserved

3.1.2 Connections

All data type BOOL inputs have a default 0-signal.

All data type TIME inputs have T#0ms pre-assigned.

Table 3-2

Name	Data type	Description
Inputs		
CLOSE_AD	BOOL	**Air damper closing command** • 1-signal = Command for closing the air damper has been given • 0-signal = A command for opening the air damper can be given via OPEN_AD. When AD_IGNPOS is set, commands to CLOSE_AD are ignored.
AD_IGNPOS	BOOL	**Move air damper to ignition position** • 1-signal = Command for moving to ignition position has been given • 0-signal = A command for opening or closing the air damper can be given via OPEN_AD or CLOSE_AD. If AD_IGNPOS has been set, commands to CLOSE_AD and OPEN_AD are ignored.
OPEN_AD	BOOL	**Air damper opening command** • 1-signal = Command for opening the air damper has been given • 0-signal = A command for closing the air damper can be given via CLOSE_AD. When AD_IGNPOS is set, commands to CLOSE_AD are ignored.
AD_CLOSED	BOOL	**Air damper closed** - 1-signal = Feedback that the air damper has been closed. - 0-signal = Feedback that the air damper has not closed completely.
AD_OPENED	BOOL	**Air damper open** • 1-signal = Feedback that the air damper is open. • 0-signal = Feedback that the air damper has not opened completely.
AD_MAX	BOOL	**Air damper in ignition position <MAX** • 1-signal = Feedback that the air damper is below or on the maximal ignition position. • 0-signal = Feedback that the air damper is above the maximal ignition position.
AD_MIN	BOOL	**Air damper in ignition position >MIN** • 1-signal = Feedback that the air damper is above or on the minimal ignition position. • 0-signal = Feedback that the air damper is below the minimal ignition position.
QUIT	BOOL	**Error acknowledgement** • Error messages are reset with this input parameter. • The acknowledgement is only given at positive edge.

Copyright © Siemens AG 2015 All rights reserved

Name	Data type	Description
T1_CLOSE	TIME	**Time to close air damper** • Within this time, the air damper must have been closed; otherwise, an error signal will be pending at output CLOSING_ERROR. • Guide value: 0min < T1_CLOSE < 10min
T2_OPEN	TIME	**Time to open the air damper** • Within this time, the air damper must have been opened; otherwise, an error signal will be pending at output OPENING_ERROR. • Guide value: 0min < T2_OPEN < 10min
Outputs		
CLOSE_1	BOOL	**Air damper closing command** • 1-signal = Close air damper until feedback is given • 0-signal = Do not close air damper This output is set if: AD_IGNPOS=0, OPEN_AD=0 and CLOSE_AD=1. AD_IGNPOS=1 and AD_MAX=0 and AD_MIN=1
CLOSE_2	BOOL	**Air damper closing command** • 1-signal = Close air damper independent of the feedback • 0-signal = Do not close the air damper This output is set if: AD_IGNPOS=0, OPEN_AD=0 and CLOSE_AD=1.
OPEN_1	BOOL	**Air damper opening command** • 1-signal = Open air damper until feedback is given • 0-signal = Do not open the air damper This output is set if: AD_IGNPOS=0, OPEN_AD=1 and CLOSE_AD=0. AD_IGNPOS=1 and AD_MAX=1 and AD_MIN=0
OPEN_2	BOOL	**Air damper opening command** • 1-signal = Open air damper independent of the feedback • 0-signal = Do not open the air damper This output is set if: AD_IGNPOS=0, OPEN_AD=1 and CLOSE_AD=0.
CLOSING_ ERROR	BOOL	**Air damper closing error** • 1-signal = Error when closing the air damper • 0-signal = There is no error.
OPENING_ ERROR	BOOL	**Air damper opened error** • 1-signal = Error when opening the air damper. • 0-signal = There is no error.
POS_ERROR	BOOL	**AD_MIN/ AD_MAX or AD_OPENED/ AD_CLOSED error** • 1-signal = Plausibility error in the feedback. • 0-signal = There is no error.
QUIT_ON	BOOL	**Acknowledgement pending** • 1-signal: A 1-signal is pending at the QUIT input. • 0-signal: A 0-signal is pending at the QUIT input.

Copyright © Siemens AG 2015 All rights reserved

Name	Data type	Description
AD_IGNPOS_OK	BOOL	**Ignition position reached** • Air damper is located on a position between AD_MIN and AD_MAX. • A 1-signal is pending at the AD_IGN_POS input.

NOTICE	**Please note that the configured safety times must comply with the corresponding standards.**

3.1.3 Mode of operation

A response of input OPEN_AD or CLOSE_AD initiates opening or closing the air dampers.

Outputs OPEN_1 and OPEN_2 or CLOSE_1 and CLOSE_2 supply a 1-signal for controlling the actuators.

The inputs are switch-on interlocked, i.e. if a 1-signal is pending on either side, there will be no reaction at the outputs.

The opening command remains pending until a feedback is given, which is detected via input AD_OPENED=1 or AD_CLOSED=1. The feedback must be given within the configured time T2_OPEN or T1_CLOSE.

If the feedback is given on time, outputs OPEN_1 or CLOSE_1 are reset. Outputs OPEN_2 and CLOSE_2 remain set until the appropriate input (OPEN_AD or CLOSE_AD) is pending.

If not opening or closing within the configured time, an error message is output at output OPENING_ERROR or CLOSING_ERROR, which indicates an error at the air dampers.

A pending error is reset with a positive edge at input QUIT.
Error message POS_ERROR is pending if a 1-signal is active at AD_OPENED and AD_CLOSED simultaneously. Acknowledgement is required for this message. However, the error message is only output if no command is pending for starting up the ignition position via the AD_IGNPOS input.

If this is the case, the inputs AD_OPENED and AD_CLOSED are not evaluated. Instead, output OPEN_1 is set when the air damper has reached a position below the defined maximum, but not above the defined minimum (AD_MAX=1 and AD_MIN=0).

If the air damper is above the defined maximum and above the defined minimum (AD_MAX=0 and AD_MIN=1), output CLOSE_1 is set.

Error message POS_ERROR is pending if a 1-signal is active at AD_IGNPOS and simultaneously a 0-signal at AD_MIN and AD_MAX. Acknowledgement is also required in this case.

Copyright © Siemens AG 2015 All rights reserved

3.1.4 Time diagrams

Signal behavior

The picture below shows the signal behavior of function F_AIRD.

Figure 3-2

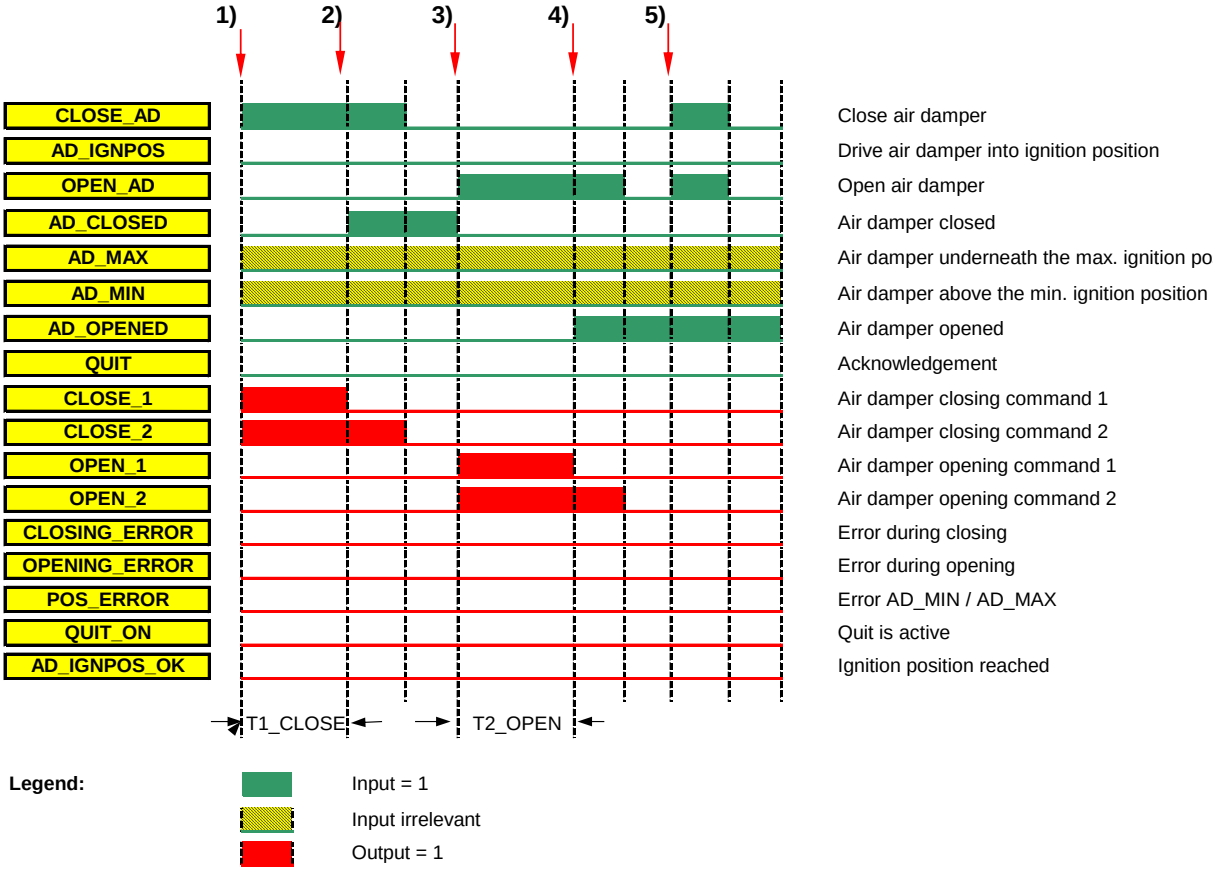

Description of the signal behavior:

1) Air damper closing command (CLOSE_AD=1)
   Air damper is closed (CLOSE_1=1, CLOSE_2=1)
   Timer T1_CLOSE starts
2) Air damper closed, within T1_CLOSE,
   Output CLOSE_1 is reset, CLOSE_2 remains set (until CLOSE_AD=0)
3) Air damper opening command (OPEN_AD=1)
   Air damper is opened (OPEN_1=1, OPEN_2=1)
   Timer T2_OPEN starts
4) Air damper open, within T2_OPEN,
   Output OPEN_1 is reset, OPEN_2 remains set (until OPEN_AD=0)
5) Inputs CLOSE_AD and OPEN_AD are switch-on interlocked; applying a 1-signal to both inputs does not yield any reaction

Copyright © Siemens AG 2015 All rights reserved

Signal behavior for the ignition position of the air dampers

The picture below displays the signal behavior of function F_AIRD for an ignition position of the air dampers.

Figure 3-3

Description of the signal behavior for the ignition position of the air dampers

1) "Bring air damper in ignition position" command pending (AD_IGNPOS=1)
   Air damper above the maximum (AD_MAX=0)
   Air damper will be closed (CLOSE_1 = 1)
2) Air damper below the maximum (AD_MAX=1)
   Air damper above the minimum (AD_MIN=1)
   Air damper in ignition position (AD_IGNPOS_OK=1)
3) Air damper below the minimum (AD_MIN=0)
   Air damper will be opened (OPEN_1 = 1)
4) Air damper below the maximum (AD_MAX=1)
   Air damper above the minimum (AD_MIN=1)
   Air damper in ignition position (AD_IGNPOS_OK=1)
5) "Air damper in ignition position" no longer pending (AD_IGNPOS=0)
   AD_IGNPOS_OK=0

Copyright © Siemens AG 2015 All rights reserved

3.1.5 Status graph

Figure 3-4

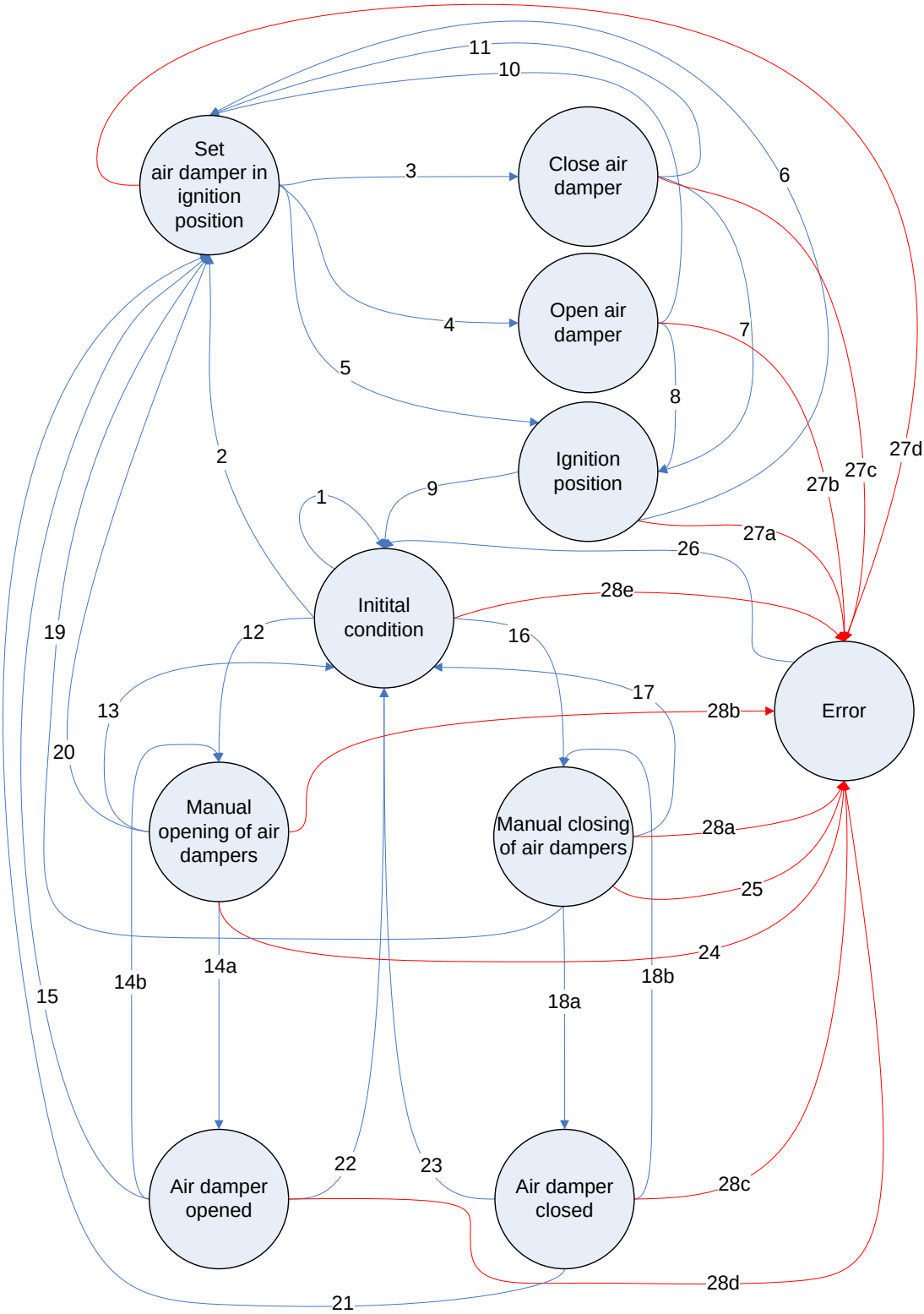

Copyright © Siemens AG 2015 All rights reserved

Explanation of the status graph

Table 3-3

Transition	Transition conditions
1	OPEN_AD == 1 **AND** CLOSE_AD == 1
2	AD_IGNPOS == 1
3	AD_MAX == 0 **AND** AD_MIN == 1
4	AD_MIN == 0 **AND** AD_MAX == 1
5	AD_MAX == 1 **AND** AD_MIN == 1
6	AD_MIN == 0 **OR** AD_MAX == 0
7	AD_MAX == 1
8	AD_MIN == 1
9,10,11	AD_IGNPOS == 0
12	OPEN_AD == 1 **AND** AD_IGNPOS == 0
12,22	OPEN_AD == 0
14a	AD_OPENED == 1
14b	AD_OPENED == 0
15,19,20,21	AD_IGNPOS == 1
16	CLOSE_AD == 1 **AND** AD_IGNPOS == 0
17,23	CLOSE_AD == 0
18a	AD_CLOSED == 1
18b	AD_CLOSED == 0
24	T2_OPEN expired
25	T1_OPEN expired
26	QUIT == 1
27a-d	AD_MIN == 0 **AND** AD_MAX == 0
28a-d	AD_CLOSED == 1 **AND** AD_OPENED == 1

Copyright © Siemens AG 2015 All rights reserved

Table 3-4

State		Outputs which are switched
Set air damper to ignition position		No outputs switched
Close air damper		CLOSE_1:= TRUE
Open air damper		OPEN_1:= TRUE
Ignition position reached		AD_IGNPOS_OK := TRUE
Manual opening of air dampers		OPEN_1 := TRUE OPEN_2 := TRUE Timer T2_OPEN starts
Manual closing of air dampers		CLOSE_1 := TRUE CLOSE_2 := TRUE Timer T1_CLOSE starts
Air damper open		OPEN_2 := TRUE OPEN_1 := FALSE
Air damper closed		CLOSE_2 := TRUE CLOSE_1 := FALSE
Error	out of 25	CLOSING_ERROR := TRUE
	out of 24	OPENING_ERROR := TRUE
	out of 27 a-d	POS_ERROR := TRUE
	out of 28 a-e	POS_ERROR := TRUE

Copyright © Siemens AG 2015 All rights reserved

3.2 Function for controlling the functions of a bas burner (F_GAS_BU)

3.2.1 Introduction

The failsafe function F_GAS_BU initiates starting a gas burner by controlling the ignition function.
After successfully igniting the igniter, this function opens the safety shut-off valves of the burner and checks whether an ignition has occurred within a defined time.

These functions are realized by the function in single-burner and multi-burner mode.

Figure 3-5

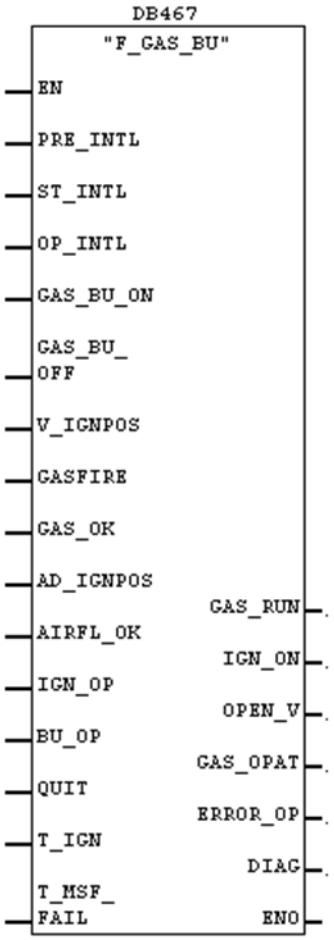

Note When using this function, the function blocks F_TON (FB 185) and F_BO_W (FC176) must exist in the block folder.

Copyright © Siemens AG 2015 All rights reserved

3.2.2 Connections

All data type BOOL inputs, except for OP_INTL, have a default 0-signal.
All data type TIME inputs have T#0ms pre-assigned.

Table 3-5

Name	Data type	Description
Inputs		
PRE_INTL	BOOL	**Switch on interlock** • If a 1-signal is active at this input, the gas burner function is ready for operation. After the burner has been started via GAS_BU_ON, this input is no longer evaluated
ST_INTL	BOOL	**Start-up interlock** • If a 1-signal is active at this input, the gas burner function can be started. This input is only evaluated during the startup process (starting with GAS_BU_ON=1 to GAS_OPAT=1)
OP_INTL	BOOL	**Operation interlock** • If a 1-signal is active at this input, the gas burner function can be operated. This input is only evaluated after the function is in operation (GAS_OPAT=1)
GAS_BU_ON	BOOL	**Start gas burner command** • A positive edge starts the burner function.
GAS_BU_OFF	BOOL	**Stop gas burner command** • A positive edge terminates the operation of the burner.
V_IGNPOS	BOOL	**Gas control valve in ignition position** • 1-signal: gas control valve in ignition position. • 0-signal: gas control valve is not in ignition position.
GASFIRE	BOOL	**Flame detected** • 1-signal: flame detected • 0-signal: no flame exists If a flame has already been detected prior to the startup and other burners are in operation, it is assumed, that other burners are ignited and therefore an ignition position needs not be approached for the fuel valves and air dampers.
GAS_OK	BOOL	**Gas criteria fulfilled** • 1-signal: gas criteria fulfilled • 0-signal: gas criteria not fulfilled Gas criteria are all fuel-related conditions necessary for a safe operation
AD_IGNPOS	BOOL	**Air damper in ignition position** • 1-signal: air damper in ignition position • 0-signal: air damper not in ignition position

Copyright © Siemens AG 2015 All rights reserved

Name	Data type	Description
AIRFL_OK	BOOL	**Joint air flow criteria fulfilled** • 1-signal: air criteria fulfilled • 0-signal: air criteria not fulfilled Air criteria are all combustion air related conditions necessary for a safe operation
IGN_OP	BOOL	**Igniter in operation** • 1-signal: igniter successfully ignited • 0-signal: igniter did not ignite
BU_OP	BOOL	**Burner in operation** • 1-signal: other burners in operation • 0-signal: other burners not in operation If other burners are already in operation and a flame detected prior to startup, it is assumed that other burners are ignited and therefore an ignition position needs not be approached for fuel valves and air dampers.
QUIT	BOOL	**Error acknowledgement** • Error messages are reset with this input parameter. The acknowledgement is only given at positive edge
T_IGN	TIME	**Gas burner safety time** • Within this time, the burner must have ignited successfully. Guide value: 0min < T_IGN < 1min
T_MFS_FAIL	TIME	**Monitoring time for flame detector** If an ignition flame is reported for longer than time T_MFS_FAIL (GASFIRE=1), even though the gas burner function is not in operation (GAS_OPAT=0), an error is detected.
Outputs		
GAS_RUN	BOOL	**Gas startup program active** • 1-signal: gas startup program in operation • 0-signal: gas startup program not started or conditions for the start not fulfilled
IGN_ON	BOOL	**Switch on the ignition function** • 1-signal: the ignition function is controlled • 0-signal: the ignition function is not controlled
OPEN_V	BOOL	**Controlling the safety shut-off valves** • 1-signal: safety shut-off valves are opened • 0-signal: safety shut-off valves are closed or remain closed
GAS_OPAT	BOOL	**Gas burner in operation after T_IGN** • 1-signal: burner was ignited within the safety time • 0-signal: burner not in operation
ERROR_OP	BOOL	**Cancelled operation** • 1-signal: one or several errors exist, which have occurred during operation • 0-signal: no errors exist.
DIAG	WORD	**Diagnostic word** • Information on block status and errors is output at this output

Copyright © Siemens AG 2015 All rights reserved

NOTICE	**Please note that the configured safety times must comply with the corresponding standards.**

3.2.3 Diagnose F_GAS_BU

Table 3-6

Bit No.	Description	Reset condition
0	Start command triggered while pre-interlocking has not been set (GAS_BU_ON=1 and PRE_INTL=0)	• PRE_INTL=1 • positive edge at QUIT
1	Start command triggered while startup-interlocking has not been set (GAS_BU_ON=1 and ST_INTL=0	• ST_INTL=1 • positive edge at QUIT
2	Start command triggered while stop command exists (GAS_BU_ON=1 and GAS_BU_OFF=1)	• BU_OFF=0 • positive edge at QUIT
3	Start command triggered while unacknowledged error exists (GAS_BU_ON=1 and ERROR_OP=1	• positive edge at QUIT
4	The fuel control valve is not in ignition position while the gas startup program is running or started (GAS_BU_ON=1 and V_IGNPOS=0)	• Switching over to multi-burner mode (BU_OP=1 and GASFIRE=1)) • positive edge at QUIT • new start command (GAS_BU_ON=1)
5	The air damper is not in ignition position while the gas startup program is running or started (GAS_BU_ON=1 and V_IGNPOS=0)	• Switching over to multi-burner mode (BU_OP=1 and GASFIRE=1)) • positive edge at QUIT • new start command (GAS_BU_ON=1)
6	Flame detector does not detect a flame within the safety time (GASFIRE=0 after T_IGN or T_FILL_IGN has expired)	• positive edge at QUIT • new start command (GAS_BU_ON=1)
7	Air criteria not fulfilled (AIRFL_OK=0)	• positive edge at QUIT • new start command (GAS_BU_ON=1)
8	GAS conditions not fulfilled (GAS_OK=0)	• positive edge at QUIT • new start command (GAS_BU_ON=1)
9	Reserve	•
10	Reserve	•
11	Igniter is controlled but not yet in operation (IGN_OP=0 and IGN_ON=1)	• IGN_OP=1 • positive edge at QUIT • new start command (GAS_BU_ON=1)
12	Operation interlocks have failed (OP_INTL=0)	• positive edge at QUIT • new start command (GAS_BU_ON=1)
13	Flame detector reports flame even though no burner is in operation (GASFIRE=1 and BU_OP=0)	• positive edge at QUIT
14	Burner was not ignited within the safety	• positive edge at QUIT

Copyright © Siemens AG 2015 All rights reserved

Bit No.	Description	Reset condition
	time (GASFIRE=0 after T_IGN or T_FILL_IGN has expired)	• new start command (GAS_BU_ON=1)
15	Reserve	

3.2.4 Mode of operation

The F_GAS_BU function is started by a positive edge at the GAS_BU_ON input. However, the conditions of the switch-on interlock (PRE_INTL=1) and the startup-interlock (ST_INTL=1) must be fulfilled.

If the burner is in single operation mode, it cannot be started while the main flame detector reports a flame (GASFIRE=1). In multi-burner mode (BU_OP=1), the gas startup program starts even if a flame has been detected.

If the burner is in single mode, the fuel control valves and the air dampers need to be in ignition position (V_IGNPOS and AD_IGNPOS=1).

In both cases, the air and gas criteria (e.g. gas pressure valid) must be fulfilled (AIRFL_OK=1 and GAS_OK=1) for controlling the ignition function.

If all these conditions apply, output GAS_RUN is set to "1" and a control of the ignition function (output IGN_ON=1) follows.

If during the ignition process one or several conditions GAS_OK or AIRFL_OK (in single burner mode additionally AD_IGNPOS and V_IGNPOS, in multi-burner mode GASFIRE and BU_OP) are no longer fulfilled and then become active again, a new start command must first be sent to GAS_BU_ON before GAS_RUN has a 1-signal again.

Upon the expiry of safety time T_IGN at the latest, a flame needs to be detected via the GASFIRE input. Furthermore, a 1-signal must then be pending at the OP_INTL (operation interlock) input at the latest. A successful ignition of the burner is signaled via the GAS_OPAT output.

During operation, the operation locks, air conditions and gas conditions must be fulfilled and the flame exist. (i.e. a 1-signal must be active at inputs OP_INTL, AIRFL_OK, GAS_OK and GASFIRE)

A fault shutdown is performed if a 0-signal is active at the input of the operation interlock (OP_INTL), of the gas conditions (GAS_OK), the air conditions (AIRFL_OK) or at the input of the main flame (GASFIRE). If this is the case, the ERROR_OP output will be set. It must be reset with a positive edge at input QUIT prior to the next start.

Using block F_GAS_BU, the signal from the main flame detector is also checked for plausibility. If the burner is switched off, the "GASFIRE" signal must also be reset within the configured time: "T_MFS_FAIL" ("Main Flame Sensor Failure Time"). If this is does not happen, diagnostic bit 13 is set.

The operation of the burner can be stopped at any time with a positive edge at the GAS_BU_OFF input.

Copyright © Siemens AG 2015 All rights reserved

3.2.5 Timing diagram

The picture below shows the signal behavior of function F_GAS_BU.

Figure 3-6

Case 1: Single-burner operation mode

1) Interlocking fulfilled (PRE_INTL=1)
   Startup interlocking fulfilled (ST_INTL=1)
   Fuel control valves in ignition position (V_IGNPOS=1)
   Gas criteria fulfilled (GAS_OK=1)
   Air dampers in ignition position (AD_IGNPOS=1)
   Air criteria fulfilled (AIRFL_OK=1)
2) Starting the burner with positive edge at input GAS_BU_ON
   Gas startup program running (GAS_RUN = 1)
   Igniter controlled (IGN_ON=1)
3) Igniter in operation (IGN_OP=1)
   Safety shut-off valves are opened (OPEN_V=1)
   Safety time T_IGN is started
4) Within the safety time, the operating conditions are fulfilled(OP_INTL=1)
   A flame is detected (GASFIRE=1)
5) Burner successfully ignited (GAS_OPAT=1)
6) Cancellation by stop command at input GAS_BU_OFF

Copyright © Siemens AG 2015 All rights reserved

Case 2: multi-burner operation mode

Several burners are operated in a combustion chamber; the first burner is ignited by means of the preceding time diagram. “Flame detected” exists for all further burners (GASFIRE=1). Inputs V_IGNPOS and AD_IGNPOS need not be pending for these burners.

1) Interlocking fulfilled (PRE_INTL=1)
   Startup interlocking fulfilled (ST_INTL=1)
   Flame was detected (GASFIRE=1)
   Gas criteria fulfilled (GAS_OK=1)
   Air criteria fulfilled (AIRFL_OK=1)
   Other burners are in operation (BU_OP=1)
2) Starting the burner with positive edge at input GAS_BU_ON
   Gas startup program running (GAS_RUN = 1)
   Igniter controlled (IGN_ON=1)
3) Igniter in operation (IGN_OP=1)
   Safety shut-off valves are opened (OPEN_V=1)
   Safety time T_IGN is started
4) Within the safety time, all operation conditions are fulfilled
   (OP_INTL=1)
   Flame is detected (GASFIRE=1)
5) Burner successfully ignited (GAS_OPAT=1)
6) Cancellation by stop command at input GAS_BU_OFF

Copyright © Siemens AG 2015 All rights reserved

3.2.6 Status graph

Figure 3-7

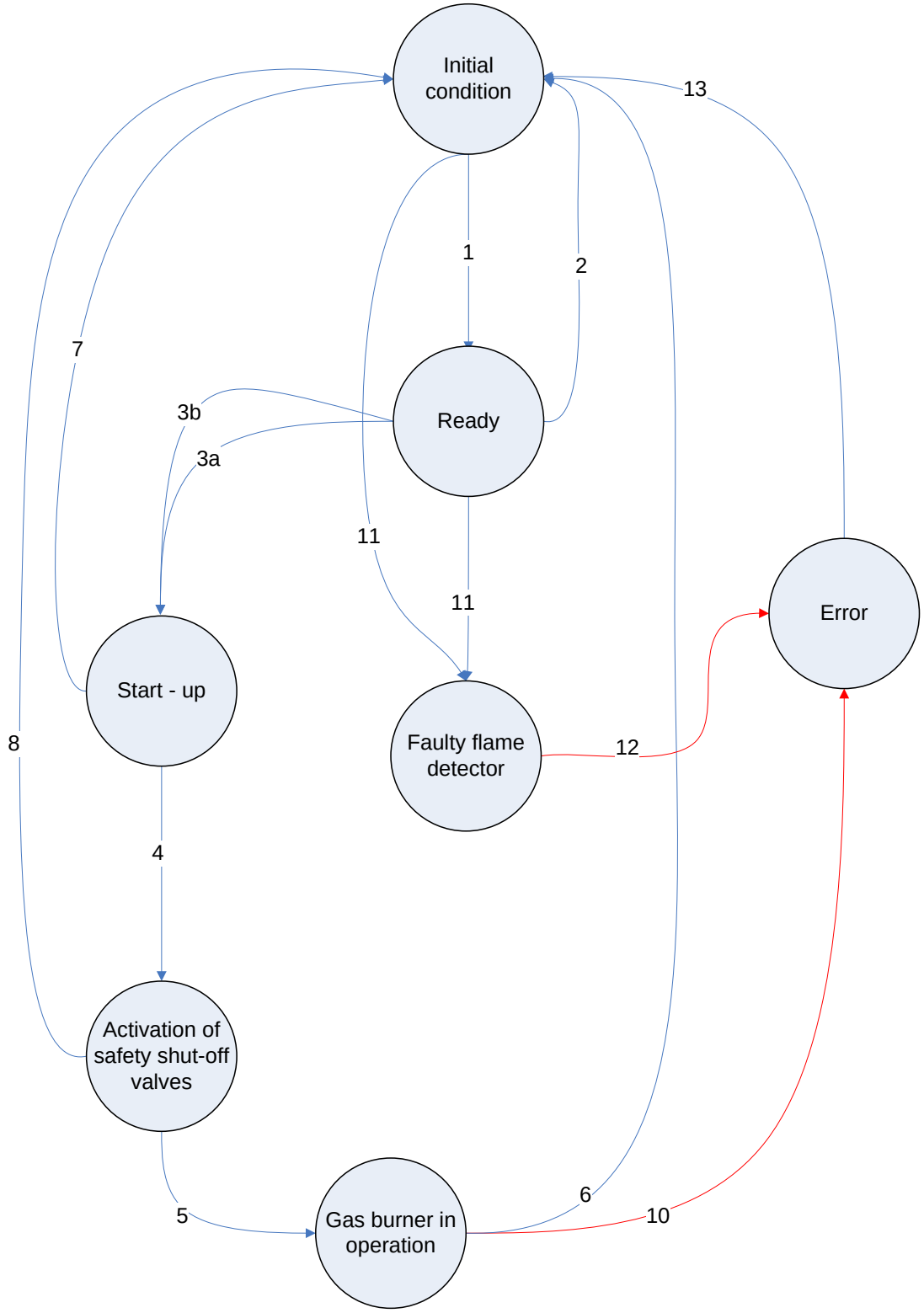

Copyright © Siemens AG 2015 All rights reserved

Explanation of the status graph

Table 3-7

Transition	Transition conditions
1	PRE_INTL == 1
2	PRE_INTL == 0
3a	**Single-burner operation mode:** GAS_BU_ON == pos. edge **AND** ST_INTL == 1 **AND** GAS_BU_OFF == 0 **AND** GAS_OK ==1 **AND** AIRFL_OK == 1 **AND** V_IGNPOS == 1 **AND** AD_IGNPOS == 1
3b	**Multi-burner operation mode:** GAS_BU_ON == pos. edge **AND** ST_INTL == 1 **AND** GAS_BU_OFF == 0 **AND** GAS_OK ==1 **AND** AIRFL_OK == 1 **AND** GASFIRE ==1 **AND** BU_OP ==1
4	IGN_OP == 1
5	GASFIRE == 1 **AND** OP_INTL == 1 **AND** T_IGN expired
6	GAS_BU_OFF == 1
7	GAS_BU_OFF == 1 **OR** GAS_OK == 0 **OR** AIRFL_OK == 0 **OR** ST_INTL == 0 **OR** V_IGNPOS == 0 **OR** AD_IGNPOS == 0 **OR** (BU_OP == 0 **OR** GASFIRE == 0) for multi-burner operation)
8	GAS_OK == 0 **OR** AIRFL_OK == 0 **OR** ST_INTL == 0 **OR** GAS_BU_OFF == 1 **OR** IGN_OP == 0 **OR** V_IGNPOS == 0 **OR** AD_IGNPOS == 0 **OR** Safety time T_IGN expired **OR** (BU_OP == 0 **OR** GASFIRE == 0) for multi-burner operation)
9	Safety time T_IGN expired **AND** (OP_INTL == 0 **OR** (GASFIRE == 0 **AND** BU_OP == 1))
10	OP_INTL == 0 **OR** GASFIRE == 0 **OR** AIRFL_OK == 0 **OR** GAS_OK == 0
11	GASFIRE == 1
12	Monitoring time T_MFS_FAIL expired
13	QUIT == pos. edge **AND** GASFIRE == 0

Copyright © Siemens AG 2015 All rights reserved

Table 3-8

State	Outputs which are switched	
Initial state	No outputs switched	
Ready	No outputs switched	
Startup	GAS_RUN := TRUE IGN_ON := TRUE	
Controlling the safety shut-off valves	OPEN_V := TRUE Safety time T_IGN is started	
Gas burner in operation	Safety time expired and no error has occurred GAS_OPAT := TRUE OP_INTL := TRUE	
Error	out of 10	ERROR_OP := TRUE GAS_OPAT:= FALSE OPEN_V := FALSE
	out of 12	DIAG 13 := TRUE
Faulty flame detector	Timer T_MFS_FAIL starts	

Copyright © Siemens AG 2015 All rights reserved

3.3 Function for controlling the ignition of the burner (F_IGNTR)

3.3.1 Introduction

The control of the ignition of burners is realized with the failsafe function F_IGNTR. It takes on the control of the valves for the infeed of the ignition fuel and the ignition transformer which produces the ignition flame.

In the event of errors, the controlled components are turned fail-safe.

When the combustion plant is not in operation, it is possible to use the function to perform a test of the ignition function.

Figure 3-8

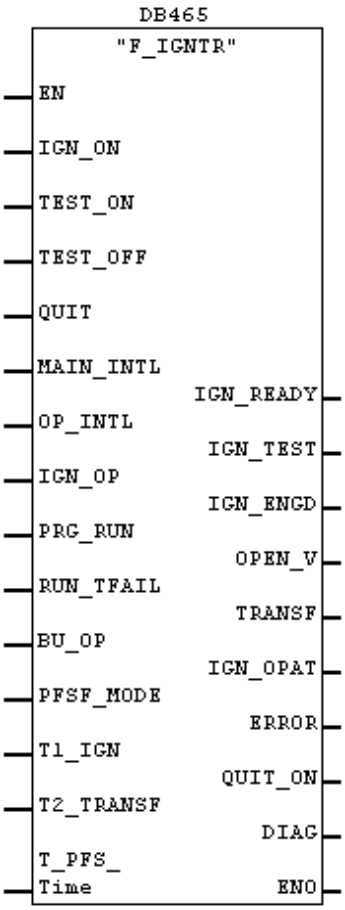

Note When using this function, the function blocks F_TON (FB 185), F_TP (FB184) and F_BO_W (FC176) must exist in the block folder.

Copyright © Siemens AG 2015 All rights reserved

3.3.2 Connections

All data type BOOL inputs have a default 0-signal.

All data type TIME inputs have T#0ms pre-assigned.

Table 3-9

Name	Data type	Description
Inputs		
IGN_ON	BOOL	**“Switch on the ignition function” command** • The ignition function is switched on at this input with a 1-signal, providing the main interlock is fulfilled A possibly running ignition test is cancelled.
TEST_ON	BOOL	**“Switch on the ignition test” command** • The ignition function is switched on at this input with a positive edge, providing the main interlock is fulfilled and a 1-signal is active at TEST_OFF.
TEST_OFF	BOOL	**“Switch off the ignition test” command** The ignition test is terminated if a 0-signal is active at TEST_OFF.
QUIT	BOOL	**Acknowledgement error** • Error messages are reset with this input parameter. The acknowledgement is only given at positive edge.
MAIN_INTL	BOOL	**Main interlock fulfilled** • If a 1-signal is active at this input, the ignition function is ready for operation. Output IGN_READY will be set.
OP_INTL	BOOL	**Operation interlock** • Further conditions, which only become relevant at the time of the actual ignition, must be interconnected to this input. If a 1-signal is active at this input, the ignition function can be started.
IGN_OP	BOOL	**Ignition flame existing** Input from the ignition flame detector • IGN_OP=0: no ignition flame existing • IGN_OP=1: ignition flame existing
PRG_RUN	BOOL	**Other programs are running** As long as a 1-signal is pending here, other functions are in operation, which prevent the ignition test from being switched on.
RUN_TFAIL	BOOL	**Exceeded runtime** Input for runtime monitoring • If a 1-signal is pending at this input, an ignition is no longer possible. An interlock can be realized via this input after several ignition attempts.
BU_OP	BOOL	**Burner in operation** As long as a 1-signal is pending here, other functions are in operation, which prevent the ignition test from being switched on.

Copyright © Siemens AG 2015 All rights reserved

Name	Data type	Description
PFSF_MODE	BOOL	**Ignition flame monitoring ON/OFF** Plausibility check of the ignition flame: if an ignition flame is reported for longer than time T_PFS_FAIL (IGN_OP=1), even though the ignition function is not in operation (IGN_OPAT=0), an error is detected. • PFSF_MODE=0, the plausibility check is activated • PFSF_MODE=1, the plausibility check is deactivated
T1_IGN	TIME	**Igniter safety time** Within this safety time, an ignition flame must be detected.
T2_TRANSF	TIME	**Time for ignition transformer control pulse** Within this time, the ignition transformer is controlled.
T_PFS_FAIL	TIME	**Monitoring time for ignition flame detector** If an ignition flame is reported for longer than time T_PFS_FAIL (IGN_OP=1), even though the ignition function is not in operation (IGN_OPAT=0), an error is detected.
Outputs		
IGN_READY	BOOL	**Ignition function ready for operation** Reports the ignition function ready for operation: • 1-signal = Main interlock fulfilled and no error stored • 0-signal = Ignition function not ready for operation.
IGN_TEST	BOOL	**Ignition test in progress** • Reports the ignition test active
IGN_ENGD	BOOL	**Controlling the igniter** • The ignition function is in operation • Main interlock and operation interlock is fulfilled • Ignition function or ignition test were started
OPEN_V	BOOL	**Controlling the ignition gas valves** • 1-signal: ignition gas valves are opened • 0-signal: ignition gas valves are closed
TRANSF	BOOL	**Controlling the ignition transformer** • 1-signal: ignition transformer is controlled • 0-signal: ignition transformer stays off
IGN_OPAT	BOOL	**Gas burner in operation after T1_IGN** • 1-signal: the igniter was ignited within the safety time • 0-signal: igniter not in operation If the ignition was switched off (IGN_ON or TEST_OFF = 0) and the flame still exists (IGN_OP = 1), the output remains set. It is reset if the flame no longer exists.
ERROR	BOOL	**Ignition error** • 1-signal: one or several errors exist. • 0-signal: no errors exist in the ignition process.
QUIT_ON	BOOL	**Acknowledgement pending at input QUIT** • 1-signal: a 1-signal is pending at the QUIT input. • 0-signal: a 0-signal is pending at the QUIT input.
DIAG	WORD	**Diagnostic word** Information on block status and errors is output at this output, see

Copyright © Siemens AG 2015 All rights reserved

NOTICE	**Please note that the configured safety times must comply with the corresponding standards.**

3.3.3 Diagnose F_IGNTR

Table 3-10

Bit No.	Description	Reset condition
0	Start command or test start command triggered while main interlocking inactive (IGN_ON=1 or TEST_ON= 1 and MAIN_INTL=0)	MAIN_INTL=1 positive edge at QUIT
1	Start command or test start command set while runtime exceeded (IGN_ON=1 or TEST_ON= 1 and RUN_TFAIL=0)	RUN_TFAIL=0 positive edge at QUIT
2	Start command or test start command set while ignition function failed (IGN_ON=1 or TEST_ON= 1 and ERROR=1)	positive edge at QUIT
3	Reserve	
4	Operation interlock not fulfilled (OP_INTL=0)	positive edge at QUIT
5	Reserve	
6	Signal from ignition flame detector missing (IGN_OP=0)	positive edge at QUIT
7	Reserve	
8	Test start command set while other programs are running (TEST_ON = 1 and PRG_RUN =1)	PRG_RUN=0 positive edge at QUIT
9	Test start command set while “Switch off ignition test” is not set (TEST_ON = 1 and TEST_OFF =0)	TEST_OFF=1 positive edge at QUIT
10	Test start command set while other burner in operation (TEST_ON= 1 and BU_OP=1)	BU_OP=0 positive edge at QUIT
11	Test start command set while igniter is controlled (TEST_ON= 1 and IGN_ON=1)	IGN_ON=0 positive edge at QUIT
12	Reserve	
13	The ignition flame detector gives a signal, even though the ignition function is not in operation (IGN_OP=1 and IGN_ENGD=0)	positive edge at QUIT
14	Monitoring time of the ignition process exceeded	positive edge at QUIT
15	Reserve	

Copyright © Siemens AG 2015 All rights reserved

3.3.4 Mode of operation

The ignition function is started with a 1-signal coming from function F_GAS_BU or F_OIL_BU, providing the function is ready for operation.
It is ready for operation if all safety criteria (main interlocking and operation interlock) are fulfilled, no other programs are in operation, and no unacknowledged failure is pending.

The ignition function can also be started independently by functions F_GAS_BU or F_OIL_BU with an active 1-signal at TEST_ON and TEST_OFF, providing the function is ready for operation.

Output OPEN_V then provides a 1-signal and triggers the ignition gas valves to open. Within the configured safety time, the ignition transformer is now controlled via the TRANSF output (pulse duration T2_TRANSF).
A 1-signal from the ignition flame detector should now be pending at input IGN_OP. If this is the case, output IGN_OPAT supplies a 1-signal (igniter in operation); otherwise, there is a failure message at output ERROR, which cancels the ignition process. The failure message can be reset with QUIT. The ignition process must then be restarted manually.

Using block F_IGNTR, the signal from the ignition flame detector can also be monitored. When the igniter is switched off, the "IGN_OP" signal (signal from the ignition flame detector) should also be reset within the configured time "T_PFS_FAIL" ("Pilot Flame Sensor Failure Time"), otherwise, diagnostic bit 13 is set. This means, that the ignition flame detector supplies a wrong signal. As long as this error is pending, the ignition flame cannot be restarted.

It is also possible to switch this function off, for example, because signal IGN_OP is supplied by a flame detector which also monitors the main flame. In this case, IGN_OP is also "1" when the igniter is switched off.
In order to prevent a failure message, input "PFSF_MODE" can be set to "1"; IGN_OP is not monitored in this case.

Copyright © Siemens AG 2015 All rights reserved

3.3.5 Time diagrams

Signal behavior

The picture below shows the signal behavior of function F_IGNTR.

Figure 3-9

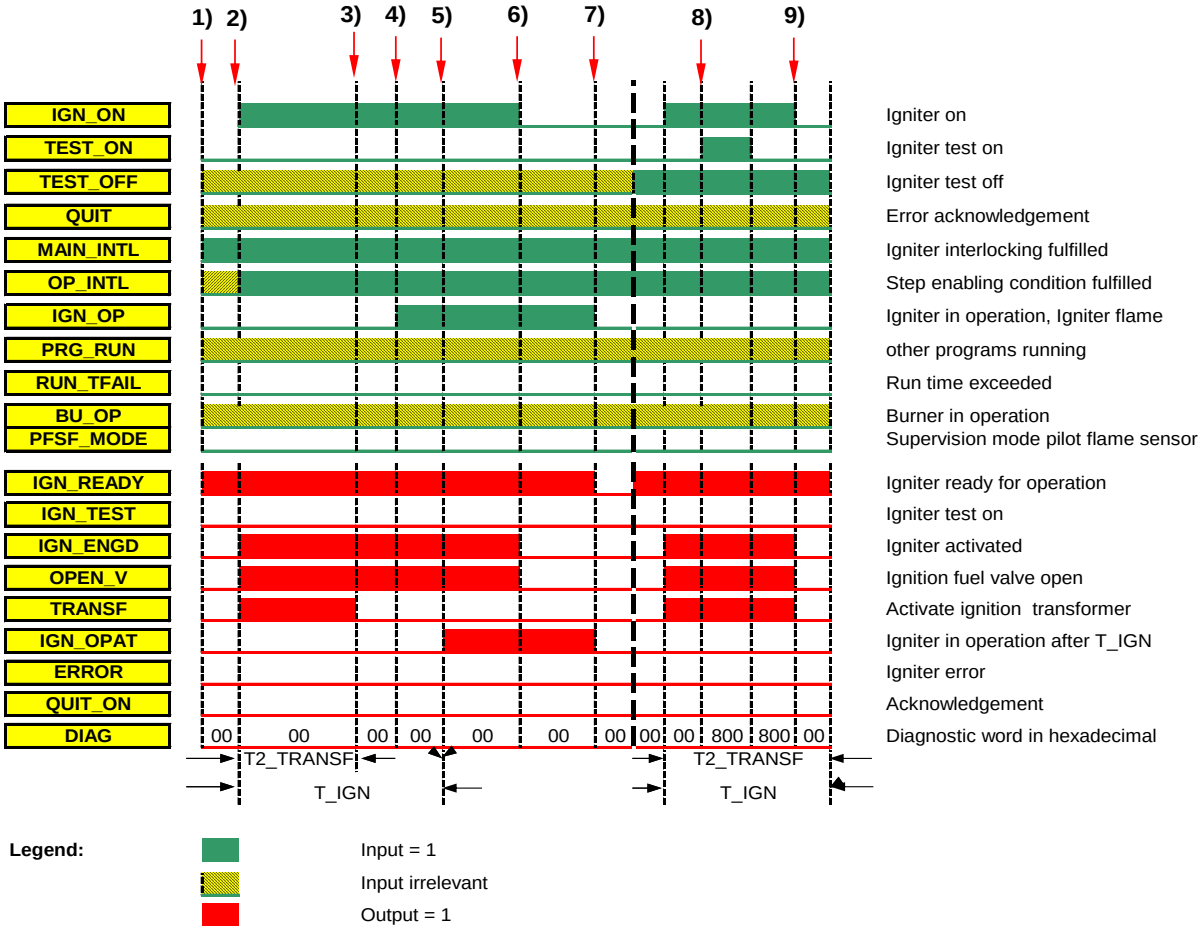

Copyright © Siemens AG 2015 All rights reserved

Description of the signal behavior:

1) Main interlocking fulfilled (MAIN_INTL=1)
   Ignition function ready for operation (IGN_READY=1)
2) Operation interlock fulfilled (OP_INTL=1)
   Start of ignition function (IGN_ON=1)
   “Ignition function controlled” message (IGN_ENGD=1)
   Ignition gas valves opened (OPEN_V=1)
   Ignition transformer controlled (TRANSF=1)
   Timer T1_IGN for ignition safety time starts
   Timer T2_TRANSF for ignition transformer starts
3) Time T2_TRANSF has expired
   Ignition transformer no longer controlled (TRANSF=0)
4) IGN_OP=1: flame detector reports ignition flame
5) After T1_IGN has expired, and IGN_OP pending, the message
   “igniter successfully ignited” (IGN_OPAT=1) is output
6) Igniter function switched off (IGN_ON=0)
   Igniter function no longer in operation (IGN_ENGD=0)
   Ignition gas valves are closed (OPEN_V=0)
7) The ignition flame is deleted (IGN_OP=0)
   Message at output IGN_OPAT is reset
8) Igniter test is started when ignition command is pending (DIAG 800h)
9) If IGN_ON is reset prior to ignition, the ignition process
   is cancelled.

Copyright © Siemens AG 2015 All rights reserved

Signal behavior of the igniter test

The picture below shows the optimal signal behavior of function F_IGNTR during testing.

Figure 3-10

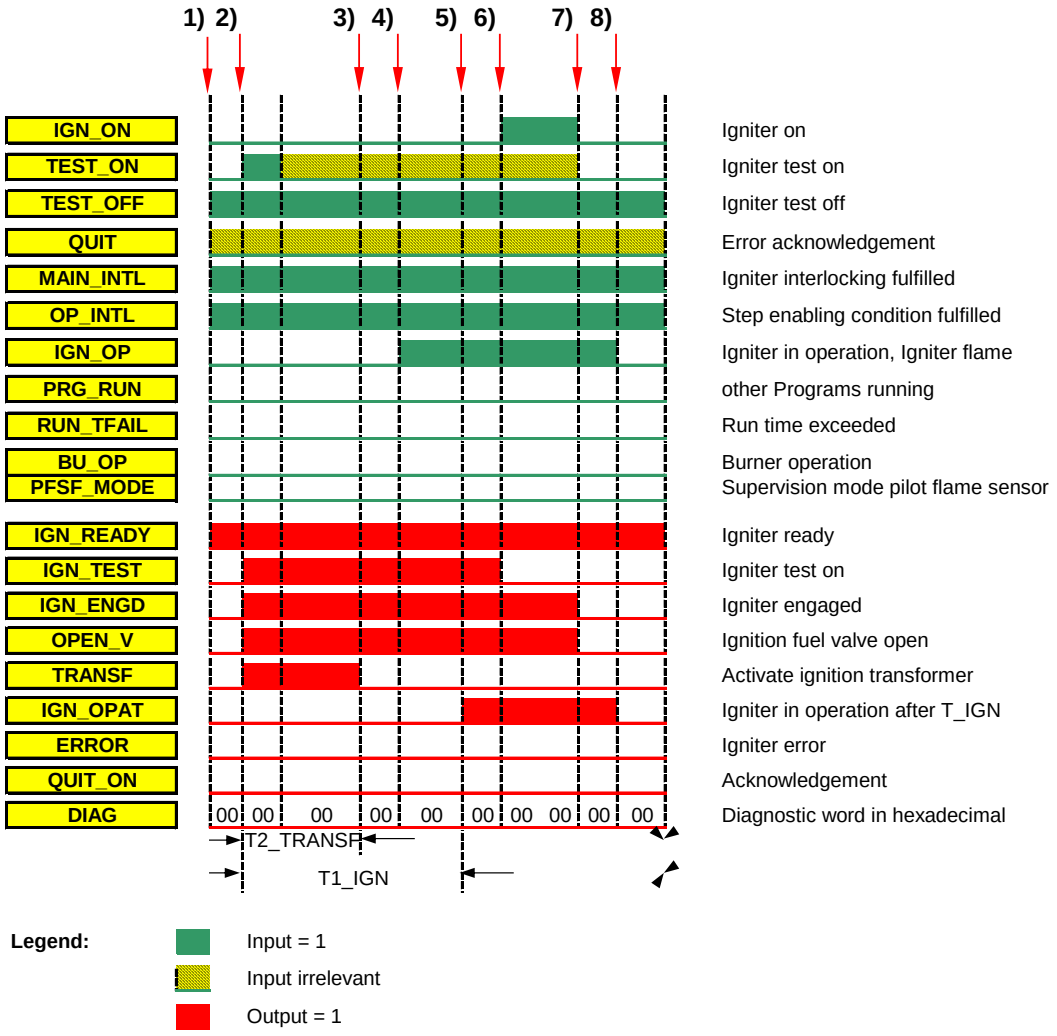

Copyright © Siemens AG 2015 All rights reserved

Description of the signal behavior during testing:

1) Main interlock and operation interlock fulfilled
   (OP_INTL=1, MAIN_INTL=1)
   Ignition function ready for operation (IGN_READY=1)
2) TEST_OFF set
   Start of ignition test with positive edge at input TEST_ON
   “Igniter controlled” message (IGN_ENGD=1)
   Ignition gas valves opened (OPEN_V=1)
   Ignition transformer controlled (TRANSF=1)
   Timer T1_IGN for ignition safety time starts,
   Timer T2_TRANSF for ignition transformer starts
3) T2_TRANSF has expired,
   Ignition transformer no longer controlled (TRANSF=0)
4) IGN_OP=1: flame detector reports ignition flame
5) After T1_IGN has expired, and IGN_OP pending, the “igniter successfully ignited” message (IGN_OPAT=1) is output
6) IGN_ON switches to normal operation mode (IGN_ON = 1)
   Ignition test mode terminated (IGN_TEST = 0)
7) Igniter function switched off (IGN_ON=0)
   Igniter function no longer controlled (IGN_ENGD=0)
   Ignition gas valves are closed (OPEN_V=0)
8) Ignition flame deleted (IGN_OP=0)
   Message at output IGN_OPAT reset

Copyright © Siemens AG 2015 All rights reserved

3.3.6 Status graph

Figure 3-11

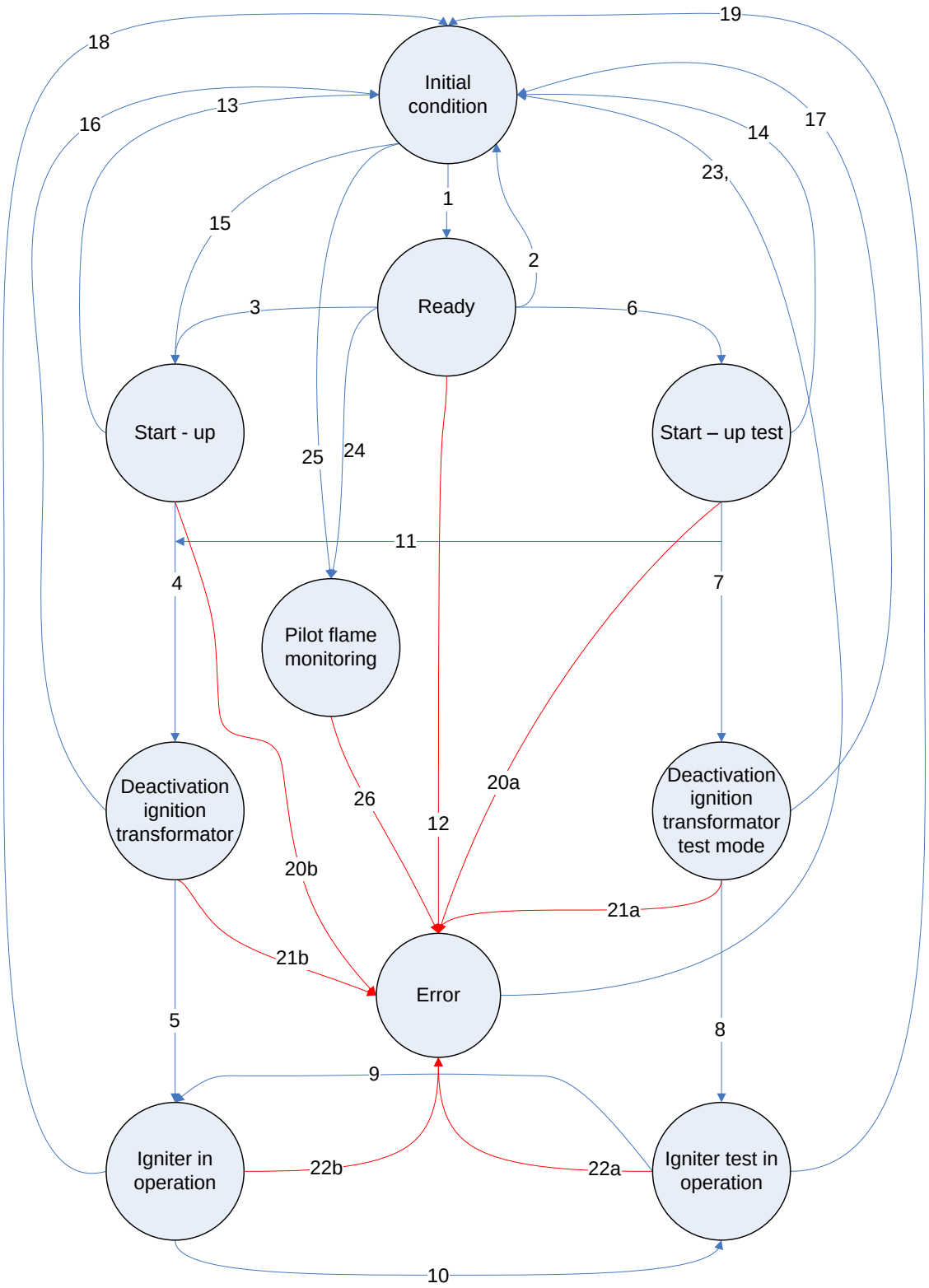

Copyright © Siemens AG 2015 All rights reserved

Explanation of the status graph

Table 3-11

Transition	Transition conditions
1	MAIN_INTL == 1
2	MAIN_INTL == 0
3	PRG_RUN == 0 **AND** ERROR == 0 **AND** RUN_T_FAIL == 0 **AND** DIAG 13 == 0 **AND** OP_INTL == 1 **AND** IGN_ON == 1
4	T2_TRANSF expired
5	IGN_OP := TRUE **AND** T1_IGN expired
6	PRG_RUN == 0 **AND** ERROR == 0 **AND** RUN_T_FAIL == 0 **AND** DIAG 13 == 0 **AND** OP_INTL == 1 **AND** TEST_ON == 1 **AND** TEST_OFF == 1 **AND** IGN_ON == 0
7	T2_TRANSF expired
8	IGN_OP == 1 **AND** T1_IGN expired
9, 11	IGN_ON == 1
10	IGN_ON == 0 **AND** AND TEST_ON == 1 **AND** AND TEST_OFF == 1
12	OP_INTL == 0 **AND** (IGN_ON == 1 **OR** (TEST_ON == 1 **AND** TEST_OFF == 1))
13	RUN_TFAIL == 1 **OR** IGN_ON == 0
14	RUN_TFAIL == 1 **OR** TEST_OFF == 0 **OR** BU_OP == 1
15	GN_ON == 1 **OR•** RUN_TFAIL == 0
	T1_IGN not restarted
16	RUN_TFAIL == 1 **OR** IGN_ON == 0
17	RUN_TFAIL == 1 **OR** BU_OP == 1 **OR** TEST_OFF == 0
18	RUN_TFAIL == 1 **OR** IGN_ON == 0
19	RUN_TFAIL == 1 **OR** BU_OP == 1 **OR** TEST_OFF == 0
20a, 20b	MAIN_INTL == 0 **OR** OP_INTL == 0
21a, 21b	MAIN_INTL == 0 **OR** OP_INTL == 0 **OR** T1_IGN expired
22a, 22b	MAIN_INTL == 0 **OR** OP_INTL == 0 **OR** IGN_OP == 0
23	QUIT == pos. edge

Copyright © Siemens AG 2015 All rights reserved

Transition	Transition conditions
24, 25	PFSF_MODE == 0 **AND** IGN_OP == 1 **and** (IGN_ON == 0 **OR** (TEST_ON == 0 **AND** TEST_OFF == 1))
26	T_PFS_FAIL expired

Table 3-12

State		Outputs which are switched
Initial state		No outputs switched
Ready		IGN_READY := TRUE
Startup		GN_ENGD := TRUE OPEN_V := TRUE IGN_TEST := FALSE Start T1_IGN and T2_TRANSF TRANSF := TRUE
Test startup		IGN_ENGD := TRUE OPEN_V := TRUE IGN_TEST := TRUE Start T1_IGN and T2_TRANSF TRANSF := TRUE
Ignition transformer shut-down		TRANSF := FALSE IGN_TEST := FALSE
Ignition transformer test operation shut-down		TRANSF := FALSE IGN_TEST := TRUE
Igniter operation		T1_IGN expired IGN_OPAT := TRUE IGN_TEST := FALSE
Igniter test mode		T1_IGN expired IGN_OPAT := TRUE IGN_TEST := TRUE
Ignition flame monitoring		T_PFS_FAIL starts
Error	out of 12, 20a, 20b, 21a, 21b, 22a, 22b	ERROR := TRUE IGN_READY := FALSE IGN_ENGD := FALSE OPEN_V := FALSE TRANSF := FALSE IGN_TEST := FALSE
	out of 26	
Faulty flame detector		DIAG 13 := TRUE

Copyright © Siemens AG 2015 All rights reserved

3.4 Function for controlling the functions of an oil burner (F_OIL_BU)

3.4.1 Introduction

The failsafe function F_OIL_BU initiates starting an oil burner by controlling the ignition function. After successfully igniting the igniter, this function opens the safety shut-off valves of the burner as well as the atomizer valves and checks whether an ignition has occurred within a defined time.

These functionalities are realized by the function in single-burner and multi-burner mode.

Figure 3-12

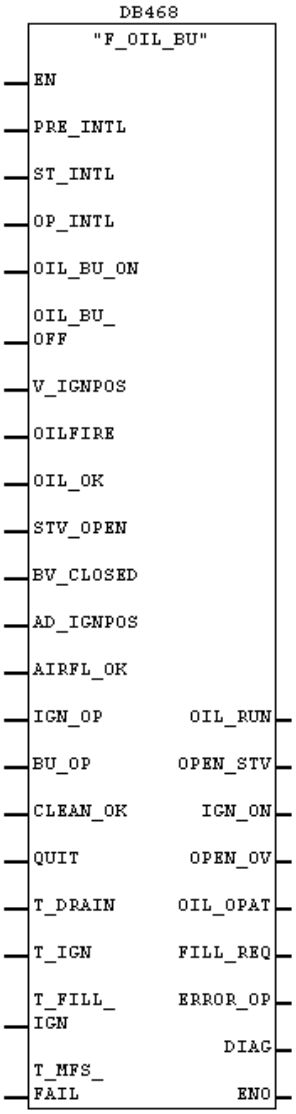

Note When using this function, the function blocks F_TON (FB 185) and F_BO_W (FC176) must exist in the block folder.

Copyright © Siemens AG 2015 All rights reserved

3.4.2 Connections

All data type BOOL inputs, except for OP_INTL, have a default 0-signal.
All data type TIME inputs have T#0ms pre-assigned.

Table 3-13

Name	Data type	Description
Inputs		
PRE_INTL	BOOL	**Switch on interlock** • If a 1-signal is active at this input, the oil burner function is ready for operation. After the burner has been started via OIL_BU_ON, this input is no longer evaluated
ST_INTL	BOOL	**Start-up interlock** • If a 1-signal is active at this input, the oil burner function can be started. This input is only evaluated during the startup process (starting with OIL_BU_ON=1 to OIL_OPAT=1)
OP_INTL	BOOL	**Operation interlock** • If a 1-signal is active at this input, the oil burner function can be operated. This input is only evaluated after the function is in operation (OIL_OPAT=1)
OIL_BU_ON	BOOL	**“Switch on oil burner” command** A positive edge starts the burner function.
OIL_BU_OFF	BOOL	**“Switch off oil burner” command** A positive edge terminates the operation of the burner
V_IGNPOS	BOOL	**Oil control valve in ignition position** • 1-signal: oil control valve in ignition position. • 0-signal: oil control valve is not in ignition position.
OILFIRE	BOOL	**Flame detected** • 1-signal: flame detected • 0-signal: no flame exists. If a flame has already been detected prior to the startup and other burners are in operation, it is assumed, that other burners are ignited and therefore an ignition position needs not be approached for the fuel valves and air dampers.
OIL_OK	BOOL	**Oil criteria fulfilled** • 1-signal: oil criteria fulfilled. • 0-signal: oil criteria not fulfilled. Oil criteria are all fuel-related conditions necessary for a safe operation
AD_IGNPOS	BOOL	**Air damper in ignition position** • 1-signal: air damper in ignition position • 0-signal: air damper not in ignition position

Copyright © Siemens AG 2015 All rights reserved

Name	Data type	Description
AIRFL_OK	BOOL	**Joint air flow criteria fulfilled** • 1-signal: air criteria fulfilled • 0-signal: air criteria not fulfilled Air criteria are all combustion air related conditions necessary for a safe operation.
IGN_OP	BOOL	**Igniter in operation** • 1-signal: igniter successfully ignited • 0-signal: igniter did not ignite
BU_OP	BOOL	**Burner in operation** • 1-signal: other burners in operation • 0-signal: other burners not in operation If other burners are already in operation and a flame detected prior to startup, it is assumed that other burners are ignited and therefore an ignition position needs not be approached for fuel valves and air dampers.
QUIT	BOOL	**Error acknowledgement** Error acknowledgements are reset with this input parameter, the acknowledgement occurs at positive edge
STV_OPEN	BOOL	**Atomization valve opened** • 1-signal: atomizer valve opened • 0-signal: atomizer valve closed
BV_CLOSED	BOOL	**Cleaning valve closed** • 1-signal: cleaning valve closed • 0-signal: cleaning valve opened
CLEAN_OK	BOOL	**Cleaning program terminated** • 1-signal: burner was cleaned prior to startup • 0-signal: no time for filling the oil lance needs to be taken into account
T_DRAIN	TIME	**Atomizer vapor drainage** Time in which the cleaned parts can be drained. Subsequently, ignition is initialized. (Time between opening the atomizer valve and controlling the ignition function) • Guide value: 0min < T_DRAIN < 2min
T_IGN	TIME	**Gas burner safety time** Within this time, the burner must have ignited successfully. • Guide value: 0min < T_IGN < 1min
T_FILL_IGN	TIME	**Oil burner safety time and filling time** Within this time, the burner must have ignited successfully. Apart from the actual safety time, this time also contains the time required for filling the oil lance • Guide value: 0min < T_FILL_IGN < 2min
T_MFS_FAIL	TIME	**Monitoring time for flame detector** If an ignition flame is reported for longer than time T_MFS_FAIL (OILFIRE=1), even though the oil burner function is not in operation (OIL_OPAT=0), an error is detected.

Copyright © Siemens AG 2015 All rights reserved

Name	Data type	Description
Outputs		
OIL_RUN	BOOL	**Oil startup program running** • 1-signal: oil startup program in operation • 0-signal: oil startup program not started or start conditions not fulfilled
OPEN_STV	BOOL	**Open the atomizer valve** • 1-signal: oil atomizer valve is controlled • 0-signal: oil atomizer valve is or remains closed
IGN_ON	BOOL	**Switch on the igniter** • 1-signal: the ignition function is controlled • 0-signal: the ignition function is not controlled
OPEN_V	BOOL	**Controlling the safety shut-off valves** • 1-signal: safety shut-off valves are opened • 0-signal: safety shut-off valves are closed or remain closed
OIL_OPAT	BOOL	**Oil burner in operation after T_IGN** • 1-signal: burner was ignited within the safety time • 0-signal: burner not in operation
FILL_REQ	BOOL	**Oil lance blow out** • 1-signal: oil lance cleaned • 0-signal: oil lance not cleaned
ERROR_OP	BOOL	**Cancelled operation** • 1-signal: one or several errors exist, which have occurred during operation • 0-signal: no errors exist.
DIAG	WORD	**Diagnostic word** Information on block status and errors is output at this output

Copyright © Siemens AG 2015 All rights reserved

NOTICE	**Please note that the configured safety times must comply with the corresponding standards.**

3.4.3 Diagnosis F_OIL_BU

Table 3-14

Bit No.	Description	Reset condition
0	Start command triggered while pre-interlocking has not been set (OIL_BU_ON=1 and PRE_INTL=0)	• PRE_INTL=1 • positive edge at QUIT
1	Start command triggered while startup-interlocking has not been set (OIL_BU_ON=1 and ST_INTL=0	• ST_INTL=1 • positive edge at QUIT
2	Start command triggered while stop command exists (OIL_BU_ON=1 and OIL_BU_OFF=1)	• BU_OFF=0 • positive edge at QUIT

Bit No.	Description	Reset condition
3	Start command triggered while unacknowledged error exists (OIL_BU_ON=1 and ERROR_OP=1	• positive edge at QUIT
4	The fuel control valve is not in ignition position while the oil startup program is running or started (OIL_BU_ON=1 and V_IGNPOS=0)	• Switching over to multi-burner mode (BU_OP=1 and OILFIRE=1) • positive edge at QUIT • new start command (OIL_BU_ON=1)
5	The air damper is not in ignition position while the gas startup program is running or started (OIL_BU_ON=1 and AD_IGNPOS=0)	• Switching over to multi-burner mode (BU_OP=1 and OILFIRE=1) • positive edge at QUIT • new start command (OIL_BU_ON=1)
6	Flame detector does not detect a flame within the safety time (OILFIRE=0 after T_IGN or T_FILL_IGN has expired)	• positive edge at QUIT • new start command (OIL_BU_ON=1)
7	Air criteria not fulfilled (AIRFL_OK=0)	• positive edge at QUIT • new start command (OIL_BU_ON=1)
8	Oil conditions not fulfilled (OIL_OK=0)	• positive edge at QUIT • new start command (OIL_BU_ON=1)
9	Atomizer valve not yet opened. (OPEN_STV=1 and STV_OPEN=0)	• STV_OPEN=1 • positive edge at QUIT • new start command (OIL_BU_ON=1)
10	Cleaning valve opened during ignition of the burner (IGN_ON=1 and IGN_OP=1 and BV_CLOSED=0)	• BV_CLOSED=1 • positive edge at QUIT • new start command (OIL_BU_ON=1)
11	Igniter is controlled but not yet in operation (IGN_OP=0 and IGN_ON=1)	• IGN_OP=1 • positive edge at QUIT • new start command (OIL_BU_ON=1)
12	Operation interlocks have failed (OP_INTL=0)	• positive edge at QUIT • new start command (OIL_BU_ON=1)
13	Flame detector reports flame even though no burner is in operation (OILFIRE=1 and BU_OP=0)	• positive edge at QUIT
14	Burner was not ignited within the safety time (OILFIRE=0 after T_IGN or T_FILL_IGN has expired)	• positive edge at QUIT • new start command (GAS_BU_ON=1)
15	Reserve	

Copyright © Siemens AG 2015 All rights reserved

3.4.4 Mode of operation

The F_OIL_BU function is started by a positive edge at the OIL_BU_ON input. However, the conditions of the switch-on interlock (PRE_INTL=1) and the startup-interlock (ST_INTL) must be fulfilled.

If the burner is in single operation mode, it cannot be started while the main flame detector reports a flame (OILFIRE=1). In multi-burner mode (BU_OP=1), the oil startup program starts even if a flame has been detected.

If the burner is in single operation mode, the fuel control valves and the air dampers need to be in ignition position (V_IGNPOS and AD_IGNPOS=1).

In both cases, the air and oil criteria (e.g. oil pressure valid) must be fulfilled (AIRFL_OK=1 and OIL_OK=1) for controlling the ignition function.

If all these conditions apply, output OPEN_STV (controlling the atomizer valve) and output OIL_RUN are set to "1". If the atomizer valve is opened, a positive signal is pending at input STV_OPEN an timer T_DRAIN (time for draining the atomizer vapor) starts.

After the configured time has expired, the ignition function (output IGN_ON=1) is controlled.
If during the ignition process one or several conditions OIL_OK or AIRFL_OK (in single-burner mode additionally AD_IGNPOS and V_IGNPOS, in multi-burner mode OILFIRE and BU_OP) are no longer fulfilled and then become active again, a new start command must first be sent to OIL_BU_ON before OIL_RUN has a 1-signal again.

Upon the expiry of safety time T_IGN at the latest, a flame needs to be detected via the OILFIRE input. Furthermore, a 1-signal must then be pending at the OP_INTL (operation interlock) input at the latest. A successful ignition of the burner is signaled via the OIL_OPAT output.

The operation of the burner can be stopped at any time with a positive edge at the OIL_BU_OFF input.

If the burner has been cleaned (input CLEAN_OK=1), T_FILL_IGN is used as the safety time. Apart from the actual safety time, T_FILL_IGN (as opposed to T_IGN) also contains the time required for filling the oil lance.

During operation, the operation locks, air conditions and oil conditions must be fulfilled and the flame exist. (i.e. a 1-signal must be active at inputs OP_INTL, AIRFL_OK, OIL_OK and OILFIRE)

A failure shutdown is performed if a 0-signal is active at the input of the operation interlock (OP_INTL), of the gas conditions (OIL_OK), the air conditions (AIRFL_OK) or at the input of the main flame (OILFIRE). If this is the case, the ERROR_OP output will be set. It must be reset with a positive edge at input QUIT prior to the next start.

Using block F_OIL_BU, the signal from the main flame detector is also checked for plausibility. If the burner is switched off, the "OILFIRE" signal must also be reset within the configured time: "T_MFS_FAIL" ("Main Flame Sensor Failure Time"). If this is does not happen, diagnostic bit 13 is set.

Copyright © Siemens AG 2015 All rights reserved

3.4.5 Time diagrams

Signal behavior

The picture below shows the optimal signal behavior of function F_IGNTR.

Figure 3-13

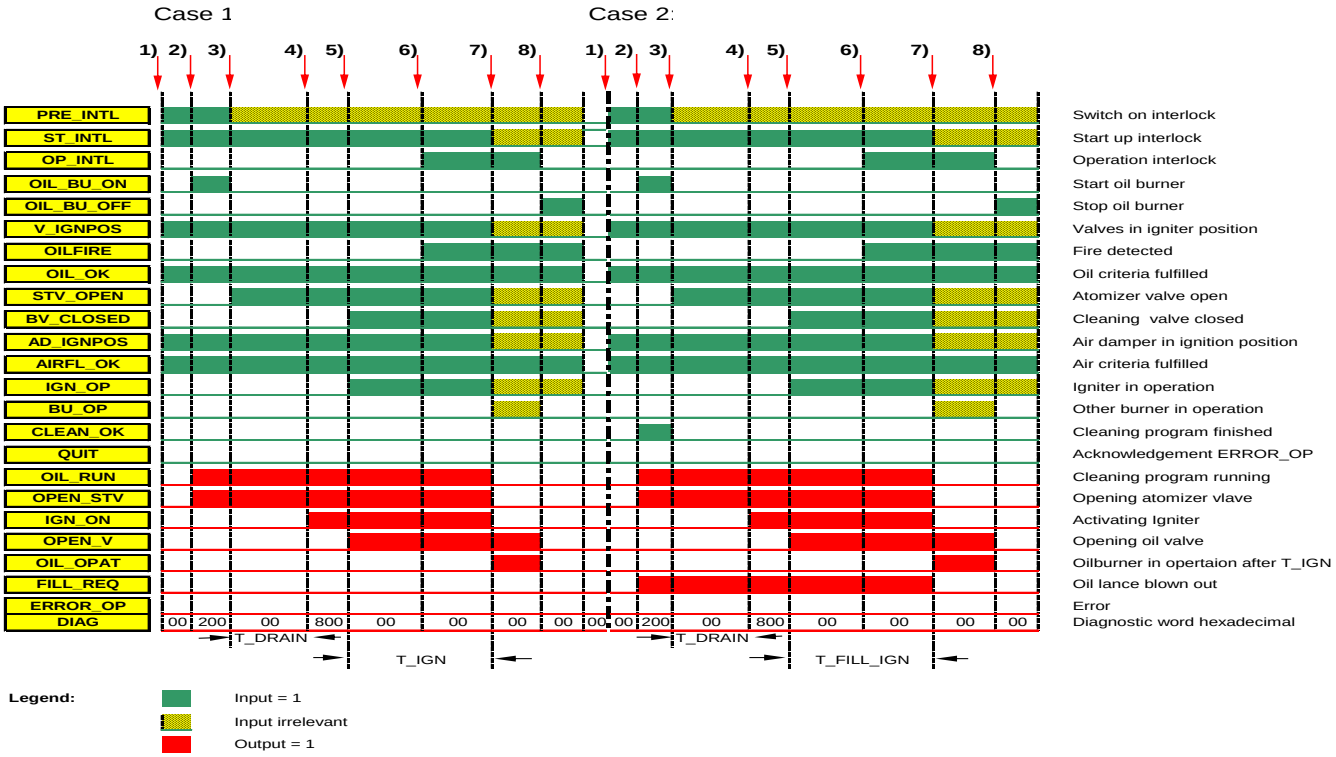

Description of the signal behavior:

Case 1: no filling time is needed for the oil lance

1) Interlocking fulfilled (PRE_INTL=1)
   Startup interlocking fulfilled (ST_INTL=1)
   Fuel control valves in ignition position (V_IGNPOS=1)
   Air dampers in ignition position (AD_IGNPOS=1)
   Oil criteria fulfilled (OIL_OK=1)
   Air criteria fulfilled (AIRFL_OK=1)
2) Starting the burner with positive edge at input OIL_BU_ON
   Oil startup program running (OIL_RUN = 1)
   Atomizer valve opened (OPEN_STV=1)
3) Atomizer valve is open (STV_OPEN=1)
   Timer T_DRAIN for drainage starts
4) After the timer has expired, the igniter is controlled (IGN_ON=1).
5) Igniter in operation (IGN_OP=1)
   Cleaning valve is closed (BV_CLOSED=1)
   Safety shut-off valves are opened (OPEN_V=1)
   Safety time T_IGN is started

Copyright © Siemens AG 2015 All rights reserved

6) Within the safety time, all operation conditions are fulfilled (OP_INTL=1)
   Flame is detected (OILFIRE=1)
7) Burner successfully ignited (OIL_OPAT=1)
8) Cancellation by stop command at input OIL_BU_OFF

Case 2: oil lance must be filled

1) Interlocking fulfilled (PRE_INTL=1)
   Startup interlocking fulfilled (ST_INTL=1)
   Fuel control valves in ignition position (V_IGNPOS=1)
   Air dampers in ignition position (AD_IGNPOS=1)
   Oil criteria fulfilled (OIL_OK=1)
   Air criteria fulfilled (AIRFL_OK=1)
2) Starting the burner with positive edge at input OIL_BU_ON
   Oil startup program running (OIL_RUN = 1)
   Atomizer valve opened (OPEN_STV=1)
   Burner cleaned prior to startup (CLEAN_OK=1)
   Output "oil lance blow out" is set (FILL_REQ=1)
3) Atomizer valve is open (STV_OPEN=1)
   Timer T_DRAIN for drainage starts
4) After the timer has expired, the igniter is controlled (IGN_ON=1).
5) Igniter in operation (IGN_OP=1)
   Cleaning valve is closed (BV_CLOSED=1)
   Safety shut-off valves are opened (OPEN_V=1)
   Safety time T_FILL_IGN is started
6) Within the safety time, all operation conditions are fulfilled (OP_INTL=1)
   Flame is detected (OILFIRE=1)
7) Burner successfully ignited (OIL_OPAT=1)
   FILL_REQ reset
8) Cancellation by stop command at input OIL_BU_OFF

Copyright © Siemens AG 2015 All rights reserved

Signal behavior in multi-burner mode

If several burners are operated in a combustion chamber, the first burner is ignited by means of the preceding time diagram.
“Flame detected” exists for all further burners (OILFIRE=1). Inputs V_IGNPOS and AD_IGNPOS need not be pending for these burners.

Figure 3-14

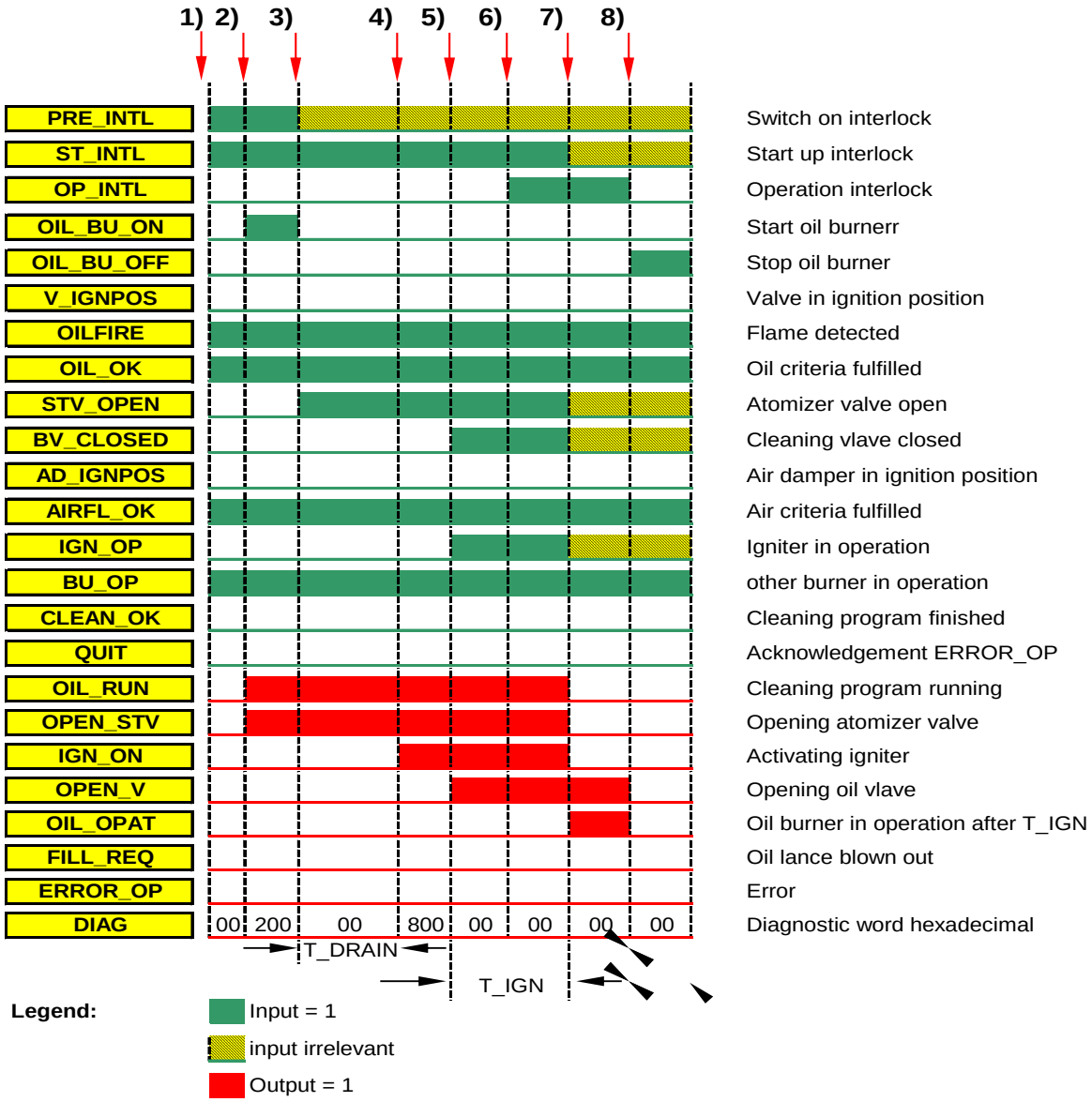

Copyright © Siemens AG 2015 All rights reserved

Description of the optimal signal behavior in multi-burner mode:

1) Interlocking fulfilled (PRE_INTL=1)
   Startup interlocking fulfilled (ST_INTL=1)
   Flame was detected (OILFIRE=1)
   Gas criteria fulfilled (OIL_OK=1)
   Air criteria fulfilled (AIRFL_OK=1)
   Other burners are in operation (BU_OP=1)
2) Starting the burner with positive edge at input OIL_BU_ON
   Oil startup program running (OIL_RUN = 1)
   Atomizer valve opened (OPEN_STV=1)
3) Atomizer valve is open (STV_OPEN=1)
   Timer T_DRAIN for drainage starts
4) After the timer has expired, the igniter is controlled (IGN_ON=1).
5) Igniter in operation (IGN_OP=1)
   Cleaning valve is closed (BV_CLOSED=1)
   Safety shut-off valves are opened (OPEN_V=1)
   Safety time T_IGN is started
6) Within the safety time, all operation conditions are fulfilled (OP_INTL=1)
   Flame is detected (OILFIRE=1)
7) Burner successfully ignited (OIL_OPAT=1)
8) Cancellation by stop command at input OIL_BU_OFF

Copyright © Siemens AG 2015 All rights reserved

3.4.6 Status graph

Figure 3-15

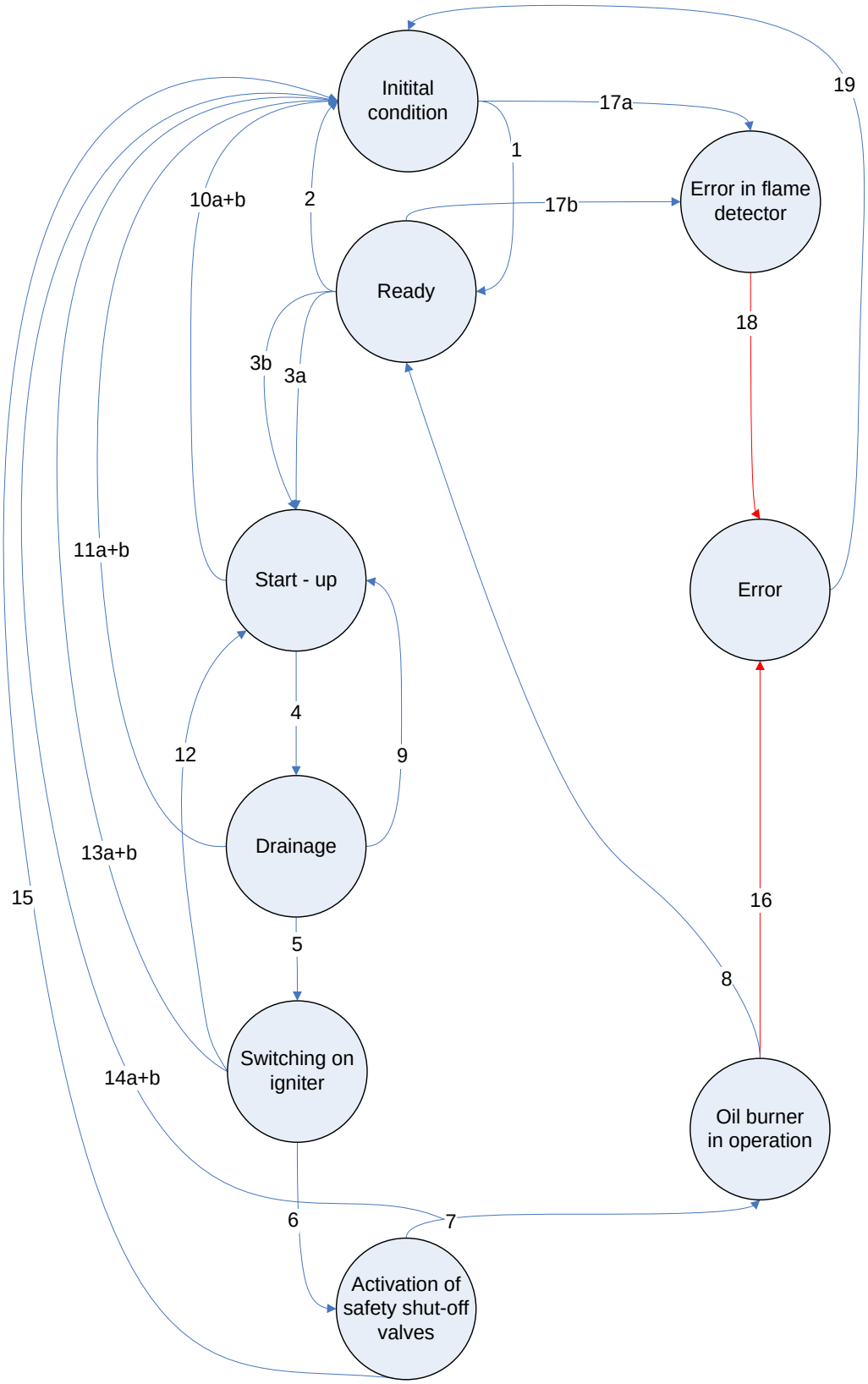

Copyright © Siemens AG 2015 All rights reserved

Explanation of the status graph

Table 3-15

Transition	Transition conditions
1	PRE_INTL == 1
2	PRE_INTL == 0
3a	Single-burner operation mode: OIL_BU_ON == pos. edge **AND** ST_INTL == 1 **AND** OIL_BU_OFF == 0 **AND** ERROR_OP == 0 **AND** OIL_OK ==1 **AND** AIRFL_OK == 1 **AND** V_IGNPOS == 1 **AND** AD_IGNPOS == 1
3b	Multi-burner operation mode: OIL_BU_ON == pos. edge **AND** ST_INTL == 1 **AND** OIL_BU_OFF == 0 **AND** ERROR_OP == 0 **AND** (OIL_OK ==1 **AND** AIRFL_OK == 1 **AND** OILFIRE ==1 **AND** BU_OP ==1
4	STV_OPEN == 1
5	Timer T_DRAIN expired
6	IGN_OP == 1 **AND** BV_CLOSED == 1
7	(OILFIRE == 1 **AND** OP_INTL == 1 within safety time T_IGN) **OR** (OILFIRE == 1 **AND** OP_INTL == 1 within safety time + filling time (T_FILL_IGN) **AND** CLEAN_OK == 1)
8	OIL_BU_OFF == 1
9	STV_OPEN == 0
10a, 11a 13a	Single-burner operation mode: OIL_BU_OFF == 1 **OR** OIL_OK == 0 **OR** AIRFL_OK == 0 **OR** ST_INTL == 0 **OR** V_IGNPOS == 0 **OR** AD_IGNPOS == 0
10b, 11b, 13b	Multi-burner operation mode: OIL_BU_OFF == 1 **OR** OIL_OK == 0 **OR** AIRFL_OK == 0 **OR** ST_INTL == 0 **OR** (OILFIRE ==0 **AND** BU_OP ==1) **OR** (OILFIRE ==1 **AND** BU_OP ==0)
12	STV_OPEN == 0

Copyright © Siemens AG 2015 All rights reserved

Transition	Transition conditions
14a	Single-burner operation mode: OIL_BU_OFF == 1 **OR** OIL_OK == 0 **OR** AIRFL_OK == 0 **OR** ST_INTL == 0 **OR** STV_OPEN == 0 **OR** BV_CLOSED == 0 **OR** IGN_OP == 0 **OR** V_IGNPOS == 0 **OR** AD_IGNPOS == 0
14b	Multi-burner operation mode: OIL_BU_OFF == 1 **OR** OIL_OK == 0 **OR** AIRFL_OK == 0 **OR** ST_INTL == 0 **OR** STV_OPEN == 0 **OR** BV_CLOSED == 0 **OR** IGN_OP == 0 **OR** (OILFIRE ==0 **AND** BU_OP ==1) **OR** (OILFIRE ==1 **AND** BU_OP ==0)
15	(Safety time T_IGN expired **AND** (OP_INTL == 0 **OR** OILFIRE == 0)) **OR** (Safety time T_IGN filling time (T_FILL_IGN) expired **AND** (OP_INTL == 0 **OR** OILFIRE == 0))
16	OIL_OK == 0 **OR** AIRFL_OK == 0 **OR** OILFIRE == 0 **OR** OP_INTL == 0
17a, 17b	OIL_RUN := FALSE **AND** BU_OP := FALSE **AND** OIL_OPAT := FALSE **AND** OILFRE := TRUE **AND**
18	Monitoring time T_MFS_FAIL expired
19	QUIT == pos. edge **AND** OILFIRE == 0

Copyright © Siemens AG 2015 All rights reserved

Table 3-16

State		Outputs which are switched
Initial state		No outputs switched
Ready		No outputs switched
Startup		OIL_RUN := TRUE OPEN_STV := TRUE
Drainage		Timer T_DRAIN starts
Switch on the ignition function		IGN_ON := TRUE
Controlling the safety shut-off valves		OPEN_V := TRUE
Oil burner in operation		OIL_OPAT := TRUE OIL_RUN := FALSE STV_OPEN := FALSE IGN_ON := FALSE
Faulty flame detector		Timer T_MFS_FAIL starts
Error	out of 16	ERROR_OP := TRUE AND OPEN_V := FALSE AND OIL_OPAT := FALSE
	out of 18	DIAG 13 := TRUE

Copyright © Siemens AG 2015 All rights reserved

3.5 Function for cleaning the oil burner (F_OIL_CLEAN)

3.5.1 Introduction

The failsafe function F_OIL_CLEAN initiates and monitors the cleaning program for the oil burner. It controls the ignition function and the cleaning valve and monitors the time required for blowing out the oil lance

This function can be used for cleaning the oil burner prior to startup or after operation. The function was previously named F_OIL_ST.

Figure 3-16

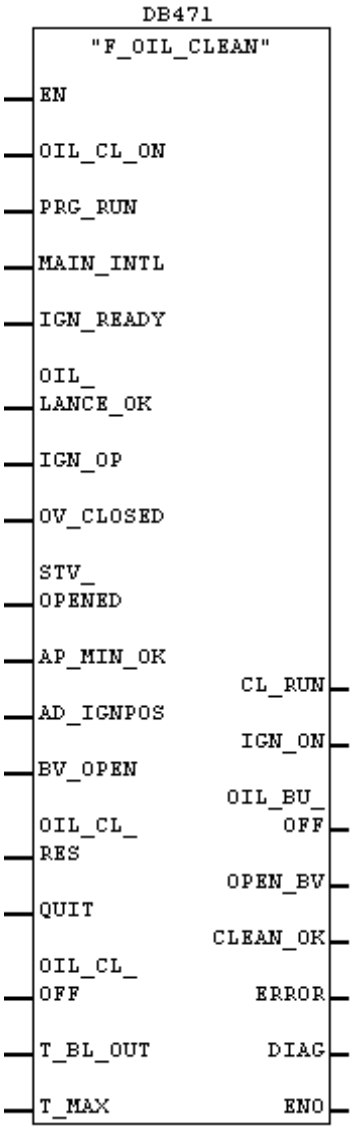

Note When using this function, the function blocks F_TON (FB 185) and F_BO_W (FC176) must exist in the block folder.

Copyright © Siemens AG 2015 All rights reserved

3.5.2 Connections

All data type BOOL inputs have a default 0-signal.
All data type TIME inputs have T#0ms pre-assigned.

Table 3-17

Name	Data type	Description
Inputs		
OIL_CL_ON	BOOL	**Cleaning program on command** A positive edge starts the cleaning function
PRG_RUN	BOOL	**Other programs are running** As long as a 1-signal is pending here, other functions are in operation, which prevent the ignition test from being switched on
MAIN_INTL	BOOL	**Main interlock for cleaning program** • 1-signal: required operating conditions are fulfilled • 0-signal: required operating conditions are not fulfilled
IGN_READY	BOOL	**Step enabling conditions** • 1-signal: ignition function is ready for operation. • 0-signal: ignition function is not ready for operation.
OIL_LANCE_ OK	BOOL	**Oil lance retracted** • 1-signal: oil lance retracted • 0-signal: oil lance not retracted
IGN_OP	BOOL	**Igniter in operation** • 1-signal: igniter in operation • 0-signal: igniter not in operation
OV_CLOSED	BOOL	**Safety shut-off valves closed** • 1-signal: safety shut-off valves closed • 0-signal: safety shut-off valves not closed
STV_OPENED	BOOL	**Atomizer valve open** • 1-signal: Atomizer valve open • 0-signal: Atomization valve not open
AP_MIN_OK	BOOL	**Atomizer pressure > MIN** • 1-signal: atomizer pressure above minimal limit • 0-signal: atomizer pressure not above minimal limit
AD_IGNPOS	BOOL	**Air damper in ignition position** • 1-signal: air damper in ignition position • 0-signal: air damper not in ignition position
BV_OPEN	BOOL	**Cleaning valve opened** • 1-signal: cleaning valve opened • 0-signal: cleaning valve not open
OIL_CL_RES	BOOL	**Reset the cleaning program** 1-signal: Reset CLEAN_OK
QUIT	BOOL	**Error acknowledgement** Error messages are reset with this input parameter. The acknowledgement is only given at positive edge.

Copyright © Siemens AG 2015 All rights reserved

Name	Data type	Description
OIL_CL_OFF	BOOL	**Switch off cleaning program** A positive edge terminates the operation of the cleaning program
T_BL_OUT	TIME	**Cleaning time** The time describes how long the cleaning valve shall be opened. • Guide value: 0min < T_BL_OUT < 40min
T_MAX	TIME	**Runtime for cleaning program** Maximal permitted runtime for the cleaning program. • Guide value: 0min < T_MAX < 60min
Outputs		
CL_RUN	BOOL	**Cleaning program running** • 1-signal: cleaning program running • 0-signal: cleaning program not running
IGN_ON	BOOL	**Controlling the ignition function** • 1-signal: controlling the ignition function • 0-signal: ignition function not controlled
OIL_BU_OFF	BOOL	**Switch off oil burner** • 1-signal: oil burner switched off • 0-signal: oil burner not switched off
OPEN_BV	BOOL	**Controlling cleaning valve OPEN** • 1-signal: open the cleaning valve • 0-signal: do not open the cleaning valve
CLEAN_OK	BOOL	**Cleaning program terminated** • 1-signal: cleaning program terminated successfully • 0-signal: cleaning program not terminated
ERROR	BOOL	**Failure in the cleaning program** • 1-signal: one or several errors exist • 0-signal: no errors exist
DIAG	WORD	**Diagnostic word** Information on function status and errors is output at this output

NOTICE	**Please note that the configured safety times must comply with the corresponding standards.**

3.5.3 Diagnosis F_OIL_BU

Table 3-18

Bit No.	Description	Reset condition
0	Start command triggered while other programs are running (OIL_CL_ON=1 and PRG_RUN=1	PRG_RUN=0 positive edge at QUIT
1	Reserve	
2	Start command triggered while stop command exists (OIL_CL_ON=1 and OIL_CL_OFF=1)	OIL_CL_OFF=0 positive edge at QUIT

Copyright © Siemens AG 2015 All rights reserved

Bit No.	Description	Reset condition
3	Start command triggered because unacknowledged error exists (OIL_CL_ON=1 and ERROR=1)	positive edge at QUIT
4	Ignition function is not ready for operation (IGN_READY=0).	IGN_READY=1 positive edge at QUIT new start command (OIL_CL_ON=1)
5	Air damper not in ignition position (AD_IGNPOS=0)	AD_IGNPOS=1 positive edge at QUIT new start command (OIL_CL_ON=1)
6	Atomizer valve is closed (STV_OPENED=0)	STV_OPENED=1 positive edge at QUIT new start command (OIL_CL_ON=1)
7	Air pressure is smaller than minimal pressure (AP_MIN_OK=0)	AP_MIN_OK=1 positive edge at QUIT new start command (OIL_CL_ON=1)
8	Oil lance not retracted (OIL_LANCE_OK=0)	OIL_LANCE_OK=1 positive edge at QUIT new start command (OIL_CL_ON=1)
9	Cleaning valve is controlled but not yet in closed (OPEN_BV=1 and BV_OPEN=0)	BV_OPEN=1 positive edge at QUIT new start command (OIL_CL_ON=1)
10	Oil burner switched off, but safety shut-off valves still open (OIL_BU_OFF=1 and OV_CLOSED=0)	OV_CLOSED=1 positive edge at QUIT new start command (OIL_CL_ON=1)
11	Igniter is controlled but not yet in operation (IGN_OP=0 and IGN_ON=1)	IGN_OP=1 positive edge at QUIT new start command (OIL_CL_ON=1)
12	Operation interlock not fulfilled (MAIN_INTL=0)	positive edge at QUIT new start command (OIL_CL_ON=1)
13	An error occurs during the cleaning program.	positive edge at OLPR_RS
14	Monitoring time of the cleaning program exceeded	positive edge at QUIT
15	Reserve	

Copyright © Siemens AG 2015 All rights reserved

3.5.4 Mode of operation

Cleaning program F_OIL_CLEAN is started by means of input OIL_CLEAN_ON. Operation interlock (MAIN_INTL=1) must be fulfilled here and no other program must be in operation (PRG_RUN=0).

Starting up the cleaning program is signaled via output "Startup program running" (CL_RUN).

After starting the startup program (for single-burner control) the ready message of the ignition function is waited for (IGN_READY=1). Furthermore, the oil lance must have retracted (OIL_LANCE_OK=1).

If this was the case, the ignition function is controlled with the IGN_ON command.

After the igniter has ignited successfully (IGN_OP=1), a possible operated oil burner is stopped with the OIL_BU_OFF command.

If the safety shut-off valves are closed (OV_CLOSED=1), the atomizer valve open (STV_OPENED=1), the atomizer pressure above the minimal limit (AP_MIN_OK=1), and the air damper in ignition position (AD_IGNPOS=1), the cleaning valve will be opened (OPEN_BV=1).

The cleaning time T_BL_OUT starts with the cleaning valve open feedback (BV_OPEN=1).

After the cleaning time has expired, the cleaning program terminated message (CLEAN_OK) appears.

Timer T_MAX monitors the entire cleaning program. When exceeding the configured runtime, the program is cancelled and an error bit is set.

Copyright © Siemens AG 2015 All rights reserved

3.5.5 Timing diagram

The picture below shows the signal behavior of function F_OIL_CLEAN.

Figure 3-17

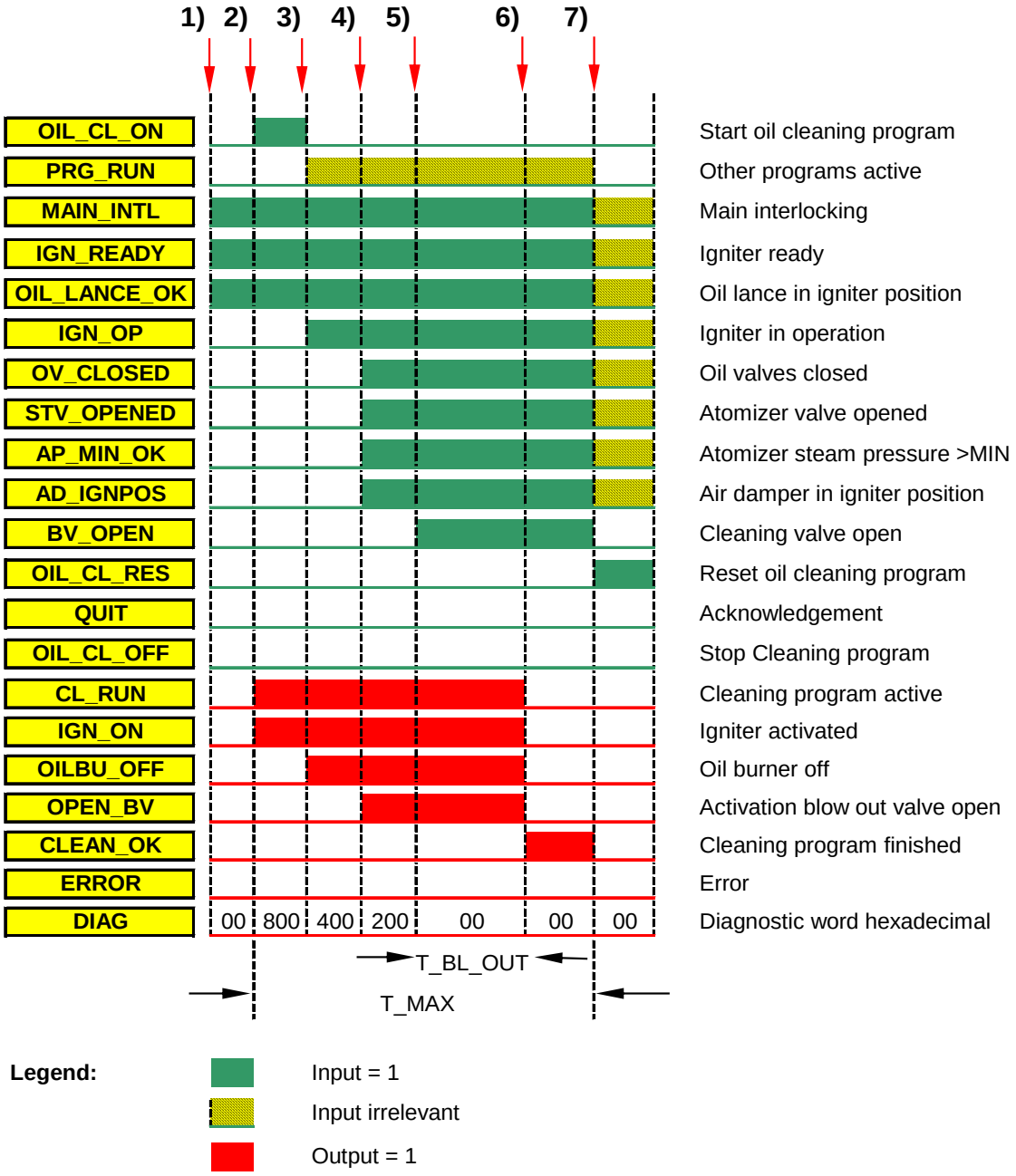

Legend:

- Input = 1
- Input irrelevant
- Output = 1

Copyright © Siemens AG 2015 All rights reserved

Description of the signal behavior:

1) Main interlock fulfilled (MAIN_INTL=1)
   Igniter ready (IGN_READY=1)
   Oil lance retracted (OIL_LANCE_OK=1)
   No other programs running (PRG_RUN=0)
2) Starting the cleaning program with a positive edge at input OIL_CL_ON
   Cleaning program running (output CL_RUN=1)
   Ignition function is controlled (IGN_ON=1)
   Runtime monitoring is started
3) Igniter in operation (IGN_OP=1)
   Oil burner switched off (OIL_BU_OFF=1)
4) Safety shut-off valves closed (OV_CLOSED=1)
   Atomizer valve opened (STV_OPENED=1)
   Atomizer pressure > MIN (AP_MIN_OK=1)
   Air damper in ignition position (AD_IGNPOS=1)
   Cleaning valve is opened (OPEN_BV=1).
5) Cleaning valve is open (BV_OPEN=1)
   Cleaning time is started (T_BL_OUT)
6) Cleaning time has expired
   Cleaning program was terminated (CLEAN_OK=1)
   Cleaning program was completed before T_MAX has expired
7) Reset by means of positive edge at input OLPR_RS

Copyright © Siemens AG 2015 All rights reserved

3.5.6 Status graph

Figure 3-18

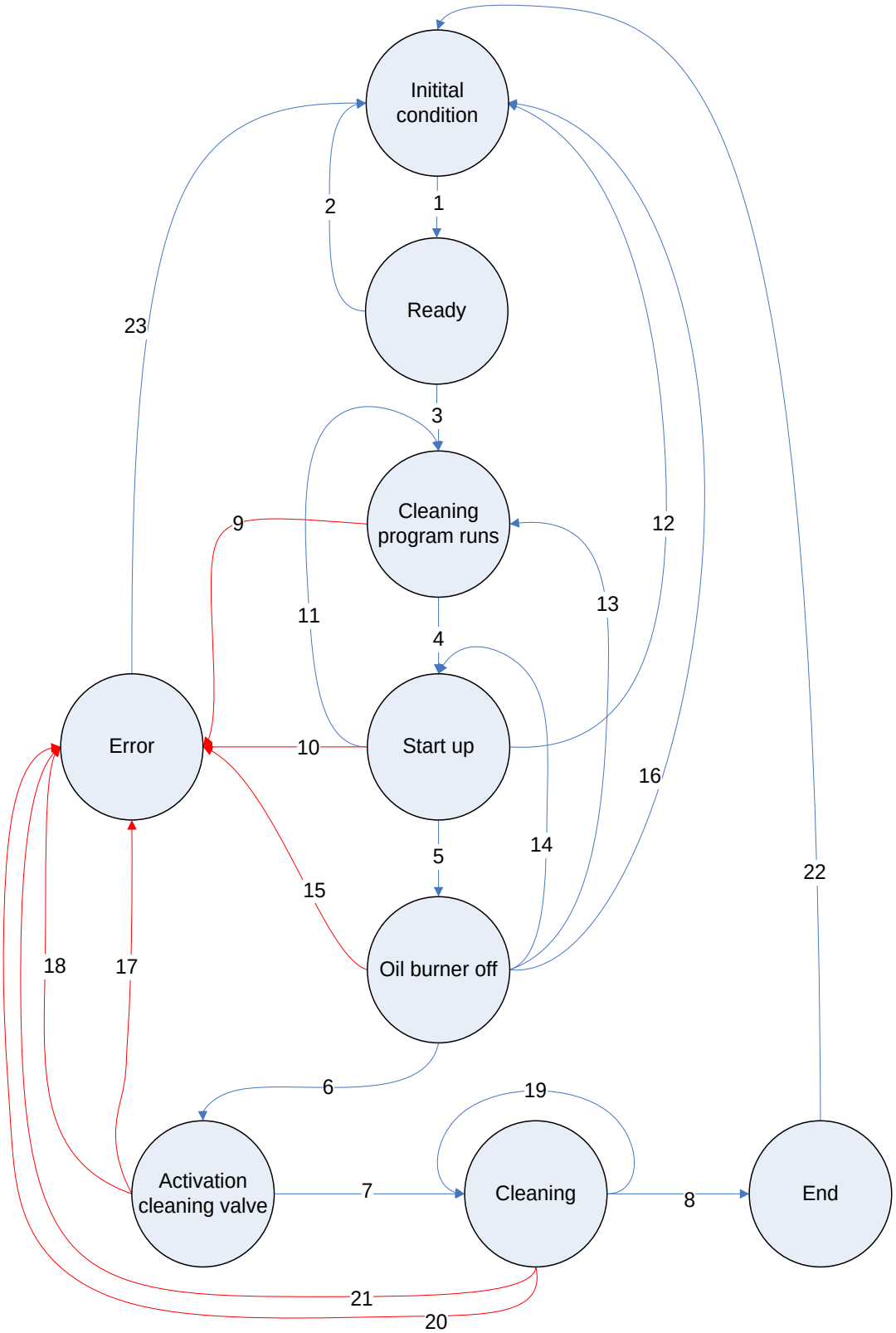

Copyright © Siemens AG 2015 All rights reserved

Explanation of the status graph

Table 3-19

Transition	Transition conditions
1	MAIN_INTL == 1
2	MAIN_INTL == 0
3	OIL_CL_ON == pos. edge **AND** PRG_RUN == 0
4	IGN_READY == 1 **AND** OIL_LANCE_OK == 1
5	GN_OP == 1
6	OV_CLOSED == 1 **AND** AP_MIN_OK == 1 **AND** STV_OPENED == 1 **AND** AD_IGNPOS == 1
7	BV_OPEN == 1
8	T_BL_OUT expired
9, 10	Monitoring time T_MAX expired
11	IGN_READY == 0 **OR** OIL_LANCE_OK == 0
12	MAIN_INTL == 0 **OR** OIL_CL_OFF == 1
13	IGN_READY == 0 **OR** OIL_LANCE_OK == 0
14	IGN_OP == 0
15	Monitoring time T_MAX expired
16	OIL_CL_OFF == 1 **OR** MAIN_INTL == 0
17	OIL_CL_OFF == 1 **OR** MAIN_INTL == 0 **OR** OIL_LANCE_OK == 0 **OR** IGN_READY == 0 **OR** IGN_OP == 0 **OR** OV_CLOSED == 0 **OR** STV_OPENED == 0 **OR** AP_MIN_OK == 0 **OR** AD_IGNPOS == 0
18	Monitoring time T_MAX expired
19	BV_OPEN == 1 *After BV_OPEN == 0 restart cleaning time*
20	Monitoring time T_MAX expired
21	Within cleaning time T_BL_OUT OIL_CL_OFF == 1 **OR** MAIN_INTL == 0 **OR** OIL_LANCE_OK == 0 **OR** IGN_READY == 0 **OR** IGN_OP == 0 **OR** OV_CLOSED == 0 **OR** STV_OPENED == 0 **OR** AP_MIN_OK == 0 **OR** AD_IGNPOS == 0 **OR**
22	OIL_CL_RES == 1
23	OIL_CL_RES == 1 (if error bit 13 was set) QUIT == 1

Copyright © Siemens AG 2015 All rights reserved

Table 3-20

State		Outputs which are switched
Initial state		No outputs switched
Ready		No outputs switched
cleaning program running		CL_RUN := TRUE Start T_MAX
Startup		IGN_ON := TRUE
Oil burner OFF		OIL_BU_OFF := TRUE
Controlling cleaning valve		OPEN_BV := TRUE
Cleaning		Start of cleaning time T_BL_OUT
End		CLEAN_OK := TRUE CL_RUN := FALSE IGN_ON := FALSE OIL_BU_OFF := FALSE OPEN_BV := FALSE
Error	out of 9,10,15	ERROR := TRUE CL_RUN := FALSE IGN_ON := FALSE OIL_BU_OFF := FALSE OPEN_BV := FALSE
	out of 18.20	ERROR := TRUE DIAG 13 := TRUE CL_RUN := FALSE IGN_ON := FALSE OIL_BU_OFF := FALSE OPEN_BV := FALSE
	out of 17, 21	DIAG 13 := TRUE CL_RUN := FALSE IGN_ON := FALSE OIL_BU_OFF := FALSE OPEN_BV := FALSE

Copyright © Siemens AG 2015 All rights reserved

3.6 Function for position monitoring (F_POS_CH)

3.6.1 Introduction

The F_POS_CH function monitors the position of the actuators for air and fuel for keeping the given reference position. Furthermore, the function privies the option of monitoring the reference positions for fuel and air for keeping a surplus level of air. In the case of an error, the block sets an error bit and moves the actuators to a configurable safe position.

Figure 3-19

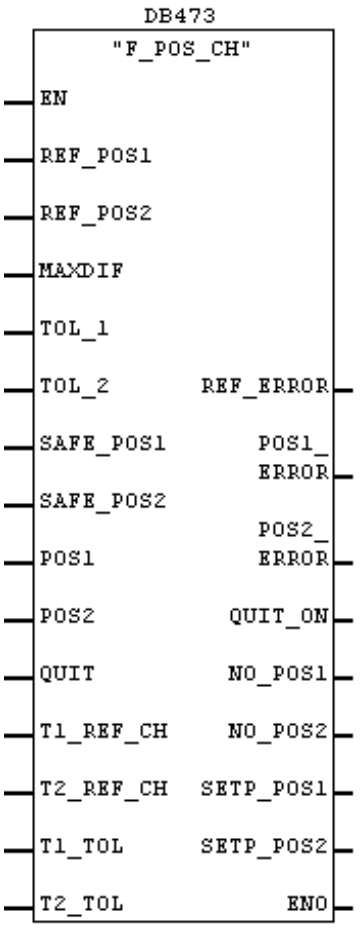

Note When using this function, F_TON (FB 185) must exist in the block folder.

Copyright © Siemens AG 2015 All rights reserved

3.6.2 Connections

All data type BOOL inputs, except for OP_INTL, have a default 0-signal.
All data type TIME inputs have T#0ms pre-assigned.

Table 3-21

Name	Data type	Description
Inputs		
REF_POS1	INT	**Reference position for actuator 1** • REF_POS1 must show a value between 0 and 100. • Input is intended for fuel actuator! • If REF_POS1 is larger REF_POS2 + MAXDIF, REF_ERROR is reported, a reverse comparison is not performed.
REF_POS2	INT	**Reference position for actuator 2** • REF_POS2 must show a value between 0 and 100. • Input is intended for air actuator! • REF_POS2 can have any value larger than REF_POS1! MAXDIF is not evaluated at this input.
MAXDIF	INT	**Maximal difference REF_POS1 - REF_POS2** MAXDIF describes the maximal value by which REF_POS1 can be larger than REF_POS2 • Limited to between 0 and 100. • MAXDIF = 100 separates REF_POS1 and REF_POS2
TOL_1	INT	**Tolerance for actuator 1** Maximal possible deviation (+/-) for actuator 1 • Limited to between 0 and 100.
TOL_2	INT	**Tolerance for actuator 2** Maximal possible deviation (+/-) for actuator 2 • Limited to between 0 and 100.
SAFE_POS1	INT	**Safety position for actuator 1** Position written to SETP_POS1 in the case of an error • Limited to between 0 and 100.
SAFE_POS2	INT	**Safety position for actuator 2** Position written to SETP_POS2 in the case of an error • Limited to between 0 and 100.
POS1	INT	**Measured position for actuator 1** Current position for actuator 1 Limited to between 0 and 100.
POS2	INT	**Measured position for actuator 2** Current position for actuator 2 • Limited to between 0 and 100.
QUIT	BOOL	**Error acknowledgement** Error messages are reset with this input parameter. • The acknowledgement is only given at positive edge.

Copyright © Siemens AG 2015 All rights reserved

Name	Data type	Description
T1_REF_CH	TIME	**Time for actuator 1 (reference position change)** Time in which the reference position output via SETP_POS1 must be read back to POS1
T2_REF_CH	TIME	**Time for actuator 2 (reference position change)** Time in which the reference position output via SETP_POS2 must be read back to POS2
T1_TOL	TIME	**Time for actuator 1 (actuator position change)** Time in which a valid position must be measured again at POS1, if it was left without changing the reference position
T2_TOL	TIME	**Time for actuator 2 (actuator position change)** Time in which a valid position must be measured again at POS2, if it was left without changing the reference position
Outputs		
REF_ERROR	BOOL	**Reference error** • Value range 0-100 was violated • Tolerances were not kept • Difference between REF_POS1 and REF_POS2 is too large.
POS1_ERROR	BOOL	**Position error for actuator 1** Actuator 1 in an invalid position after T1_REF_CH or T1_TOL.
POS2_ERROR	BOOL	**Position error for actuator 2** Actuator 1 in an invalid position after T2_REF_CH or T2_TOL.
QUIT_ON	BOOL	**Quit is active** • 1-signal: a 1-signal is pending at the QUIT input. • 0-signal: a 0-signal is pending at the QUIT input.
NO_POS1	BOOL	**Actuator 1 not in position** • 1-signal: actuator 1 in an invalid position • 0-signal: actuator 1 in a valid position
NO_POS2	BOOL	**Actuator 2 not in position** • 1-signal: actuator 2 in an invalid position • 0-signal: actuator 2 in a valid position
SETP_POS1	INT	**Position for actuator 1** Position verified and output for actuator 1
SETP_POS2	INT	**Position for actuator 2** Position verified and output for actuator 2

NOTICE	**Please note that the configured safety times must comply with the corresponding standards.**

Copyright © Siemens AG 2015 All rights reserved

3.6.3 Mode of operation

The reference positions for actuator 1 and actuator 2 (inputs REF_POS1 and REF_POS2) are checked for meeting a value range and for keeping a certain difference before they are output via the outputs SETP_POS1 and SETP_POS2. The inputs are used to check the reference values given by a non-safe controller for plausibility.

The reference values must be between 0% (closed) and 100% (open). Parameter MAXDIF allows configuring the maximal permitted difference between actuator 2 and actuator 1. This can be prevented, for example, by the reference position for fuel being 100% (open) and that for air 0% (closed).

It is assumed, that actuator 1 is used for the fuel and actuator 2 for the air supply.

The difference is calculated according to the following rule:
REF_POS1 – REF_POS2 > MAXDIF.

REF_ERROR is reported if MAXDIF is exceeded.

If the reference positions lie outside of the valid value range, the configured safety positions SAFE_POS1 and SAFE_POS2 are given to the outputs SETP_POS1 and SETP_POS2.

A reference value is output at the REF_ERROR output.

The positions read back from the actuators (POS1 and POS2) are compared with the positions (SETP_POS1 and SETP_POS2) output to the actuators.

If a reliable value range is violated (SETP_POS1 ± TOL_1 and SETP_POS2 ± TOL_2), this causes the outputs NO_POS1 or NO_POS2 to be set.

If the measured positions (POS1 or POS2) leave the tolerance range without changing the reference position, outputs NO_POS1 or NO_POS2 are also set.

Additionally, the timers T1_TOL or T2_TOL are started. If the measured positions have not reentered the permitted value range within these times, output POS1_ERROR or POS2_ERROR is set and the configured safety position SAFE_POS1 or SAFE_POS2 is sent to output SETP_POS1 or SETP_POS2.

When a reference position (REF_POS1 or REF_POS2) changes, a timer is started. If after the configured time (T1_REF_CH or T2_REF_CH) the measured position POS1 or POS2 does not lie within the permitted value range, an error is output at output POS1_ERROR or POS2_ERROR.

Furthermore, the configured safety positions SAFE_POS1 or SAFE_POS2 are written to output SETP_POS1 or SETP_POS2.

If during time T1_REF_CH or T2_REF_CH the reference positions should change, the timers start again.

Copyright © Siemens AG 2015 All rights reserved

3.6.4 Timing diagram

The picture below shows the signal behavior of function F_POS_CH.

Figure 3-20

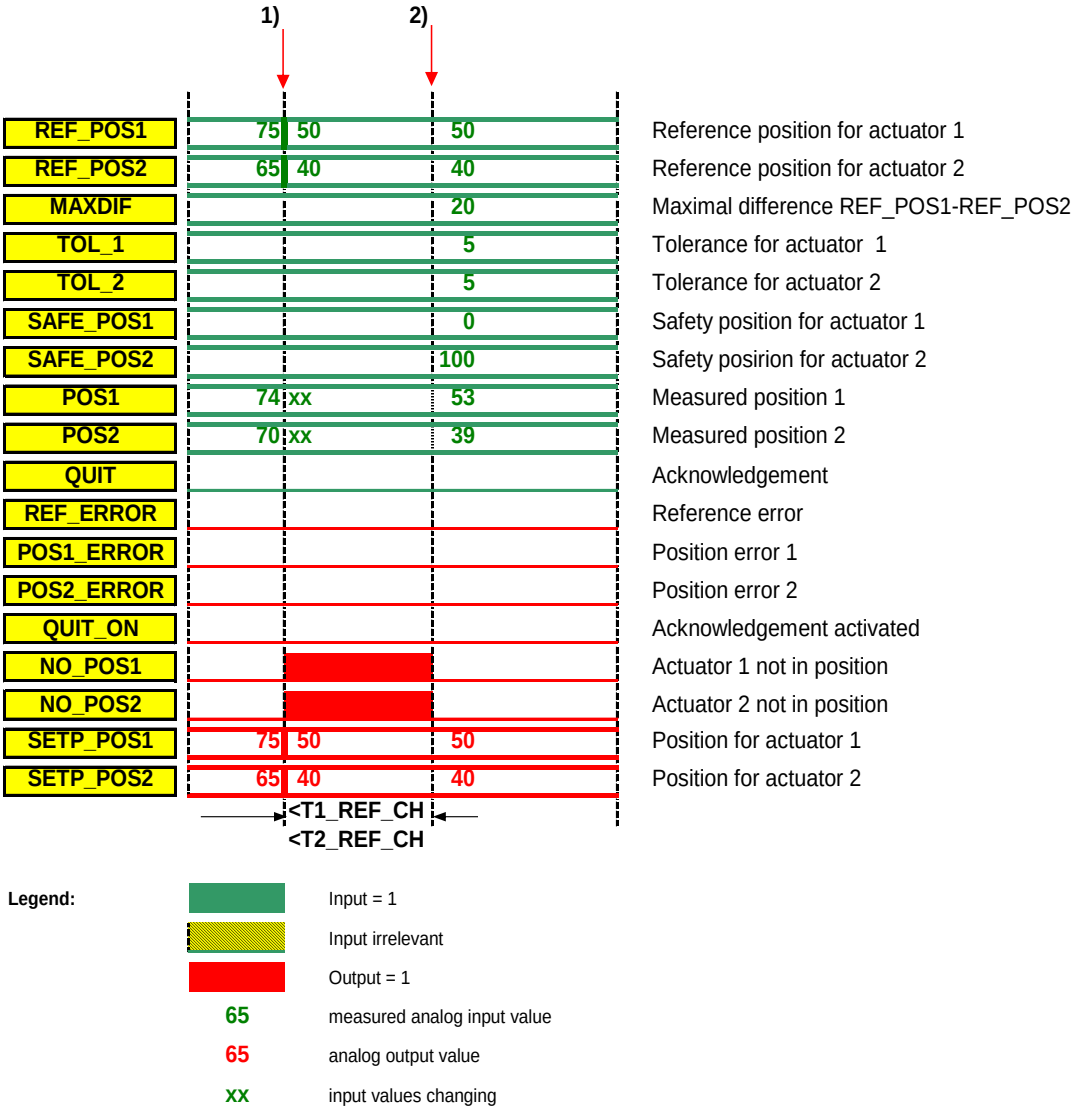

Copyright © Siemens AG 2015 All rights reserved

Description of the optimal signal behavior:

1) Reference position 1 changed from 75% to 50%
   Reference position 2 changed from 65% to 40%
   MAXDIF fallen short off
   Reference positions within the valid value range
   Reference positions written to outputs SETP_POSx
   Timers Tx_REF_CH are started
   Values read back via POSx change and are outside the tolerance
   NO_POSx is set
2) The actuators have reached the correct positions within Tx_REF_CH
   The are within the tolerance and MAXDIF is fallen short of
   NO_POSx is reset

Copyright © Siemens AG 2015 All rights reserved

3.6.5 Status graph

Figure 3-21

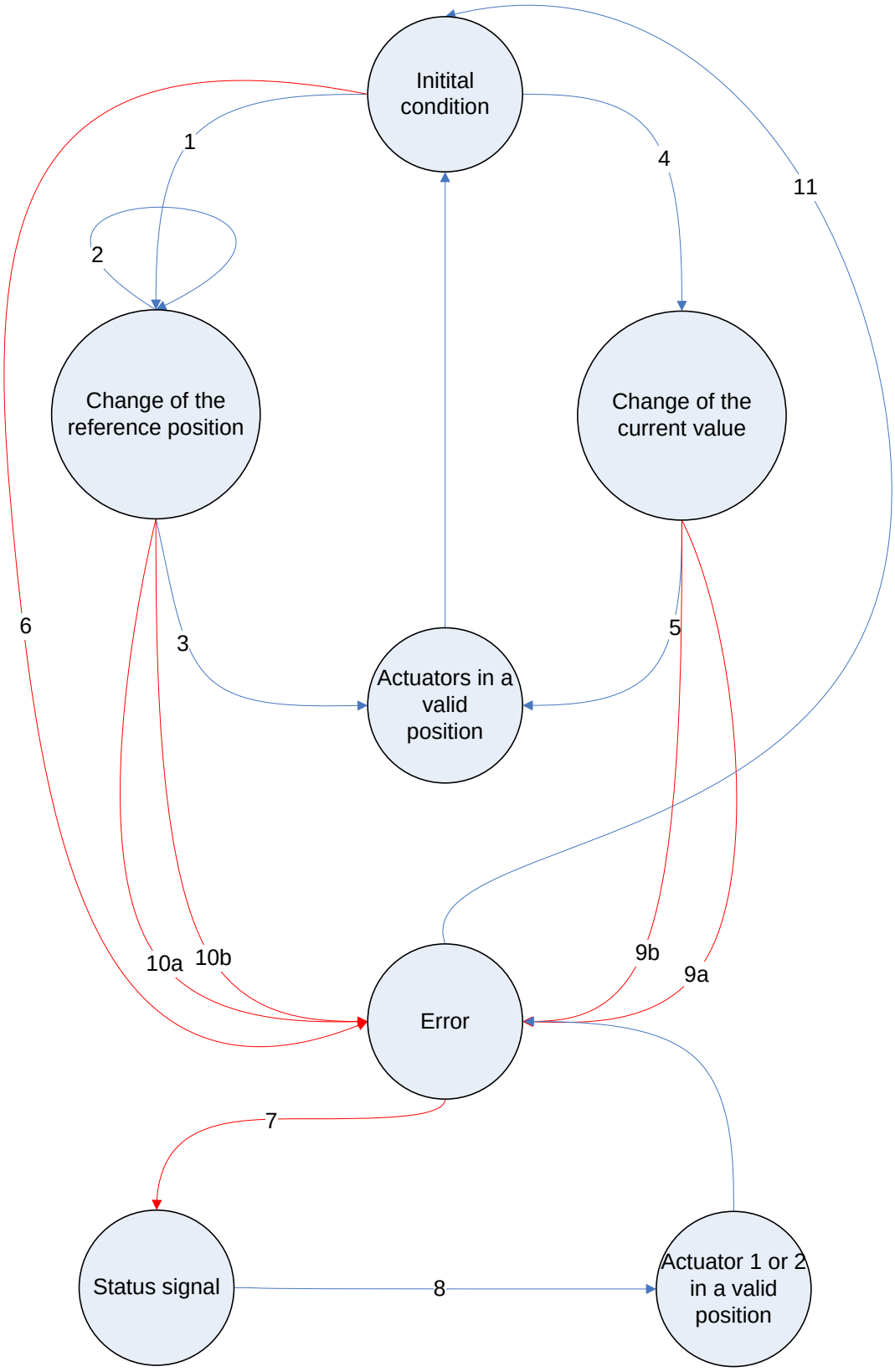

Copyright © Siemens AG 2015 All rights reserved

Explanation of the status graph

Table 3-22

Transition	Transition conditions
1	REF_POS1 ≠ POS1 +/- TOL_1 **OR** REF_POS2 ≠ POS2 +/- TOL_2
2	New REF_POS ≠ POS +- TOL
3	POS1 +/- TOL_1 == SETP_POS1 **AND** POS2 +/- TOL_2 == SETP_POS2
4	POS1 +/- TOL_1 ≠ SETP_POS1 **OR** POS2 +/- TOL_2 ≠ SETP_POS2
5	POS1 +/- TOL_1 == SETP_POS1 **AND** POS2 +/- TOL_2 == SETP_POS2
6	REF_POS1 – REF_POS2 > MAXDIF **OR** 100 < REF_POS1 < 0 **OR** 100 < REF_POS2 < 0
7	POS1 +/- TOL_1 ≠ SETP_POS1 **OR** POS2 +/- TOL_2 ≠ SETP_POS2
8	POS1 +/- TOL_1 == SETP_POS1 **OR** POS2 +/- TOL_2 == SETP_POS2
9a	T1_TOL expired **AND** POS1 +/- TOL_1 ≠ SETP_POS1
9b	T2_TOL expired **AND** POS2 +/- TOL_2 ≠ SETP_POS2
10a	T1_REF_CH expired **AND** POS1 +/- TOL_1 ≠ SETP_POS1
10b	T2_REF_CH expired **AND** POS2 +/- TOL_2 ≠ SETP_POS2
11	QUIT == 1 **AND** REF_POS1 – REF_POS2 <= MAXDIF **AND** 100 > REF_POS1 > 0 **AND** 100 > REF_POS2 > 0

Table 3-23

State	Outputs which are switched
Initial state	
Changing the reference position	NO_POS1 := TRUE Start T1_REF_CH NO_POS2 := TRUE Start T2_REF_CH
Message	NO_POS1 := TRUE Start T1_REF_CH NO_POS2 := TRUE Start T2_REF_CH
Changing the read back value	NO_POS1 := TRUE Start T1_TOL NO_POS2 := TRUE Start T2_TOL
Actuators in position	NO_POS1 := FALSE NO_POS2 := FALSE
Actuator 1 or 2 in position	NO_POS1 := FALSE **OR** NO_POS2 := FALSE

Copyright © Siemens AG 2015 All rights reserved

State		Outputs which are switched
Error	out of 6	REF_ERROR := TRUE SETP_POS1 := SAFE_POS1 SETP_POS2 := SAFE_POS2
	out of 9a,10a	POS1_ERROR := TRUE SETP_POS1 := SAFE_POS1 SETP_POS2 := SAFE_POS2
	out of 9b,10b	POS2_ERROR := TRUE SETP_POS1 := SAFE_POS1 SETP_POS2 := SAFE_POS2

3.7 Function for gas tightness test (F_TIGHTN)

3.7.1 Introduction

The F_TIGHTN function controls the leak test for the safety shut-off valves of the supply pipes which supply gaseous fuel. Prior to starting the gas burner, a verification of the gas tightness must be performed. The gas burner must not be started until the gas tightness test was successful.

Figure 3-22

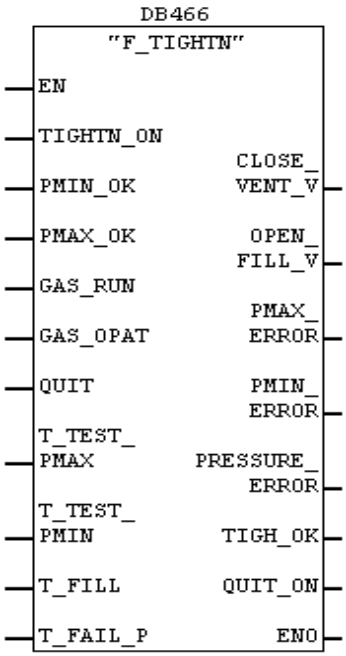

Note

- When using this function, F_TON (FB 185) must exist in the block folder.

Copyright © Siemens AG 2015 All rights reserved

3.7.2 Connections

All data type BOOL inputs, except for OP_INTL, have a default 0-signal.
All data type TIME inputs have T#0ms pre-assigned.

Table 3-24

Name	Data type	Description
Inputs		
TIGHTN_ON	BOOL	**Start command for gas tightness test** A positive edge at this input starts the gas tightness test. After a successful test, the stored "1" signal is reset at output TIGH_OK by means of a positive edge at TIGHTN_ON. The gas tightness test cannot be started while operating a burner (GAS_RUN=1).
PMIN_OK	BOOL	**Pressure monitoring tightness test of SAV 2** • For a 1-signal at this input the measured pressure lies above the configured threshold value. • For a 0-signal at this input, the configured value at the pressure detector is fallen short of or an error exists at the pressure switch.
PMAX_OK	BOOL	**Pressure monitoring tightness test of SAV 1** • For a 1-signal at this input the measured pressure lies below the configured threshold value. • For a 0-signal at this input, the configured value at the pressure detector is exceeded or an error exists at the pressure switch. A 1-signal must be active at PMAX_OK, so the function can be started via TIGHTN_ON.
GAS_RUN	BOOL	**Gas startup program active** If a 1-signal is pending at this input, the block cannot be started. With this input it is polled, whether the burner is just starting and the valves must not be tested.
GAS_OPAT	BOOL	**Gas burner in operation** As soon as the gas burner is in operation, the output parameter "Gas tightness test successful" (TIGH_OK=1) is set to zero. If the gas burner is running, the 1-signal at GAS_OPAT prevents the gas tightness test from being switched on. If GAS_OPAT becomes TRUE during the test, the gas tightness test is interrupted.
QUIT	BOOL	**Error acknowledgement** Error messages are reset with this input parameter. The acknowledgement is only given at positive edge
T_TEST_PMAX	TIME	**Test time for verifying the tightness of the first safety shut-off valve** Within the given period of time, the tightness of SAV 1 is checked. • Guide value: 0min < T_TEST_PMAX < 2min

Copyright © Siemens AG 2015 All rights reserved

Name	Data type	Description
T_TEST_PMIN	TIME	**Test time for verifying the tightness of the second safety shut-off valve and the venting valve** Within the given period of time, the tightness of SAV 2 and the venting valve is checked. • Guide value: 0min < T_TEST_PMIN < 2min
T_FAIL_P	TIME	**Failure time** A 1-signal must no be active simultaneously at PMIN_OK and PMAX_OK for longer than T_FAIL_P, otherwise an error is pending**.**
T_FILL	TIME	**Filling time** T_FILL specifies the value of how long SAV 1 remains open for filling the space between the safety shut-off valves and the venting valve. • Guide value: 0s < T_FILL < 3s
Outputs		
CLOSE_VENT_V	BOOL	**Controlling the venting valve** If a 1-signal is pending at the output, the venting valve is closed (opened without electrical power).
OPEN_FILL_V	BOOL	**Controlling the first SAV** If a 1-signal is pending at the output, the first safety shut-off valve is opened.
PMAX_ERROR	BOOL	**1. SAV leaking** Error message for leaking safety shut-off valve This message is reset via the QUIT input.
PMIN_ERROR	BOOL	**2. Second SAV or venting valve leaking** Error message for leaking second safety shut-off valve or leaking venting valve This message is reset via the QUIT input.
PRESSURE_ERROR	BOOL	**PMIN_OK/ PMAX_OK error** A 1-signal must no be active simultaneously at PMIN_OK and PMAX_OK for longer than T_FAIL_P, otherwise an error is pending**.** This message is reset via the QUIT input.
TIGH_OK	BOOL	**Tightness test successful** Signals that the gas tightness test was performed successfully. Reset by input GAS_OPAT or a positive edge at TIGHTN_ON.
QUIT_ON	BOOL	**Quit is active** • 1-signal: a 1-signal is pending at the **QUIT** input. • 0-signal: a 0-signal is pending at the **QUIT** input.

NOTICE	**Please note that the configured safety times must comply with the corresponding standards.**

Copyright © Siemens AG 2015 All rights reserved

3.7.3 Mode of operation

Function principle of the gas tightness test

Pressure sensors P1 and P2 displayed in the pictures monitor the pressure in the various test phases.

Note The venting valve is opened without electrical power

1. Prior to the gas tightness test, both safety shut-off valves (SAV 1 and SAV 2) are closed and the venting is opened. The pressure in the space between the valves is equal to atmospheric pressure.
2. When starting test phase 1, the venting valve is closed. During the testing time, both safety shut-off valves and the venting remain closed. If the pressure rises due to the possibly leaking first safety shut-off valve, this is reported by pressure switch P1.

Figure 3-23 Test phase 1 of the tightness test

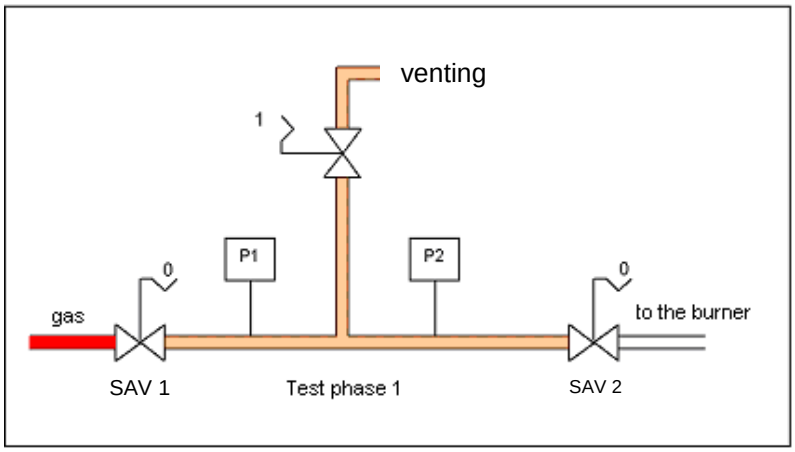

3. If the first safety shut-off valve (SAV 1) is tight, it is opened for a certain duration of time and the venting valve is closed. The gas pressure now exists between the three valves. Using P2 it is now checked whether the space between the valves decompresses. If the pressure reduces, either the safety shut-off valve or the venting valve is leaking.

Figure 3-24 Test phase 2 of the tightness test

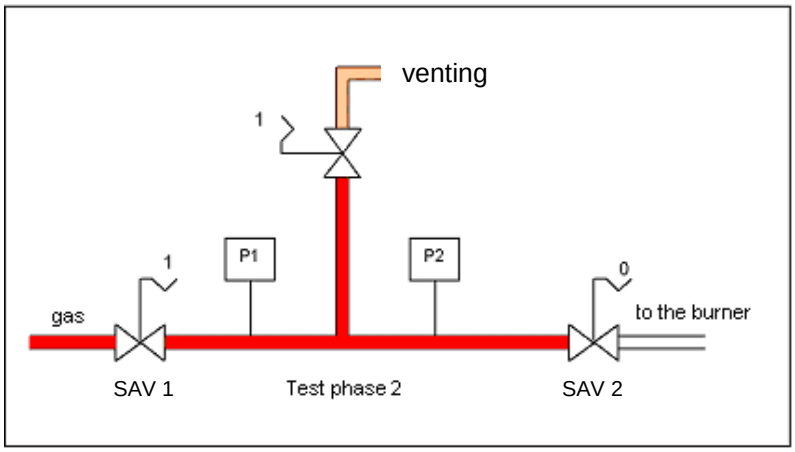

Copyright © Siemens AG 2015 All rights reserved

Function principle F_TIGHTN

The gas tightness test is started by a positive edge at start input TIGHTN_ON. For the duration of the gas tightness test, F_TIGHTN takes on the control of the first safety shut-off valve and the venting valve. After successfully completing the gas tightness test, the control of the safety shut-off valve is taken on by the F_GAS_BU function. The picture below displays an example of the function for controlling all of the valves.

Figure 3-25

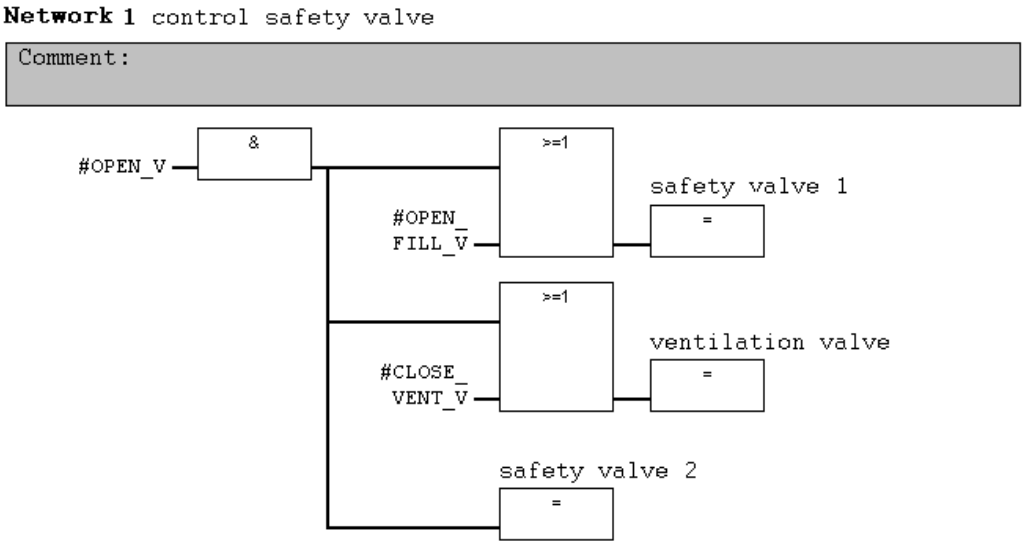

#OPEN_V:	F_GAS_BU
#OPEN_FILL_V:	F_TIGHTN
#CLOSE_VENT_V:	F_TIGHTN

Note

If an implausible pressure change is detected during the test, or if error message PRESSURE_ERROR is pending, the gas tightness test is interrupted and the outputs for controlling the valves supply a 0-signal. The safety shut-off valves are then closed, whereas the venting valve is opened (opened without electrical power). Error message PRESSURE_ERROR is pending if at both outputs PMIN_OK and PMAX_OK a 1-signal is active at the same time and for longer than T_FAIL_P. Acknowledgement is required for this message.

Copyright © Siemens AG 2015 All rights reserved

3.7.4 Time diagrams

The picture below shows the signal behavior of function F_TIGHTN.

Figure 3-26

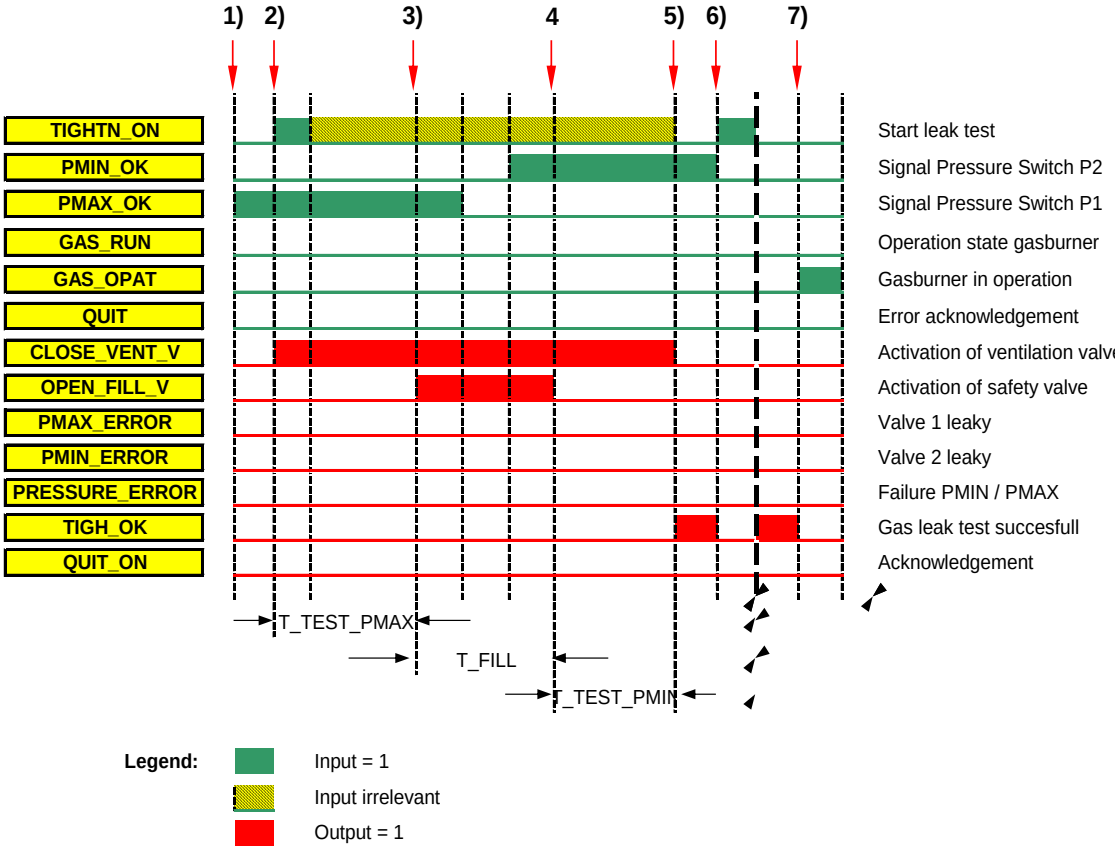

Description of the optimal signal behavior:

1) Prior to the test, the gas pressure in the space between the valves equals the air pressure
   (PMAX_OK=1)
2) The gas tightness test is started by means of the pushbutton
   (edge at TIGHTN_ON)
   Venting valve is closed (CLOSE_VENT_V=1)
   Timer T_TEST_PMAX starts
3) If no increase of the pressure is detected within T_TEST_PMAX, (PMAX_OK remains 1), timer T_FILL is started
   Safety shut-off valve 1 is opened (OPEN_FILL_V=1) and the fuel is filled into the space between the valves
4) After T_FILL has expired, SAV 1 is closed (OPEN_FILL_V=0)
   Timer T_TEST_PMIN starts
5) If within T_TEST_PMIN no decompression exists (PMIN_OK remains 1), a message is output (TIGH_OK=1)
   Gas tightness test completed
6) The 1-signal at TIGHT_OK is reset with a positive edge at input TIGHTN_ON.
7) TIGH_OK can also be reset with GAS_OPAT.

Copyright © Siemens AG 2015 All rights reserved

3.7.5 Status graph

Figure 3-27

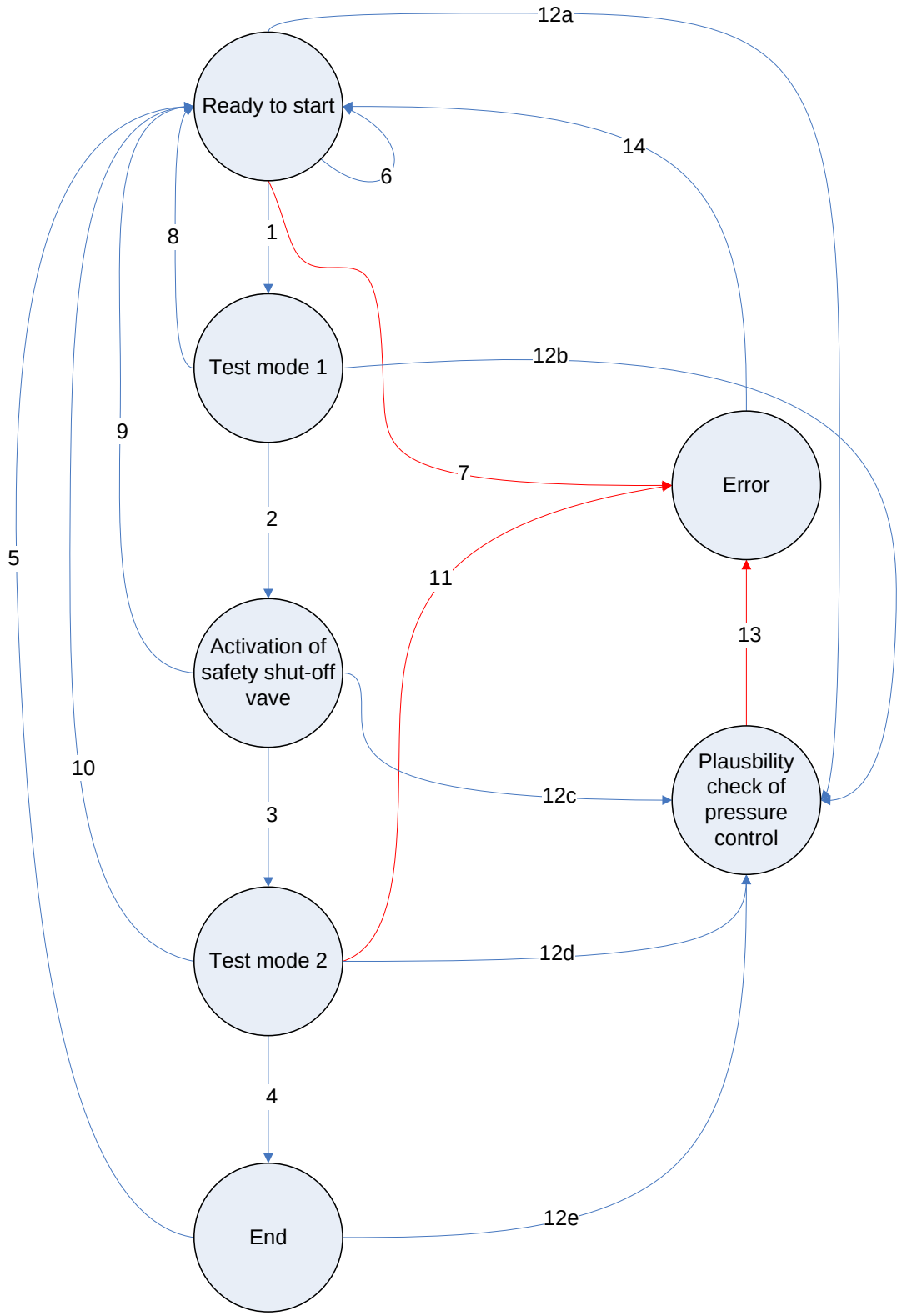

Copyright © Siemens AG 2015 All rights reserved

Explanation of the status graph

Table 3-25

Transition	Transition conditions
1	PMAX_OK == 1 **AND** TIGHTN_ON == pos. edge **AND** GAS_RUN == 0 **AND** GAS_OPAT == 0
2	Safety time T_TEST_PMAX has expired
3	PMAX_OK == 0 **AND** PMIN_OK == 1 **AND** T_FILL expired
4	Safety time T_TEST_PMIN has expired
5	TIGHTN_ON == pos. edge **OR** GAS_OPAT == 1
6	TIGHTN_ON == pos. edge **AND** (GAS_RUN == 1 **OR** GAS_OPAT == 1 **OR** PMAX_OK == 0)
7	PMAX_OK == 0
8	GAS_RUN == 1 **OR** GAS_OPAT == 1
9	GAS_RUN == 1 **OR** GAS_OPAT == 1
10	GAS_RUN == 1 **OR** GAS_OPAT == 1
11	PMIN_OK == 0
12 a-e	PMAX_OK := TRUE **OR** PMIN_OK := TRUE
13	TIMER T_FAIL_P expired
14	QUIT == 1

Table 3-26

State		Outputs which are switched
Ready for starting		No outputs switched
Test phase 1		CLOSE_VENT_V := TRUE Safety time T_TEST_PMAX running
Controlling the safety shut-off valve		OPEN_FILL_V := TRUE Filling time T_FILL running
Test phase 2		OPEN_FILL_V := FALSE Safety time T_TEST_PMIN running
End		TIGH_OK := TRUE CLOSE_VENT_V := FALSE
Error	out of 7	PMAX_ERROR := TRUE
	out of 11	PMIN_ERROR := TRUE
	out of 13	PRESSURE_ERROR := TRUE
Pressure switch plausibility check		Timer T_FAIL_P running

Copyright © Siemens AG 2015 All rights reserved

4 Interaction of the Blocks

4.1 Overview

This chapter introduces an interconnection example for an oil and gas burner application respectively. The type of interconnection depends on the requirements of the application and cannot be assigned universally. If your application requires other parameters and/or another interconnection, it must be adjusted according to your judgement.

The aim of this interconnection example is only the illustration of signal flows between the individual blocks and their interaction.

The individual interconnections are numbered and are explained in a subsequent table for oil and gas burner controllers.

Using the interconnection example contained in this chapter is no guarantee for meeting the legal requirements, nor can applications generally be controlled with it.
The examples given in this chapter shall only illustrate how the individual functions interact.

Copyright © Siemens AG 2015 All rights reserved

Copyright © Siemens AG 2015 All rights reserved

4.2 Interconnection example F_GAS_BU

Figure 4-1 Interconnection example of a gas burner control

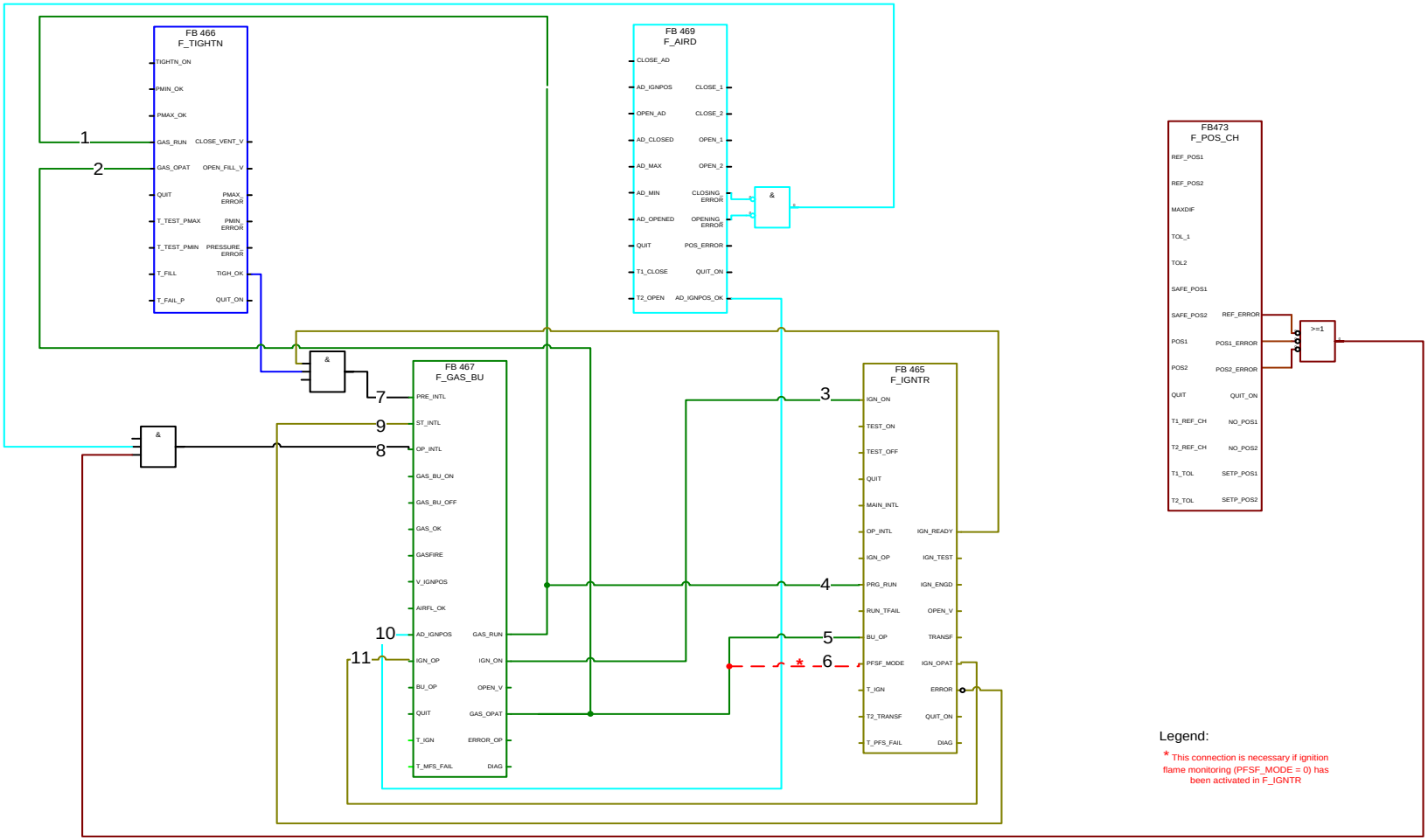

4.2.1 Explanations on interconnection example F_GAS_BU

Table 4-1 F_TIGHTN

No.	Input signal	Signal source
1	GAS_RUN	F_GAS_BU.GAS_RUN
	Is GAS_RUN active, a start the gas tightness test will be prevented or a running gas tightness test is aborted.	
2	GAS_OPAT	F_GAS_BU.GAS_OPAT
	GAS_OPAT resets the TIGH_OK output	

Table 4-2 F_IGNTR

No.	Input signal	Signal source
3	IGN_ON	F_GAS_BU.IGN_ON
	Normal igniter operation is started with IGN_ON	
4	PRG_RUN	F_GAS_BU.GAS_RUN
	To start the ignition test, no other programs must be in operation (PRG_RUN=0)	
5	BU_OP	F_GAS_BU.GAS_OPAT
	GAS_OPAT on BU_OP resets the test function of the igniter	
6	PFSF_MODE	F_GAS_BU.GAS_OPAT
	This interconnection is necessary if the ignition flame detector has detected the main flame. This interconnection switches off the plausibility test of the ignition flame when the burner starts up	

Table 4-3 F_GAS_BU

No.	Input signal	Signal source
7	PRE_INTL	F_TIGHTN.TIGH_OK **AND** F_IGNTR.IGN_READY
	Without IGN_READY=1 and TIGH_OK=1, GAS_BU cannot start This interconnection signals to the burner function that the ignition function is ready and the ignition function can be started.	
8	OP_INTL	(F_POS_CH.REF_ERROR **NOR** F_POS_CH.POS1_ERROR **NOR** F_POS_CH.POS2_ERROR) **AND** (F_AIRD.CLOSING_ERROR **NOR** F_AIRD:OPENING_ERROR)
	The interconnection with GAS_BU is only necessary if the running gas burner shall be switched off at pending position errors.	
9	ST_INTL	**NOT** F_IGNTR.ERROR
	With a pending ERROR, GAS_BU cannot start; the ignition function signals an error via ERROR. Should this error lead to switching off the main burner, the interconnection must be set.	
10	AD_IGNPOS	F_AIRD.AD_IGNPOS_OK
	When starting in single-burner operation, the air dampers must be in ignition position. This is signaled by AD_IGN_POS_OK.	
11	IGN_OP	F_IGNTR.IGN_OPAT
	Fuel valves in GAS_BU can only be opened if IGN_OP=1; the ignition function signals via IGN_OPAT that the igniter has started successfully. This is necessary to start the main burner	

Copyright © Siemens AG 2015 All rights reserved

Copyright © Siemens AG 2015 All rights reserved

4.3 Interconnection example F_OIL_BU

Figure 4-2 Interconnection example of a oil burner control

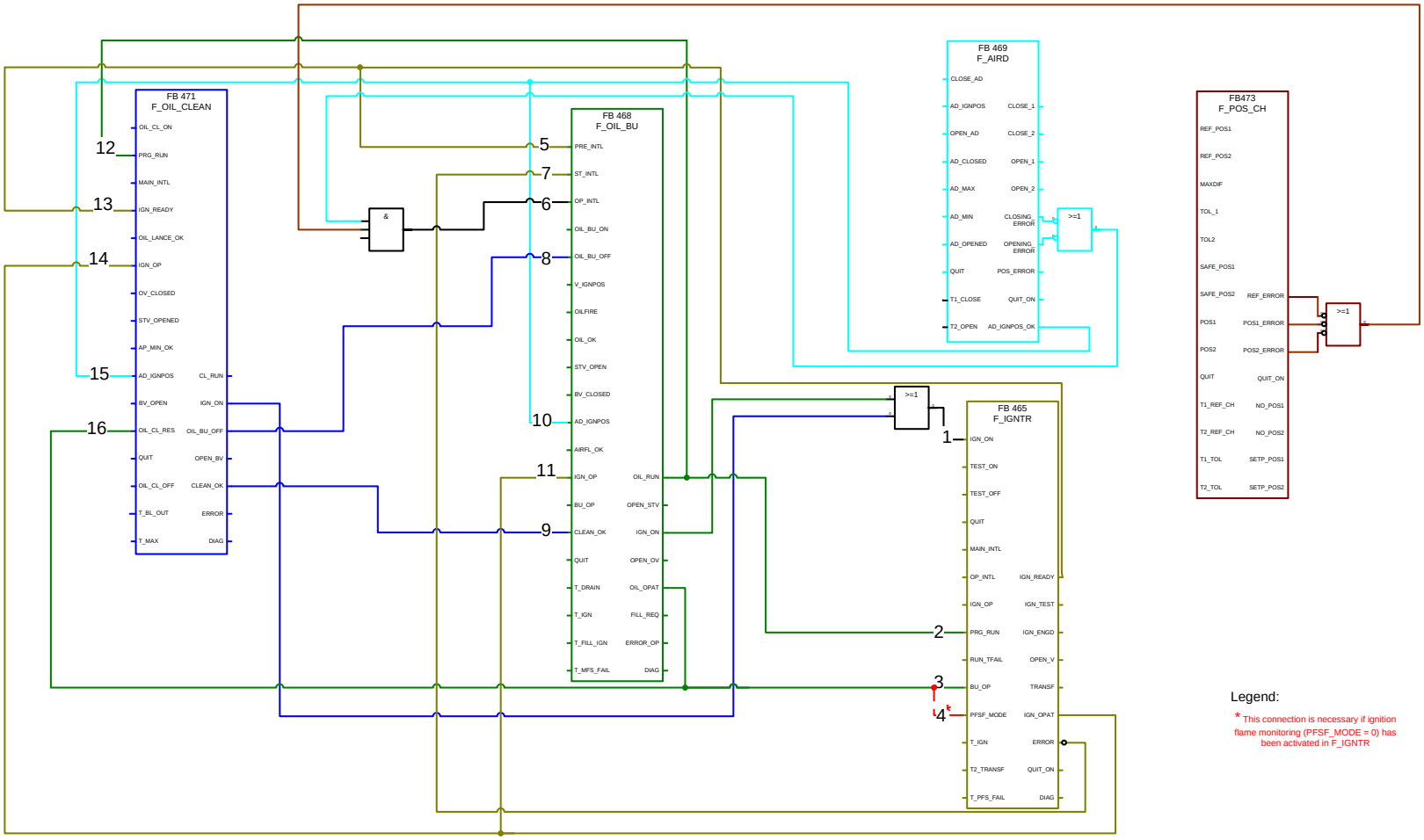

4.3.1 Explanation of interconnection example F_OIL_BU

Table 4-4 F_IGNTR

No.	Input signal	Signal source
1	IGN_ON	F_OIL_BU.IGN_ON **OR** F_OIL_CLEAN.IGN_ON
	IGN_ON of OIL_BU or of OIL_CLEAN activates the igniter	
2	PRG_RUN	F_OIL_BU.OIL_RUN
	This interconnection prevents starting the igniter, if the oil burner is in operation.	
3	BU_OP	F_OIL_BU.OIL_OPAT
	This resets the igniter test.	
4	PFSF_MODE	F_OIL_BU.OIL_OPAT
	This interconnection is necessary when the ignition flame detector sees the main flame. This interconnection switches off the plausibility test of the ignition flame when the burner starts up.	

Table 4-5 F_AIRD

No.	Input signal	Signal source
5	AD_IGNPOS	F_OIL_CLEAN.CL_RUN **OR** (F_OIL_BU.OIL_RUN **AND NOT** “other burners in operation”)
	AD_IGNPOS is set if the cleaning program is running or OIL_RUN = 1 and no further burner is in operation.	

Table 4-6 F_OIL_BU

No.	Input signals	Signal source
6	PRE_INTL	F_IGNTR.IGN_READY
	Without IGN_READY=1 and TIGH_OK=1, OIL_BU cannot start. This interconnection signals to the burner function that the ignition function is ready and the ignition function can be started.	
7	OP_INTL	(F_POS_CH.REF_ERROR **NOR** F_POS_CH.POS1_ERROR **NOR** F_POS_CH.POS2_ERROR) **AND** (F_AIRD.CLOSING_ERROR **NOR** F_AIRD.OPENING_ERROR)
	The interconnection with OIL_BU is only necessary if the oil burner shall be switched off at pending position errors.	
8	ST_INTL	**NOT** F_IGNTR.ERROR
	With a pending ERROR, OIL_BU cannot start; the ignition function signals an error via ERROR. Should this error lead to switching off the main burner, the interconnection must be set.	
9	OIL_BU_OFF	F_OIL_CLEAN.OIL_BU_OFF
	OIL_BU_OFF causes a stop of the oil burner. This interconnection is necessary, since otherwise, cleaning the oil lance would start in oil operation mode.	
10	CLEAN_OK	F_OIL_CLEAN.CLEAN_OK
	If CLEAN_OK has been set, the burner was cleaned and time T_FILL_IGN is used as safety time or filling time. This interconnection is necessary, since otherwise, a startup process is cancelled after cleaning, since the safety time is too short.	

Copyright © Siemens AG 2015 All rights reserved

No.	Input signals	Signal source
11	AD_IGNPOS	F_AIRD.AD_IGNPOS_OK
	AD_IGN_POS_OK must have been set in order to start the burner in single-burner mode.	
12	IGN_OP	F_IGNTR.IGN_OPAT
	Fuel valves in OIL_BU can only be opened if IGN_OP=1; the ignition function signals via IGN_OPAT that the igniter has started successfully. This is necessary to start the main burner.	

Table 4-7 F_OIL_CLEAN

No.	Input signals	Signal source
13	PRG_RUN	F_OIL_BU.OIL_RUN
	OIL_RUN on PRG_RUN causes the cleaning process to be started only if the oil burner is out of service.	
14	IGN_READY	F_IGNTR.IGN_READY
	Due to this interconnection, the signal to the cleaning function states that the ignition function is ready and can be started.	
15	IGN_OP	F_IGNTR.IGN_OPAT
	The ignition function signals via IGN_OPAT, that the igniter was started successfully. This condition is necessary so the cleaning function can be started.	
16	AD_IGNPOS	F_AIRD.AD_IGNPOS_OK
	AD_IGN_POS_OK must have been set in order to start cleaning function.	
17	OIL_CL_RES	F_OIL_BU.OIL_OPAT
	OIL_OPAT on OIL_CL_RES switches the cleaning program off.	

Copyright © Siemens AG 2015 All rights reserved

5 Migration

In the course of transforming the “Failsafe Function Blocks for Burner Technology” (Former order no. 9AL3100-1AD54) into the function example, some connection designations were changed for a clearer understanding.

The functionality has not changed.
The version V1.0 of this function example correlates the version V1.3 of “Failsafe Function Blocks for Burner Technology” for Distributed Safety.

Subsequently, there is a list of the changed connection designations

F_ARID

Table 5-1

Previous designation	New designation
Inputs	
AD_OPEN	AD_OPENED
Outputs	
FAIL_ADC	CLOSING_ERROR
FAIL_ADO	OPENING_ERROR
FAIL_POS	POS_ERROR

F_GAS_BU

Table 5-2

Previous designation	New designation
Inputs	
SW_INTL	PRE_INTL
PROTEC	OP_INTL
STA_GBU	GAS_BU_ON
STO_GBU	GAS_BU_OFF
TIME_GBU	T_IGN
MFSF_Time	T_MSF_Fail
Outputs	
GBU_OPAT	GAS_OPAT
PROTEC_F	ERROR_OP

Copyright © Siemens AG 2015 All rights reserved

F_IGNTR

Table 5-3

Previous designation	New designation
Inputs	
IGNT_ON	TEST_ON
IGNT_OFF	TEST_OFF
INT_FLUF	MAIL_INTL
SW_COND	OP_INTL
Time1	T1_IGN
TIME2	T2_TRANSF
PFSF_Time	T_PFS_FAIL
Outputs	
ING_READ	IGN_READY
DISRUP	ERROR

F_OIL_BU

Table 5-4

Previous designation	New designation
Inputs	
SW_INTL	PRE_INTL
ST_INTRL	ST_INTL
PROTEC	OP_INTL
STA_OBU	OIL_BI_ON
STO_OBU	OIL_BU_OFF
CSTV_CLO	BC_CLOSED
E_CLEAN	CLEAN_OK
T2_ZSI	T_IGN
MFSF_Time	T_MFS_FAIL
T3_LSI	T_FILL_IGN
T1_VDZ	T_DRAIN
Outputs	
PROTEC_F	ERROR_OP
GCLEAN	FILL_REQ

Copyright © Siemens AG 2015 All rights reserved

F_OIL_CLEAN

This function was previously called F_OIL_ST

Table 5-5

Previous designation	New designation
Inputs	
OILP_ON	OIL_CL_ON
PROTEC	MAIN_INTL
SW_COND	TGN_READY
OL_ON	OIL_LANCE_OK
OV_CLOS	OC_CLOSED
AV_OPEN	STV_OPENED
AP_MIN	AP_MIN_OK
AD_IGPOS	AD_INGPAS
OILP_RS	OIL_CL_RES
OILP_OFF	OIL_CL_OFF
BL_TIME	T_BL_OUT
T_DISRUP	T_MAX
Outputs	
STPR_ON	CL_RUN
OILBU_OF	OIL_BU_OFF
BV_OFF	OPEN_BV
END	CLEAN_OK
DISRUP	ERROR

Copyright © Siemens AG 2015 All rights reserved

F_POS_CH

Table 5-6

Previous designation	New designation
Inputs	
SAF_POS1	SAFE_POS1
SAF_POS2	SAFE_POS2
POS1_M	POS1
POS2_M	POS2
T1_RCH	T1_REF_CH
T2_RCH	T2_REF_CH
T1_NPO	T1_TOL
T2_NPO	T2_TOL
Outputs	
FAIL_REF	REF_ERROR
FAIL_1	POS1_ERROR
FAIL_2	POS2_ERROR
POS1_OUT	SETP_POS1
POS2_OUT	SETP_POS2

F_TIGHTN

Table 5-7

Previous designation	New designation
Inputs	
ST_TT	TIGHTN_ON
PMIN	PMIN_OK
PMAX	PMAX_OK
T1_PS	T_TEST_PMAX
T2_PS	T_TEST_PMIN
T_FUEL	T_FILL
TFAIL_P	T_FAIL_P
Outputs	
E_VENT	CLOSE_VENT_V
E_FILL	OPEN_FILL_V
V1_N_T	PMAX_ERROR
V2_NT	PMIN_ERROR
FAIL_P	PRESSURE_ERROR

Copyright © Siemens AG 2015 All rights reserved

6 Appendix

6.1 Signatures

Table 6-1

Block number	Block name	Block signature	Initial value signature
FB 465	F_IGNTR	EDC6	651F
FB 466	F_TIGHTN	4799	485
FB 467	F_GAS_BU	6F3D	55E3
FB 468	F_OIL_BU	D9F4	827C
FB 469	F_AIRD	83F9	347B
FB 471	F_OIL_CLEAN	6D90	A4C9
FB 473	F_POS_CH	DAFE	3673

6.2 Standards

In not noticed otherwise the releases of referred standards are

- EN746-2:2010
- EN12067-2:2001

6.3 Links & Literature

Table 6-2

	Topic	Title
\1\	Reference to this entry	http://support.automation.siemens.com/WW/view/en/73608380
\2\	Siemens Industry Online Support	http://support.automation.siemens.com
\3\		

6.4 History

Table 6-3

Version	Date	Modifications
V1.0	06/2013	First version
V1.0.1	08/2015	Correction of the description of PMIN_OK and PMAX_OK in Table 3-24

Copyright © Siemens AG 2015 All rights reserved