SIEMENS

Edition 12/2023

SYSTEM MANUAL

SIMATIC

ET 200AL

ET 200AL Distributed I/O System

support.industry.siemens.com

SIEMENS

SIMATIC

ET 200AL
Distributed I/O system

System Manual

Introduction 1

Safety instructions 2

Industrial cybersecurity 3

New properties/functions 4

System overview 5

Application planning 6

Mounting 7

Connecting 8

Configuring 9

Configuration control (option handling) 10

Commissioning 11

Maintenance 12

Technical specifications 13

Safety-related shutdown of ET200AL standard modules A

Dimension drawings B

12/2023
A5E31861578-AL

Continued on next page

ET 200AL
Distributed I/O system

System Manual

Legal information

Warning notice system

This manual contains notices you have to observe in order to ensure your personal safety, as well as to prevent damage to property. The notices referring to your personal safety are highlighted in the manual by a safety alert symbol, notices referring only to property damage have no safety alert symbol. These notices shown below are graded according to the degree of danger.

⚠ DANGER
indicates that death or severe personal injury **will** result if proper precautions are not taken.

⚠ WARNING
indicates that death or severe personal injury **may** result if proper precautions are not taken.

⚠ CAUTION
indicates that minor personal injury can result if proper precautions are not taken.

NOTICE
indicates that property damage can result if proper precautions are not taken.

If more than one degree of danger is present, the warning notice representing the highest degree of danger will be used. A notice warning of injury to persons with a safety alert symbol may also include a warning relating to property damage.

Qualified Personnel

The product/system described in this documentation may be operated only by **personnel qualified** for the specific task in accordance with the relevant documentation, in particular its warning notices and safety instructions. Qualified personnel are those who, based on their training and experience, are capable of identifying risks and avoiding potential hazards when working with these products/systems.

Proper use of Siemens products

Note the following:

⚠ WARNING
Siemens products may only be used for the applications described in the catalog and in the relevant technical documentation. If products and components from other manufacturers are used, these must be recommended or approved by Siemens. Proper transport, storage, installation, assembly, commissioning, operation and maintenance are required to ensure that the products operate safely and without any problems. The permissible ambient conditions must be complied with. The information in the relevant documentation must be observed.

Trademarks

All names identified by ® are registered trademarks of Siemens Aktiengesellschaft. The remaining trademarks in this publication may be trademarks whose use by third parties for their own purposes could violate the rights of the owner.

Disclaimer of Liability

We have reviewed the contents of this publication to ensure consistency with the hardware and software described. Since variance cannot be precluded entirely, we cannot guarantee full consistency. However, the information in this publication is reviewed regularly and any necessary corrections are included in subsequent editions.

Siemens Aktiengesellschaft
Digital Industries
Postfach 48 48
90026 NÜRNBERG
GERMANY

A5E31861578-AL
Ⓟ 01/2024 Subject to change

Copyright © Siemens 2014 - 2023.
All rights reserved

Table of contents

1 Introduction ... 9

1.1 Introduction ... 9

1.2 Siemens Industry Online Support ... 11

1.3 Industry Mall ... 11

1.4 ET 200AL Guide ... 12
1.4.1 Information classes ET 200AL ... 12
1.4.2 Basic tools ... 13
1.4.3 S7 Failsafe Configuration Tool (S7-FCT) ... 15
1.4.4 SIMATIC Technical Documentation ... 15

2 Safety instructions ... 18

2.1 Warnings in this document ... 18

2.2 Safety-related symbols for IP65/IP67 modules ... 18

2.3 Intended use ... 19

2.4 Changes to the device and spare parts ... 19

2.5 Target group and personnel qualifications ... 19

2.6 Personal protective equipment ... 20

2.7 Working on electrical parts ... 20

2.8 Residual risks ... 21
2.8.1 Live parts ... 21
2.8.2 Conductive pollution ... 21
2.8.3 Overheating ... 22
2.8.4 Uncontrolled movements ... 22
2.8.5 Unsafe operating states ... 22

2.9 Behavior in case of emergency ... 23

2.10 Material damage ... 23
2.10.1 Transport and storage ... 23
2.10.2 Installation and connection ... 23

3 Industrial cybersecurity ... 24

3.1 Cybersecurity information ... 24

3.2 Security update notification ... 25

3.3 Basic information on industrial cybersecurity ... 25
3.3.1 Definition of industrial cybersecurity ... 25
3.3.2 Objectives of industrial cybersecurity ... 25

3.4 Integrated security concept and security strategies ... 26

3.4.1 Comprehensive security concept "Defense in Depth" 26
3.4.2 Security management 26
3.5 Operational application environment and security assumptions 28
3.5.1 Intended use 28
3.5.2 Requirements for the operational application environment and security assumptions 29
3.6 Security properties of the devices 30
3.7 Secure operation of the system 30
3.7.1 Hardening measures 30
3.7.2 Secure configuration 30
3.7.3 Handling of sensitive data 31
3.7.4 Regular firmware updates 31
3.7.5 Notifications about security vulnerabilities (Siemens Security Advisories) 31
3.7.6 Data backup 32
3.7.7 Security checks 32
3.7.8 Secure decommissioning 32
3.7.8.1 Securely removing data 33
3.7.8.2 Recycling and disposal 34
3.8 Secure operation of the engineering software 34
3.9 Secure operation of interface modules 34
3.9.1 Data integrity 34
3.9.2 Signed firmware update 36
3.10 Secure operation of I/O modules 37
3.11 Secure operation of the power supply modules 37

4 New properties/functions 38

5 System overview 39
5.1 What is the SIMATIC ET 200AL distributed I/O system? 40
5.2 What are fail-safe automation systems and fail-safe modules? 43
5.3 Components 45

6 Application planning 47
6.1 Hardware configuration 47
6.2 Configuration variants with ET-Connection 48
6.2.1 ET 200AL with ET-Connection 48
6.2.2 Hybrid configuration ET 200AL/ET 200SP with ET-Connection 50

7 Mounting 52
7.1 Basics 52
7.2 Mounting modules 53

8 Connecting 57
8.1 Rules and regulations for operation 57

8.2 Additional rules and regulations for the operation of the ET 200AL with fail-safe modules 60
8.2.1 Safety extra-low-voltage (SELV, PELV) for fail-safe modules 60
8.2.2 Requirements for sensors and actuators for fail-safe modules 61
8.2.3 Crosstalk of digital input/output signals 62
8.3 Operation of the ET 200AL on grounded/non-grounded infeed 63
8.4 Electrical configuration of the ET 200AL 66
8.5 Connecting ET 200AL to functional earth 70
8.5.1 Mounting ET 200AL modules on conductive substrate 71
8.5.2 Mounting ET 200AL modules on non-conductive substrate 72
8.6 Connecting cables for ET 200AL 74
8.7 Wiring 75
8.8 ET 200AL marking 80
8.8.1 Factory markings 80
8.8.2 Optional markings 81
8.8.3 Mounting identification labels 82

9 Configuring 83

10 Configuration control (option handling) 89

10.1 Configuration control 89
10.2 Configuring 91
10.3 Creating the control data record 93
10.3.1 Introduction 93
10.3.2 Control data record for the ET 200AL distributed I/O system 95
10.3.3 Feedback data record at the ET200AL distributed I/O system 97
10.3.4 Example of a configuration control 98
10.4 Transferring the control data record in the user program of the CPU 101
10.5 Behavior during operation 103

11 Commissioning 104

11.1 PROFINET IO 104
11.1.1 Commissioning ET 200AL on PROFINET IO 104
11.1.2 Startup on PROFINET IO 106
11.1.3 PROFIenergy 108
11.2 EtherNet/IP 109
11.2.1 Commissioning the ET 200AL on EtherNet/IP 109
11.2.2 Startup on EtherNet/IP 110
11.3 Modbus TCP 112
11.3.1 Commissioning the ET 200AL on Modbus TCP 112
11.3.2 Startup on Modbus TCP 113
11.4 PROFIBUS DP 115
11.4.1 Commissioning ET 200AL on PROFIBUS DP 115
11.4.2 Startup on PROFIBUS DP 116

11.5 Identification and maintenance data ... 118
11.5.1 Reading out and entering I&M data ... 118
11.5.2 Data record structure for I&M data ... 119

12 Maintenance ... 122

12.1 Replacing modules ... 122
12.2 Firmware update ... 124
12.3 Resetting interface module to factory settings ... 125
12.4 Reactions to errors of the F module ... 127
12.5 Cleaning modules ... 129

13 Technical specifications ... 130

13.1 Marks and approvals ... 130
13.2 Certificates ... 133
13.3 Standards and requirements ... 133
13.4 Electromagnetic compatibility ... 135
13.5 Transport and storage conditions ... 137
13.6 Mechanical and climatic ambient conditions ... 138
13.7 Details on insulation, protection class, degree of protection and rated voltage ... 139

A Safety-related shutdown of ET200AL standard modules ... 141

B Dimension drawings ... 144

C Accessories/spare parts ... 145

C.1 Accessories/spare parts ... 145
C.2 Cables ... 149
C.4 Pin assignment and core color ... 160

Glossary ... 162

Index ... 172

Introduction 1

1.1 Introduction

Purpose of the documentation

This documentation provides you with important information on how to configure, install, wire and commission the SIMATIC ET 200AL distributed I/O system.

Basic knowledge required

A basic knowledge of automation technology is required to understand the documentation.

Scope of the documentation

This documentation is valid for the SIMATIC ET 200AL distributed I/O system.

Conventions

Observe the notes labeled as follows:

NOTE

A note contains important information on the product described in the documentation and on the handling of the product to which particular attention should be paid.

Standards

You can find a dated reference to the respective standards or the EC Declaration of Conformity on the Internet (https://support.industry.siemens.com/cs/ww/en/ps/14245/cert?ct=444&ci=526).

Special information

NOTE

Important note for maintaining the operational safety of your plant

Plants with safety-related features are subject to special operational safety requirements on the part of the operator. The supplier is also obliged to comply with special product monitoring measures. For this reason, we inform you in personal notifications about product developments and features that are (or could be) relevant to the operation of plants from a safety perspective.

You should subscribe to the corresponding notifications in order to obtain the latest information and to allow you to make any necessary modifications to your system.

Log onto Industry Online Support. Follow the links below and click on "Email on update" on the right-hand side in each case:

- SIMATIC S7-300/S7-300F (https://support.industry.siemens.com/cs/ww/en/ps/13751)
- SIMATIC S7-400/S7-400H/S7-400F/FH (https://support.industry.siemens.com/cs/ww/en/ps/13828)
- SIMATIC WinAC RTX (F) (https://support.industry.siemens.com/cs/ww/en/ps/13915)
- SIMATIC S7-1500/SIMATIC S7-1500F (https://support.industry.siemens.com/cs/ww/en/ps/13716)
- SIMATIC S7-1200/SIMATIC S7-1200F (https://support.industry.siemens.com/cs/ww/en/ps/13683)
- Distributed I/O (https://support.industry.siemens.com/cs/ww/en/ps/14029)
- STEP 7 (TIA Portal) (https://support.industry.siemens.com/cs/ww/en/ps/14667)

NOTE

When using F-CPUs in safety mode and fail-safe modules, note the description of the fail-safe system SIMATIC Safety Programming and Operating Manual SIMATIC Safety - Configuring and Programming (https://support.industry.siemens.com/cs/ww/de/view/54110126/en).

1.2 Siemens Industry Online Support

You can find current information on the following topics quickly and easily here:

- **Product support**
  All the information and extensive know-how on your product, technical specifications, FAQs, certificates, downloads, and manuals.
- **Application examples**
  Tools and examples to solve your automation tasks – as well as function blocks, performance information and videos.
- **Services**
  Information about Industry Services, Field Services, Technical Support, spare parts and training offers.
- **Forums**
  For answers and solutions concerning automation technology.
- **mySupport**
  Your personal working area in Industry Online Support for messages, support queries, and configurable documents.

This information is provided by the Siemens Industry Online Support in the Internet (https://www.siemens.com/automation/service&support).

1.3 Industry Mall

The Industry Mall is the catalog and order system of Siemens AG for automation and drive solutions on the basis of Totally Integrated Automation (TIA) and Totally Integrated Power (TIP).

You can find catalogs for all automation and drive products on the Internet.

See also

Industry Mall (https://mall.industry.siemens.com)

1.4 ET 200AL Guide

1.4.1 Information classes ET 200AL

The documentation for the SIMATIC ET 200AL distributed I/O system is arranged into three areas.
This arrangement enables you to access the specific content you require.
You can download the documentation free of charge from the Internet.
(https://support.industry.siemens.com/cs/ww/en/view/109742667)

Basic information

The System Manual describes in detail the configuration, installation, wiring and commissioning of the SIMATIC ET 200AL distributed I/O system.
The STEP 7 online help supports you in the configuration and programming.
Examples:

- ET 200AL System Manual
- STEP 7 Professional
- Product information

Device information

Equipment manuals contain a compact description of the module-specific information, such as properties, wiring diagrams, characteristics and technical specifications.
Examples:

- Equipment Manuals Interface Modules
- Equipment Manuals Digital Modules
- Equipment Manuals Analog Modules
- Equipment Manuals Communications Modules

General information

The function manuals contain detailed descriptions on general topics relating to the SIMATIC ET 200AL distributed I/O system.
Examples:

- Function Manual ET 200AL/ET 200SP Mixed Configuration
- Function Manual Diagnostics
- Function Manual Communication
- PROFINET Function Manual
- PROFIBUS Function Manual
- Function Manual Designing Interference-free Controllers

Manual Collection ET 200AL

The Manual Collection contains the complete documentation on the SIMATIC ET 200AL distributed I/O system gathered together in one file.
You can find the Manual Collection on the Internet.
(https://support.industry.siemens.com/cs/ww/en/view/95242965)

1.4.2 Basic tools

Tools

The tools described below support you in all steps: from planning, over commissioning, all the way to analysis of your system.

TIA Selection Tool

The TIA Selection Tool tool supports you in the selection, configuration, and ordering of devices for Totally Integrated Automation (TIA).
As successor of the SIMATIC Selection Tools , the TIA Selection Tool assembles the already known configurators for automation technology into a single tool.
With the TIA Selection Tool , you can generate a complete order list from your product selection or product configuration.
You can find the TIA Selection Tool on the Internet.
(https://support.industry.siemens.com/cs/ww/en/view/109767888)

SIMATIC Automation Tool

You can use the SIMATIC Automation Tool to perform commissioning and maintenance activities on various SIMATIC S7 stations as bulk operations independent of TIA Portal.
The SIMATIC Automation Tool offers a wide range of functions:

- Scanning of a PROFINET/Ethernet system network and identification of all connected CPUs
- Assignment of addresses (IP, subnet, Gateway) and device name (PROFINET device) to a CPU
- Transfer of the date and the programming device/PC time converted to UTC time to the module
- Program download to CPU
- RUN/STOP mode switchover
- CPU localization through LED flashing
- Reading out of CPU error information
- Reading the CPU diagnostic buffer
- Reset to factory settings
- Firmware update of the CPU and connected modules

You can find the SIMATIC Automation Tool on the Internet.
(https://support.industry.siemens.com/cs/ww/en/view/98161300)

PRONETA

SIEMENS PRONETA (PROFINET network analysis) is a commissioning and diagnostic tool for PROFINET networks. PRONETA Basic has two core functions:

- In the network analysis, you get an overview of the PROFINET topology. Compare a real configuration with a reference installation or make simple parameter changes, e.g. to the names and IP addresses of the devices.
- The "IO test" is a simple and rapid test of the wiring and the module configuration of a plant, including documentation of the test results.

You can find SIEMENS PRONETA Basic on the Internet:
(https://support.industry.siemens.com/cs/ww/en/view/67460624)

SIEMENS PRONETA Professional is a licensed product that offers you additional functions. It offers you simple asset management in PROFINET networks and supports operators of automation systems in automatic data collection/acquisition of the components used through various functions:

- The user interface (API) offers an access point to the automation cell to automate the scan functions using MQTT or a command line.
- With PROFIenergy diagnostics, you can quickly detect the current pause mode or the readiness for operation of devices that support PROFIenergy and change these as needed.
- The data record wizard supports PROFINET developers in reading and writing acyclic PROFINET data records quickly and easily without PLC and engineering.

You can find SIEMENS PRONETA Professional on the Internet.
(https://www.siemens.com/proneta-professional)

SINETPLAN

SINETPLAN, the Siemens Network Planner, supports you in planning automation systems and networks based on PROFINET. The tool facilitates professional and predictive dimensioning of your PROFINET installation as early as in the planning stage. In addition, SINETPLAN supports you during network optimization and helps you to exploit network resources optimally and to plan reserves. This helps to prevent problems in commissioning or failures during productive operation even in advance of a planned operation. This increases the availability of the production plant and helps improve operational safety.

The advantages at a glance

- Network optimization thanks to port-specific calculation of the network load
- Increased production availability thanks to online scan and verification of existing systems
- Transparency before commissioning through importing and simulation of existing STEP 7 projects
- Efficiency through securing existing investments in the long term and the optimal use of resources

You can find SINETPLAN on the Internet
(https://new.siemens.com/global/en/products/automation/industrial-communication/profinet/sinetplan.html).

1.4.3 S7 Failsafe Configuration Tool (S7-FCT)

SIMATIC S7-FCT

Failsafe Configuration Tool (FCT) enables you to GSD configure the following devices in third-party engineering systems:

- Selected, functionally fail-safe SIMATIC I/O devices
- Functionally fail-safe SIRIUS ACT PROFINET interfaces

The engineering system must meet the following requirements for this:

- Support of the CPD system integration acc. to "PROFIsafe - Profile for Safety Technology on PROFIBUS DP and PROFINET IO"
- TCI implementation to Conformance Class C3

Additional information on S7-FCT can be found on the Internet (https://support.industry.siemens.com/cs/ww/en/view/109762827).

1.4.4 SIMATIC Technical Documentation

Additional SIMATIC documents will complete your information. You can find these documents and their use at the following links and QR codes.
The Industry Online Support gives you the option to get information on all topics. Application examples support you in solving your automation tasks.

Overview of the SIMATIC Technical Documentation

Here you will find an overview of the SIMATIC documentation available in Siemens Industry Online Support:

Industry Online Support International (https://support.industry.siemens.com/cs/ww/en/view/109742705)

Watch this short video to find out where you can find the overview directly in Siemens Industry Online Support and how to use Siemens Industry Online Support on your mobile device:

Quick introduction to the technical documentation of automation products per video (https://support.industry.siemens.com/cs/us/en/view/109780491)

YouTube video: Siemens Automation Products - Technical Documentation at a Glance (https://youtu.be/TwLSxxRQQsA)

Retention of the documentation

Retain the documentation for later use.
For documentation provided in digital form:

1. Download the associated documentation after receiving your product and before initial installation/commissioning. Use the following download options:
   - Industry Online Support International: (https://support.industry.siemens.com)
     The article number is used to assign the documentation to the product. The article number is specified on the product and on the packaging label. Products with new, non-compatible functions are provided with a new article number and documentation.
   - ID link:
     Your product may have an ID link. The ID link is a QR code with a frame and a black frame corner at the bottom right. The ID link takes you to the digital nameplate of your product. Scan the QR code on the product or on the packaging label with a smartphone camera, barcode scanner, or reader app. Call up the ID link.
2. Retain this version of the documentation.

Updating the documentation

The documentation of the product is updated in digital form. In particular in the case of function extensions, the new performance features are provided in an updated version.

1. Download the current version as described above via the Industry Online Support or the ID link.
2. Also retain this version of the documentation.

mySupport

With "mySupport" you can get the most out of your Industry Online Support.

Registration	You must register once to use the full functionality of "mySupport". After registration, you can create filters, favorites and tabs in your personal workspace.
Support requests	Your data is already filled out in support requests, and you can get an overview of your current requests at any time.
Documentation	In the Documentation area you can build your personal library.
Favorites	You can use the "Add to mySupport favorites" to flag especially interesting or frequently needed content. Under "Favorites", you will find a list of your flagged entries.
Recently viewed articles	The most recently viewed pages in mySupport are available under "Recently viewed articles".
CAx data	The CAx data area gives you access to the latest product data for your CAx or CAe system. You configure your own download package with a few clicks: • Product images, 2D dimension drawings, 3D models, internal circuit diagrams, EPLAN macro files • Manuals, characteristics, operating manuals, certificates • Product master data

You can find "mySupport" on the Internet. (https://support.industry.siemens.com/My/ww/en)

Application examples

The application examples support you with various tools and examples for solving your automation tasks. Solutions are shown in interplay with multiple components in the system - separated from the focus on individual products.
You can find the application examples on the Internet.
(https://support.industry.siemens.com/cs/ww/en/ps/ae)

Safety instructions 2

2.1 Warnings in this document

You can find explanations of the warnings used in this document in the "Legal information" section.

2.2 Safety-related symbols for IP65/IP67 modules

The following table contains an explanation of the symbols located on your IP65/67 modules, their packaging or in the accompanying documentation.

Symbol	Meaning
	General warning sign **Caution/Notice** You must read the product documentation. The product documentation contains information about the type of potential hazard and enables you to recognize risks and implement countermeasures.
ONLY EX MODULES	The assigned safety symbols apply to devices **with Ex approval**. You must read the product documentation. The product documentation contains information about the type of potential hazard and enables you to recognize risks and implement countermeasures.
	Read the information provided by the product documentation. ISO 7010 M002
	Ensure the device is only installed by an electrically skilled person. IEC 60417 No. 6182
CABLE SPEC.	Note that connected mains lines must be designed according to the expected minimum and maximum ambient temperature.
EMC	Note that the device must be constructed and connected in accordance with EMC regulations.

Symbol	Meaning
230V MODULES	Note that a 230 V device can be exposed to electrical voltages which can be dangerous. ANSI Z535.2
24V MODULES	Note that a device of Protection Class III may only be supplied with a protective low voltage according to the standard SELV/PELV. IEC 60417-1-5180 "Class III equipment"
INDOOR USE ONLY INDUSTRIAL USE ONLY	Be aware that the device is only approved for the industrial field and only for indoor use.

2.3 Intended use

The system is used to control machines and plants.
Intended use also includes observance of this documentation, in particular the safety instructions and conditions of use. See section Technical specifications (Page 130).

2.4 Changes to the device and spare parts

Modifications to the module may affect the safety and the function of the module:

- Do not make any changes or attachments to the module.
- Do not remove or paste over safety instructions on the module.
- Only use original spare parts and accessories.

2.5 Target group and personnel qualifications

All persons working with this module require the following knowledge:

- Contents of this document as well as contents of the enclosed documents.
- Handling the module (after instruction)
- Relevant standards and regulations
- Accident prevention regulations

The following activities are reserved for specially qualified personnel:

Working on electrical parts

Work on electrical parts may only be performed by the following persons:

- Qualified electricians
- Persons trained in electrical engineering under the direction and supervision of qualified personnel.

Commissioning and configuration

Commissioning and configuration requires general knowledge in the field of automation technology.

2.6 Personal protective equipment

The personal protective equipment depends on the activity and is determined by the operator. To avoid material damage during packing, unpacking and installation activities we recommend:

- ESD wrist strap
- ESD shoes

2.7 Working on electrical parts

Only work on electrical parts if you are a qualified specialist (see section Target group and personnel qualifications (Page 19)).

- Always observe the country-specific safety rules.
- Notify all those who will be affected by the procedure.
- Follow the 5 safety rules according to DIN EN 50110-1 (VDE 0105-1):

1. Disconnect
2. Secure to prevent reconnection
3. Verify safe isolation from the supply (all poles)
4. Ground and short-circuit
5. Erect barriers around or cover adjacent live parts

After completing work:

- Restore operational readiness in reverse order.

2.8 Residual risks

Despite all the technical and procedural risk reductions that have been carried out, not all dangers can be avoided. The following sections describe these residual risks and measures to avoid them.

2.8.1 Live parts

Electrocution on contact with live parts leads to life-threatening injuries (death).

Operation

- Do not open the module.
- Do not use damaged modules.
- Pull the plug and not the cable.

Installation and connection

- Only work on electrical parts if you are a qualified specialist (see section Target group and personnel qualifications (Page 19)).
- Adhere to the protective measures for safe working on electrical parts (see section Working on electrical parts (Page 20))
- Fuse the connection cables according to the current-carrying capacity of the cable used, taking into account the applicable standards.
- Ground the module according to regulations.
- For the 24 V DC supply (SELV/PELV), only use power supply units that provide safe electrical extra-low voltage in accordance with IEC 61131-2 or IEC 61010-2-201.

Maintenance

- Only work on electrical parts if you are a qualified specialist (see section Target group and personnel qualifications (Page 19)).
- Adhere to the protective measures for safe working on electrical parts (see section Working on electrical parts (Page 20)).

2.8.2 Conductive pollution

Electrocution during transmission of electrical energy via conductive contamination to the body leads to life-threatening injuries (death).

- Seal unused connections with a suitable and approved sealing cap.
- Keep the module free from conductive pollution.

2.8.3 Overheating

Smoke development and fire due to overheating of module and cables result in burns and life-threatening injuries (death).
To avoid overheating:

- Ensure the correct installation position.
- Ensure sufficient air supply (e.g. maintain mounting clearances).
- Only use undamaged cables.

Installation and connection

- Follow the instructions for the mounting position.
- Adhere to the specified ventilation clearances.
- Fuse the connecting cables according to the cable cross-section.

Maintenance

- Check plug-in connections and cables regularly for damage.

2.8.4 Uncontrolled movements

Uncontrolled movements of driven machine or system parts during commissioning, operation, maintenance and repair.

- Follow the safety instructions described in the function manuals.

2.8.5 Unsafe operating states

Unsafe operating states may result in personal injury of unknown extent.
The following factors can be triggers:

- Manipulation of the software, e.g. viruses, trojans or worms.

Manipulation of the software, e.g. viruses, trojans or worms.

- Adhere to the protective measures against tampering with the software (see section Industrial cybersecurity (Page 24)).
- Perform available updates in a timely manner.
- Protect files stored on removable media from malware with appropriate protective measures, e.g. virus scanner.
- Set up access protection for the CPU.

2.9 Behavior in case of emergency

- Force EMERGENCY OFF

When the safe operating state has been restored:

- Unlock the EMERGENCY OFF mechanism.
- The person responsible for the system ensures that the system starts up in a controlled and defined manner.

2.10 Material damage

2.10.1 Transport and storage

- Only pack, store, transport and ship electronic components, modules or devices in the original product packaging or in other suitable materials, e.g. conductive foam rubber or aluminum foil.
- Observe the limits during transport and storage. See Technical specifications (Page 130) section.

2.10.2 Installation and connection

- We recommend touching components, modules and devices only if they are grounded by one of the following measures:
  - With an ESD wrist strap.
  - With ESD shoes or ESD grounding strips in ESD areas with conductive flooring.
- Place electronic components, modules and devices only on conductive surfaces (e.g. tables with ESD coating, conductive ESD plastic foam, ESD packing bags, ESD transport containers).
- Ensure that there is sufficient overvoltage protection.

Installation/disassembly with voltage switched on

- Refer to the Mounting (Page 52) section
- Read the Replacing modules (Page 122) section.
- Observe the special conditions for hazardous areas in the section AUTOHOTSPOT.

Industrial cybersecurity 3

Due to the digitalization and increasing networking of machines and industrial plants, the risk of cyber attacks is also growing. Appropriate protective measures are therefore mandatory, particularly in the case of critical infrastructure facilities.
In the first part of this section you will find basic information on the subject of industrial cybersecurity. In the following sections, measures for the entire system and individual components are recommended to protect against manipulation and unwanted access.

NOTE

Security-relevant changes to software or devices are documented in the section New properties/functions (Page 38).

3.1 Cybersecurity information

Siemens provides products and solutions with industrial cybersecurity functions that support the secure operation of plants, systems, machines, and networks.
In order to protect plants, systems, machines, and networks against cyber threats, it is necessary to implement – and continuously maintain – a holistic, state-of-the-art industrial cybersecurity concept. Siemens' products and solutions constitute one element of such a concept.
Customers are responsible for preventing unauthorized access to their plants, systems, machines and networks. Such systems, machines and components should only be connected to an enterprise network or the internet if and to the extent such a connection is necessary and only when appropriate security measures (e.g. firewalls and/or network segmentation) are in place.
For more information on protective industrial cybersecurity measures for implementation, please visit (https://www.siemens.com/global/en/products/automation/topic-areas/industrial-cybersecurity.html).
Siemens' products and solutions undergo continuous development to make them more secure. Siemens strongly recommends that product updates are applied as soon as they are available and that the latest product versions are used. Use of product versions that are no longer supported, and failure to apply the latest updates may increase customers' exposure to cyber threats.
To stay informed about product updates at all times, subscribe to the Siemens Industrial Cybersecurity RSS Feed under
(https://new.siemens.com/global/en/products/services/cert.html).

3.2 Security update notification

Read the special information on maintaining the operational safety of your plant in the Introduction (Page 9) section.

Set up notification of security updates

To receive notifications about security updates, proceed as follows:

1. Register with mySiePortal (https://sieportal.siemens.com/en-ww/home).
2. Enter the keyword "Security" in the search engine.
3. Choose the "Search in Knowledge base" option.
4. Select the "Other types" option from the filter menu for "Type," and then choose "Download" and "Product note".
5. Select the document from which you want to create notifications.
6. For information on setting up email notification, refer to the video Custom notifications and filters (https://cache.industry.siemens.com/dl/dl-media/691/90000691/att_1036866/v1/How-to_Videos-SIOS_EN/story_html5.html?lang=en).

3.3 Basic information on industrial cybersecurity

3.3.1 Definition of industrial cybersecurity

Industrial cybersecurity is generally understood to mean all measures to protect against the following threats:

- Loss of confidentiality due to unauthorized access to data
- Loss of integrity due to manipulation of data
- Loss of availability (e.g. due to the destruction of data or denial of service (DoS))

3.3.2 Objectives of industrial cybersecurity

The objectives of industrial cybersecurity are:

- Trouble-free operation and ensuring the availability of industrial plants and production processes
- Preventing threats to people and production from cybersecurity attacks
- Protection of industrial communication against espionage and manipulation
- Protection of industrial automation systems and components against unauthorized access and data loss
- Provision of a practical and cost-effective concept for securing existing plants and devices without their own security functions
- Use of existing, open, and proven industrial security standards
- Compliance with legal requirements

An optimized and adapted security concept applies to automation and drive technology. The security measures must not impede or endanger production.

3.4 Integrated security concept and security strategies

3.4.1 Comprehensive security concept "Defense in Depth"

With Defense in Depth, Siemens provides a multi-layer security concept that offers industrial plants comprehensive and far-reaching protection in accordance with the recommendations of the IEC 62443 international standard.
Productivity and know-how are protected on 3 levels:

Plant security
Plant security uses various methods to secure the physical access of people to critical components. This starts with classic building access and extends to securing sensitive areas using access control (for example, code card, iris scan, fingerprint or access code).

Network security
Automation networks must be protected against unauthorized access. This is achieved through security measures on the product, but also those in the product-related environment.

System integrity
Targeted measures must be taken to protect existing know-how or to prevent unauthorized access to automation processes.

You can find more information on the topics of Defense in Depth, plant security, network security, and system integrity on the SIEMENS Industrial cybersecurity (https://www.siemens.com/us/en/company/topic-areas/cybersecurity/industrial-security.html) Web page.
You can also visit the download center (https://www.siemens.com/us/en/company/topic-areas/cybersecurity/industrial-security/downloads.html) to obtain more information on the topic of industrial cybersecurity. The "Operational Guidelines", for example, provide recommendations on basic security measures for secure machine and plant operation in an industrial environment.

3.4.2 Security management

The ISO 27001 and IEC 62443 standards call for a comprehensive approach in IT and OT to protect against cyber attacks.

Responsibility for cybersecurity and IT security

Every operator of machinery and equipment is responsible for:

- Defining cybersecurity and IT security as an important criterion in the procurement and selection of machines and software applications.
- Use of suitable measures to protect production resources, data, and communication from manipulation and theft
- Providing all necessary resources and training to employees to fully support these goals

For this purpose, suitable measures must be selected after a risk assessment and a cost-benefit analysis in order to protect material and intellectual property and prevent damage from occurring. These measures should be integrated into corporate processes and procedures, evaluated regularly, and firmly anchored in the corporate culture. In addition to protecting intellectual property, the protection of personal data must be ensured at all organizational units and levels.

Siemens will provide you with information and support. Subscribe to the RSS feed (https://www.siemens.com/cert) for vulnerabilities. Register with mySiePortal (https://sieportal.siemens.com/en-ww/home) and create filters to be notified when important information is published. Consider using Siemens Cybersecurity Services.

Responsibility in the digital supply chain

Cybersecurity should play a critical role in the evaluation and procurement process. The entire life cycle of a product should be considered to ensure protection against current and future risks. These include, for example, security updates throughout the product life cycle, including guidelines for secure disposal of the product.

Siemens plans and announces the provision of security updates, total discontinuation of products and cancellation of product support.

Employee awareness

Regular training in cybersecurity and continuous testing of training success are essential so that cybersecurity measures are internalized in processes and work instructions. This involves general training in the use of software and IT hardware for company communication and as work equipment e.g.:

- Secure handling of USB devices
- Encrypted communication
- Use of VPN
- Rules for passwords and use of access
- Setting up two-factor authentication
- Educating employees about the dangers posed by malware, phishing, social engineering and other factors

Furthermore, if applicable, production equipment and software training should always include the topic of cybersecurity.

Maintaining the security concept through updates

Keeping software up-to-date is essential, for example, to benefit from the following measures:

- Implementation of new security strategies, protocols and techniques
- Closing of security vulnerabilities
- Elimination of security vulnerabilities

To this end, it is necessary to keep a constant eye on the further development of protective measures and, if necessary, the expansion of requirements.

It is recommended to:

- Set up notifications for (security) updates
- Subscribe to information on vulnerabilities
- Monitor and implement the further development of the technology, especially in the area of cybersecurity

In short: Always keep technology and knowledge up to date.

Consideration of the risks posed by cyber attacks in the Threat and Risk Assessment (TRA)

Make an inventory of all software, hardware, and infrastructure devices, in order to identify risks to the location or organization. Incident response procedures must be incorporated into all IT and manufacturing processes. The choice of risk mitigation measures should be based on a cost-benefit analysis and classification of risks. This is followed by the introduction of cybersecurity rules and procedures and the training of personnel.

Living the concept

Technical solutions alone are not sufficient to effectively counter threats.

Cybersecurity must be part of the corporate culture and process landscape and must be internalized and lived by all employees.

Continuously monitoring the security situation

Continuous monitoring of the cybersecurity situation through:

- Setting anomaly references and creating allow and deny lists based on normal network communication and production machine behavior
- Establishment of an intrusion detection system (IDS) that generates alarms when unusual behavior occurs in the network
- Introduction of a Security Incident and Event Management (SIEM) system to collect, analyze, and evaluate events in real time to enable early countermeasures
- Measures regarding network security: e.g. network segmentation, firewalls, VPN, DMZ (demilitarized zones)

3.5 Operational application environment and security assumptions

3.5.1 Intended use

SIMATIC products are intended for use in industry. If you plan to use the product in a different environment, check the conditions required for such use.

The product may be operated only by personnel qualified for the specific task in accordance with the relevant documentation, in particular its warning notices and safety information. Qualified personnel are those who, based on their training and experience, are capable of identifying risks and avoiding potential hazards when working with these products.

Operational reliability and intended use

Read the "Special information" in the Introduction (Page 9) section.

Area of application

Refer to the "Application area" section in the System overview (Page 39) chapter.

3.5.2 Requirements for the operational application environment and security assumptions

Siemens recommends the following security measures:

- Conducting a threat and risk assessment (as part of security management)
- Network security concepts
  - Network segmentation
  - Asset and network management
  - Network protection
  - Remote access
- Access control concepts (utilizing access control systems)
  - Physical protection
  - Physical corporate security
  - Physical product security

Threat and Risk Assessment

Vulnerabilities and risks are identified, and countermeasures are proposed to ensure the security of the system, networks, and data.

Network security concepts

You can find information on network security in the whitepaper "Industrial Network Security Architecture", available at the Download Center (https://www.siemens.com/us/en/company/topic-areas/cybersecurity/industrial-security/downloads.html) on the Industrial Cybersecurity (https://www.siemens.com/us/en/company/topic-areas/cybersecurity/industrial-security.html) website.

Access control concepts

Physical protection

In addition to closing off and/or monitoring entire production facilities, it may be necessary to physically secure cabinets or even individual components such as circuit breakers.

Physical corporate security

Physical enterprise security can be ensured by the following measures:

- Closed off and monitored company premises
- Access control, locks/card readers, and/or security personnel
- Accompaniment of non-employees by company personnel
- Employees are trained on and embrace security processes within the company

Physical production security

The following measures can be included in assuring physical production security:

- Separate access control for critical areas, such as production zones.
- Installation of critical components in lockable cabinets/control rooms with monitoring and alarm capabilities. The cabinets/control rooms must be secured with a cylinder lock. Do not use simple locks, such as universal, triangular/square, or double-bit locks.

- Radio field planning to limit WLAN coverage areas, preventing them from extending beyond defined zones (e.g. factory floor).
- Guidelines that prohibit the use of external data storage media (such as USB flash drives) and IT devices (such as laptops) classified as unsafe on systems.

3.6 Security properties of the devices

The security properties of the individual devices are listed in the Equipment Manuals.

3.7 Secure operation of the system

This section describes measures recommended by Siemens to protect your system from manipulation and unauthorized access.

3.7.1 Hardening measures

System hardening, simplify referred to as hardening, is the secure configuration of products or systems. The aim is to close security gaps and take various measures to reduce the attack surfaces for cyberattacks.

Measures for system hardening include, for example:

- Secure configuration in which only necessary software components and services are installed or activated for proper operation.
- Access control, by which restrictive user and rights management system is implemented.

3.7.2 Secure configuration

Secure configuration involves control over all software components, along with their interfaces, ports, and services.
Activated services and ports pose a risk.

- One possible risk is unauthorized access to the network.
- Another risk is unauthorized access to programs.

To minimize risks, only the necessary services should be activated for all automation components.

- Take all activated services (especially Web servers, FTP, remote maintenance etc.) into account in the security concept.
- Consider the default states of ports and services in your security concept.

You can find an overview of all ports and services used in the Communication function manual (https://support.industry.siemens.com/cs/ww/en/view/59192925).

3.7.3 Handling of sensitive data

When storing your security-relevant data on your PC, independently ensure secure data storage.

3.7.4 Regular firmware updates

NOTE

Outdated firmware versions might not be monitored for security vulnerabilities.

- Always keep your plant/products up to date to benefit from troubleshooting and to minimize potential risks.
- Use email notifications to be automatically informed about firmware updates.

There are two ways of being automatically informed about firmware updates:

- Use "Enable notification" and "Add to mySupport favorites" functions, see section Security update notification (Page 25) .
- Consult the firmware collection on SIOS. To do this, register in the download section on mySiePortal (https://sieportal.siemens.com/en-ww/home).

Also read the basic cybersecurity information in the Cybersecurity notes section.

For more information, see also the Firmware update (Page 124) section.

3.7.5 Notifications about security vulnerabilities (Siemens Security Advisories)

A vulnerability is a security vulnerability in information security. It can pose a threat as it provides intruders with the opportunity to access system resources and manipulate or steal data.

Siemens ProductCERT

If Siemens identifies or fixes security gaps (Vulnerabilities) in the products, this will be published in the Security Advisories.

You can find the documents for SIMATIC on the following Siemens AG Web page: Siemens ProductCERT and Siemens CERT (https://new.siemens.com/global/en/products/services/cert.html?s=SIMATIC#SecurityPublications)

Enter "SIMATIC" in the search box "Search Security Advisories".

On this page, you will also find all the required information on how to deal with vulnerabilities:

- Contact persons for matters related to vulnerabilities
- Options for automated notifications regarding vulnerabilities
- Notifications are also possible in CSAF format
- Option to subscribe to RSS feeds and newsletters

- List of all current vulnerabilities and detailed information such as:
  - Description
  - Classification according to Common Vulnerability Scoring System (CVSS)
  - Measures
  - Availability
  - Etc.
- Report possible vulnerabilities yourself at (https://new.siemens.com/global/en/products/services/cert.html#ContactInformation)

Set up an RSS feed to receive notifications about security-related topics.

3.7.6 Data backup

Secure your configuration and parameter settings so that you can quickly restore this data if needed.

3.7.7 Security checks

Security checks for data, files, and archives serve to ensure data integrity at the storage location and during file transmission, protecting against manipulation and transmission errors. This is often achieved using digital checksums that are provided alongside the data. Tools (such as SHA-256 or SHA-512) for calculating and verifying these checksums are provided in many systems and named according to their respective calculation methods.

- File Integrity Guidelines describe the prescribed procedure for integrity checks
- Integrity protection is a protection function for engineering data and firmware files
- Communication integrity means protecting communication against unauthorized manipulations to ensure high system availability. A central element in this regard is, for example, the use of digital checksums when accessing controllers. (Source: Industrial Cybersecurity website (https://www.siemens.com/us/en/company/topic-areas/cybersecurity/industrial-security.html))

3.7.8 Secure decommissioning

In the following section, you will find information on how to properly decommission individual components of your automation system. Decommissioning is necessary when the component has reached the end of its service life.

Decommissioning includes environmentally sound disposal and secure removal of all digital data of electronic components with storage medium.

3.7.8.1 Securely removing data

Before disposing of components of your automation system, you should securely delete all data from the storage media of these components. How to securely delete data from the devices so that it cannot be recovered is described below.

NOTICE
Data misuse resulting from non-secure deletion of data Incomplete or non-secure deletion of data from data memories can result in data misuse by third parties. For this reason, ensure secure deletion of data from all storage media used before disposing of the product.

Secure erasure of data from the interface module

With the following tools, you can securely erase the data from the interface module:

- STEP 7 < V19
- SIMATIC Automation Tool
- MultiFieldbus Configuration Tool (MFCT)
- PRONETA

Follow these steps in the order given:

1. Establish an online connection.
2. Open the Online and Diagnostics view of the IM (either from the project context or via "Accessible devices").
3. In the dialog box "Functions > Reset to factory settings", select the option "Delete I&M data" and then the "Reset" button.

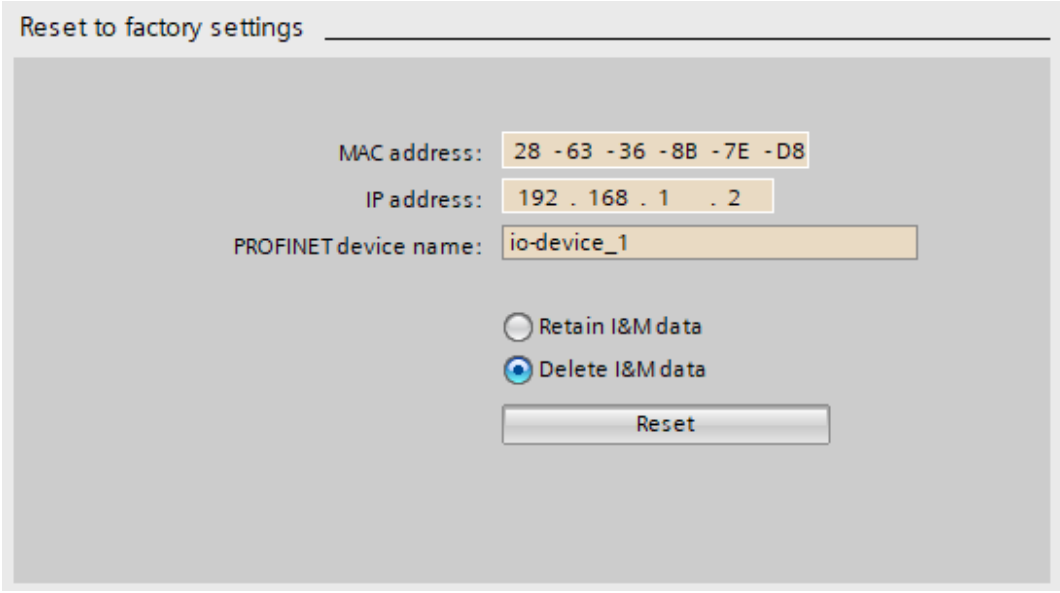

Figure 3-1 Resetting an interface module to factory settings

Result: All the data that was still in the data memories of the interface module was deleted. You can now dispose of the components.

For more information on resetting the interface module to factory settings, refer to the section Resetting an interface module to factory settings (Page 125).

NOTE

TIA Portal V19

Only the communication parameters will be securely deleted on "Reset to factory settings" with the "Delete I&M data" option enabled when you use TIA Portal V19.

Deleted communication parameters:

- IP address
- Device name
- PROFINET configuration data

If you want to securely remove all data, use one of the tools listed above for this purpose.

3.7.8.2 Recycling and disposal

For environmentally sustainable recycling and disposal of your old equipment, contact a certified electronic waste disposal service and dispose of the equipment according to the applicable regulations in your country.

3.8 Secure operation of the engineering software

For more information on secure operation of the engineering software, refer to the TIA Portal online help.

3.9 Secure operation of interface modules

Device-specific security information and instructions for interface modules can be found in the respective Equipment Manual.

3.9.1 Data integrity

Data integrity refers to the completeness and correctness (integrity) of data, which is an essential prerequisite for the proper functioning of systems.

Measures for data privacy, data consistency, and data security ensure that data used within devices cannot be damaged, altered (manipulated), or deleted during processing or transmission, and at the very least, any changes to the data are detected.

Data integrity for interface modules

To detect intentional or accidental changes to data within an interface module and its associated modules, the possibility of dynamic integrity checking is introduced for PROFINET interface modules.

The ability to detect integrity breaches enhances the resilience of the distributed I/O system.

Data integrity within a distributed I/O system is entirely covered within the interface module and does not pertain to other components of the automation system.

Principle

The interface module calculates checksums based on its used data and the supplied data from the associated modules, such as parameter settings, IP address, device name, MAC address and I&M data. The interface module stores the checksums in the I&M4 data area.

A CRC (Cyclic Redundancy Check) is always the same for a specific, unchanged memory content. When the memory content changes, the interface module (IM) calculates a different checksum for this content by reading and comparing the I&M4 data. By comparing with the initial CRC, you can determine whether the data in the memory has been modified or not:

- CRC stayed the same: No change in the data within this memory area of the interface module IM
- CRC changed: The data within this memory area of the IM was modified

Only you, as the user, know whether changes to the data of an interface module were intentional or not. If changes were not intentional, you can detect that the data of the interface module has been compromised through changed CRCs and respond accordingly.

I&M data

PROFINET devices provide Identification and Maintenance data (I&M data), which is a set of predefined data structures containing the internal module status. With this data, a module can be identified, its serial number can be determined, etc.

The CRC checksums are mapped in the maintenance data **I&M4** of the interface module.

NOTE

Requirements for calculating the CRCs

The CRCs via the memory contents of the interface module are calculated only when you request to read the I&M4 data.

The CRCs cover not only the interface module itself but can also take into consideration combined checksums from associated modules (refer to the section on the structure of the data record for I&M data). Process data is not included in the calculation of CRCs.

Example:

- You put your distributed I/O system into operation and read the CRC CHK_OVERALL with the value "0x55AAA678" ("16#55AAA678") from the interface module via the I&M4 data.
- As long as no changes have been made to the data of the interface module or the associated modules, each subsequent read will give the value "0x55AAA678" or "16#55AAA678".
- Once you read a different CRC CHK_OVERALL, for example, "0xCC9876FF", you will realize that there must have been changes to the data of the interface module or the associated modules.

The quality of the statement regarding the data integrity of the distributed I/O system improves with each module associated with the interface module that supports I&M4 data. Refer to the Equipment Manual of the respective module to find out if and from which firmware version the module supports I&M4 data.

You can find the structure of I&M data 0 to 4 in the section "Record structure for I&M data".

Spare parts scenario

The spare parts scenario is still ensured. This means that you can replace interface modules with the same article number. For the "new" interface module, the static data such as the serial number and MAC addresses will change. Note that this is why the replacement will be reflected in the changed identification data CHK_STATIC_LOCAL and consequently also in CHK_OVERALL.

More information on the spare parts scenario and compatibility can be found in the Equipment Manual of the interface module.

3.9.2 Signed firmware update

Signed firmware update

A signed firmware update ensures the authenticity and integrity of the firmware loaded onto a device.

It protects you against installing malicious firmware in case:

- Firmware was modified
- Firmware was downloaded from an incorrect internet source

Principle of signed firmware updates for interface modules

Firmware updates for interface modules starting from article number 6ES7157-1MA00-0AB0 include a digital signature. The digitally signed firmware update files are available for download on the Siemens Support Web page.

The interface module verifies the authenticity and integrity of the firmware update file before installation using the digital signature with standardized asymmetric cryptography methods. As a result, the interface module can detect a manipulated or corrupted firmware update file and reject it.

Note that the interface module performs the verification only after the complete firmware download has taken place.

Subsequently, a notification is sent to the firmware update tool regarding the success or failure of the signature verification.

You still have all the options for firmware updates, as described in the Firmware update section, when performing signed firmware updates for interface modules.

Diagnostics alarms and remedy

When performing a firmware update for an interface module with an established connection between the IM and CPU, there are the following options for notifications in the CPU's diagnostic buffer:

- Successful integrity check of the firmware for the interface module
- Rejection of non-secure firmware for the interface module

For more information, refer to the Channel Diagnostics table in the equipment manual of the interface module.

In case of firmware update rejection, proceed as follows:

1. Verify if the firmware update file you are using comes from a secure source.
2. Download the firmware again from the Siemens Support website.
3. Repeat the firmware update.

3.10 Secure operation of I/O modules

Device-specific security information and instructions for I/O modules can be found in the respective Equipment Manual.

3.11 Secure operation of the power supply modules

Device-specific security information and instructions for the power supply modules can be found in the respective Equipment Manual.

New properties/functions

4

What's new in Edition 11/2023 of the ET 200AL System Manual compared with Edition 12/2022?

What's new?		What are the customer benefits?	Where can I find the information?
New contents	General security instructions	The section contains a compilation of general security instructions for the ET 200AL distributed I/O system.	Section Safety instructions (Page 18)
	"Industrial Cybersecurity" section	Due to the digitalization and increasing networking of machines and industrial plants, the risk of cyber attacks is also growing. Appropriate protective measures are therefore mandatory, particularly in the case of critical infrastructure facilities. The section contains the following information: • Basic information on the subject of industrial cybersecurity • Measures to protect individual components and the entire system against manipulation and unwanted access.	Section Industrial cybersecurity (Page 24)
	Supplement IM 157-1 MF module	The MultiFieldbus interface module IM 157-1 MF	Starting with section System overview (Page 39)
Changed contents			

What's new in Edition 12/2022 of the ET 200AL System Manual compared with Edition 08/2021?

What's new?		What are the customer benefits?	Where can I find the information?
New contents	Technical specifications of the plug	The technical specifications of the plug-in connections are listed in the section.	Starting with section Connectors (Page 158)
Changed contents	Update of the section	The UKCA approval has been added.	Section AUTOHOTSPOT
	Update of the section	The table "Pulse-shaped disturbance variables" has been revised.	Section Electromagnetic compatibility (Page 135)

System overview

5

5.1 What is the SIMATIC ET 200AL distributed I/O system?

SIMATIC ET 200AL

The SIMATIC ET 200AL distributed I/O system is a scalable and highly flexible, distributed I/O system for connecting process signals to a higher-level control system with a field bus.
The MultiFieldbus (MF) supports the following communication protocols:

- PROFINET IO
- EtherNet/IP
- Modbus TCP

Customer benefits of the system

Easy to use

- Easy wiring thanks to color-coded connectors
- CAx compliant labeling of all interfaces
- Fast, convenient configuration and commissioning with STEP 7 (TIA Portal)
- Configuration customizing for future extension through integrated configurationcontrol

Energy efficiency

- PROFIenergy as integrated function

Compact design

- High IO configuration limits for module widths of 30 mm or 45 mm and up to 32 modules for each ET 200AL
- High degree of protection IP65/IP67
- Adequate for temperatures from -30 °C/-25 °C to +55 °C and accelera-tions up to 10g

Powerful technology

- Module with counting function
- Fail-safe modules

Flexible mounting

- Easy mounting in all mounting positions - even in small spaces
- Spatially separated mounting of the modules by means of a backplane bus designed as a cable(= ET Connection)
- Flexible connection to MultiFieldbus, PROFIBUS or integration in SIMATIC ET 200SP
- Integration of sensors and actuators through M8 and M12 connection technology

Communication standards

- PROFINET IO
- EtherNet/IP
- Modbus TCP
- PROFIBUS DP
- IO-Link
- PROFIsafe

Figure 5-1 ET 200AL benefits

Area of application

The SIMATIC ET 200AL distributed I/O system is especially well suited for use in tight spaces, moving applications and for assembly and handling technology. Thanks to its scalable construction, you have the option to precisely customize its configuration to your on site needs.
The SIMATIC ET 200AL distributed I/O system features degree of protection IP65/IP67. The I/O modules are suitable for distributed use indoors on a machine or assembly line.

Setup

The SIMATIC ET 200AL distributed I/O system is made up of the following components:

- Interface modules (MultiFieldbus/PROFINET/PROFIBUS)
- Digital and analog I/O modules
- Communications modules

After an interface module you can configure 2 lines (ET-Connection), each with 16 modules.
Alternatively, you can configure a line with 16 I/O modules on the SIMATIC ET 200SP distributed I/O system with BaseUnit BU-Send and the BusAdapter BA-Send 1xFC.
The ET-Connection backplane bus is designed as a cable. This allows you to create spatial distances of up to 15 m between the modules.

Configuration example

The figure below shows a configuration example of the SIMATIC ET 200AL distributed I/O system with a PROFINET interface module.

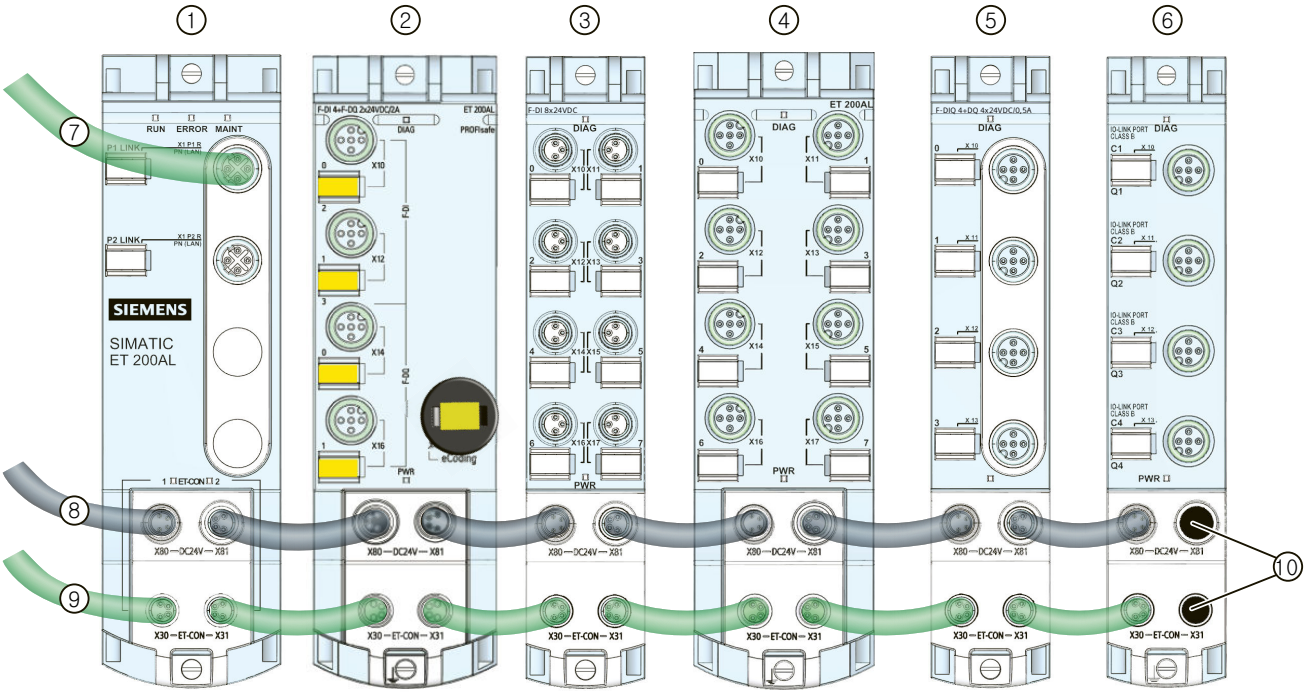

① Interface module (PROFINET)
② Fail-safe digital input / digital output module
③ Digital input/Digital output module
④ Digital output module
⑤ Analog input module
⑥ Communication module
⑦ PROFINET cable
⑧ Power supply cable
⑨ ET-Connection cable
⑩ Sealing caps

Figure 5-2 Configuration example of the ET 200AL

5.2 What are fail-safe automation systems and fail-safe modules?

Fail-safe automation systems

Fail-safe automation systems are mainly used in applications where failure could have consequences for the safety of people and/or the environment. Fail-safe systems are therefore intended to reduce hazards or failures that could cause physical damage. Their purpose is to ensure a tolerable level of risk.

F-systems are used to control processes and provide a safe operating state when faults are detected. Fault detection is ensured by a very high level of diagnostic coverage. When a fault is detected, appropriate actions are initiated to bring the affected application to a safe state.

F-systems offer improved fault detection and fault localization through detailed diagnostics and diagnostic messages. This is the most important difference between fail-safe systems and standard systems. The use of fail-safe systems should be considered for applications where hazards are inherent and can cause physical damage.

Safety Integrated

Safety Integrated is the integrated safety concept for automation and drive technology from Siemens.

Proven technologies and systems from automation technology are used for safety systems. Safety Integrated includes the complete safety sequence, ranging from sensor, actuator and fail-safe modules right through to the controller, including safety-related communication via standard fieldbuses. Drives and controllers handle safety tasks in addition to their actual functions.

Fail-safe modules

The key difference between fail-safe modules (F-modules) and standard modules is that they have an internal two-channel design. This means the two integrated processors monitor each other, automatically test the input and output circuits, and switch the fail-safe module to a safe state in the event of a fault.

The F-CPU communicates with a fail-safe module via the safety-related PROFIsafe bus profile.

Possible uses of ET 200AL with fail-safe modules

The use of ET 200AL with fail-safe modules makes it possible to replace conventional mounting technology in safety technology with PLC components. This also includes the replacement of switchgear for EMERGENCY STOP, safety door monitoring, ambidextrous operation, etc.

Fail-safe modules for ET 200AL are supported together with the STEP 7 Safety Advanced V17 or higher option package.

F-modules for ET 200AL can be used either with an ET 200AL PROFINET interface module (IM), a direct ET connection to an ET 200SP F-CPU or a direct ET connection to an ET 200SP IM (mixed configuration).

Use in SIMATIC Safety F-systems

The fail-safe ET 200AL modules can be used with STEP 7 Safety Advanced from V17 with PROFINET and direct ET connection configurations together with an F-CPU.
The fail-safe modules can only be used in safety mode. Fault safe and non-fault safe modules can be combined within one ET 200AL ET connection.

Achievable safety classes

The fail-safe modules are equipped with integrated safety functions for safety mode.
You can achieve the safety classes of the table below:

- With the appropriate parameter assignment of the safety functions in STEP 7
- With a specific combination of fail-safe and non-fail-safe I/O modules
- With a special arrangement and wiring of the sensors and actuators

Table 5-1 Safety classes that can be achieved with ET 200AL in safety mode

Safety class in safety mode		
According to IEC 61508	**According to ISO 13849-1**	
SIL2	Category 3	(PL) Performance Level d
SIL3	Category 3	(PL) Performance Level e
SIL3	Category 4	(PL) Performance Level e

WARNING

The safety performance of your installation depends on the design and ongoing maintenance of the individual complete safety function.

SIMATIC fail-safe CPUs and ET 200AL fail-safe modules have logic processing components with certified safety integrity levels, provided they are operated in accordance with classifications, specifications, and instructions.

Failure to adhere to this may cause damage or unpredictable operation, resulting in fatal or serious injury and/or property damage.

To achieve the level of safety you require, you need to select all components of your plant and construct and maintain them in accordance with accepted safety standards and practices.

5.3 Components

Components of the ET 200AL distributed I/O system

The following table shows and explains the function of the most important components of the ET 200AL distributed I/O system.

Table 5-2 Components of the ET 200AL distributed I/O system

Components	Function	View
Interface module for MultiFieldbus	• The interface module connects the distributed I/O system ET 200AL with one or more I/O controllers, scanners, Modbus clients • Exchanges data with the I/O modules via ET-Connection	
Interface module for PROFINET IO	• The interface module connects the ET 200AL distributed I/O system with the IO controller • Exchanges data with the I/O modules via ET-Connection	
Interface module for PROFIBUS DP	• The interface module connects the ET 200AL distributed I/O system with the DP master • Exchanges data with the I/O modules via ET-Connection	
I/O modules	• The I/O modules form the interface to the process • Recording and controlling the current process status via the connected sensors and actuators	
eCoding plug connector	Electronic coding element with an overwritable electronic memory for module-specific fail-safe address data (for example, the F-destination address)	
Y-cable	Y-cable connects multiple actuators or sensors to inputs or outputs. There are two types: • Y-cable: Connects inputs or outputs of the module to several actuators or sensors. • Inverted Y-cable: Connects several fail-safe inputs or outputs of the F-module with one or more sensors and actuators	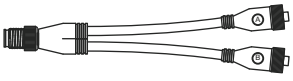
Identification labels	• The identification labels come with the module and can be machine printed • Can be ordered separately in white or yellow for fail-safe modules	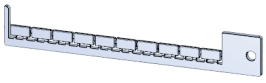

Components	Function	View
Bus cable and M8 connector for ET-Connection	The bus cable creates the bus connection between the modules	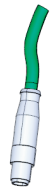
Power cable and M8 connector for power supply	The power cable provides power to the modules	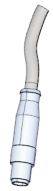
Stripping tool ET-Connection	The stripping tool is used to strip the ET-Connection bus cable	

Application planning

6

6.1 Hardware configuration

Mechanical maximum configuration

The following tables show the rules of the mechanical configuration. As soon as one of the following rules applies, the maximum configuration has been reached.

Table 6-1 Maximum mechanical configuration - on ET 200AL interface module

Properties	Rule (max.)	
	Interface modules as of firmware version V1.0.0	**Interface modules as of firmware version V1.0.1**
Number of ET 200AL I/O modules in the configuration	32	
Number of ET-Connection outlets	2	
Number of I/O modules per ET-Connection outlet	16	
Spatial extension per ET-Connection line	160 m	240 m
Cable length between the modules	10 m	15 m

Table 6-2 Maximum mechanical configuration - on ET 200SP with interface module

Properties	Rule (max.)	
	Interface modules as of firmware version V3.0.0	**Interface modules as of firmware version V3.3.0**
Number of ET 200AL I/O modules in the configuration	16	
Number of ET-Connection outlets	1	
Spatial extension ET-Connection line	160 m	240 m
Cable length between the modules	10 m	15 m

Table 6-3 Maximum mechanical configuration - on ET 200SP with CPU

Properties	Rule (max.)
	CPUs with firmware version as of V2.0.0
Number of ET 200AL I/O modules in the configuration	16
Number of ET-Connection outlets	1
Spatial extension ET-Connection line	240 m
Cable length between the modules	15 m

Electrical maximum configuration

The number of usable I/O modules of a potential group is limited by the following points:

- Power requirements of the I/O modules
- Power requirements of the components supplied via these I/O modules

The maximum infeed current of the I/O modules is 4 A with 1L+ supply voltage (non-switched) and 2L+ load voltage (switched). When the maximum infeed current has been reached, you must open a new potential group.

Reference

You will find more information in the section Connecting cables for ET 200AL (Page 74).

6.2 Configuration variants with ET-Connection

6.2.1 ET 200AL with ET-Connection

Every ET 200AL interface module has 2 ET-Connection connections
From every ET-Connection, you have the option to set up a line with a maximum of 16 ET 200AL I/O modules.

ET-Connection1

The figure below shows a configuration in the IP65/IP67 environment with one ET-Connection line.

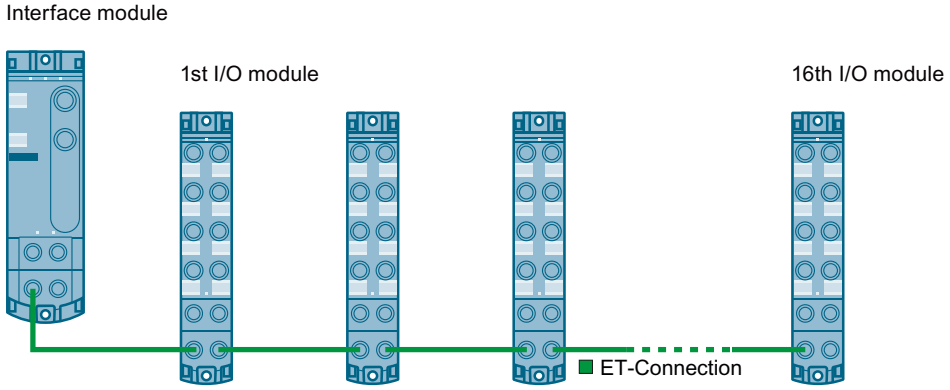

Figure 6-1 ET 200AL with ET-Connection1

ET-Connection1 and ET-Connection2

The figure below shows a configuration in the IP65/IP67 environment with two ET-Connection lines

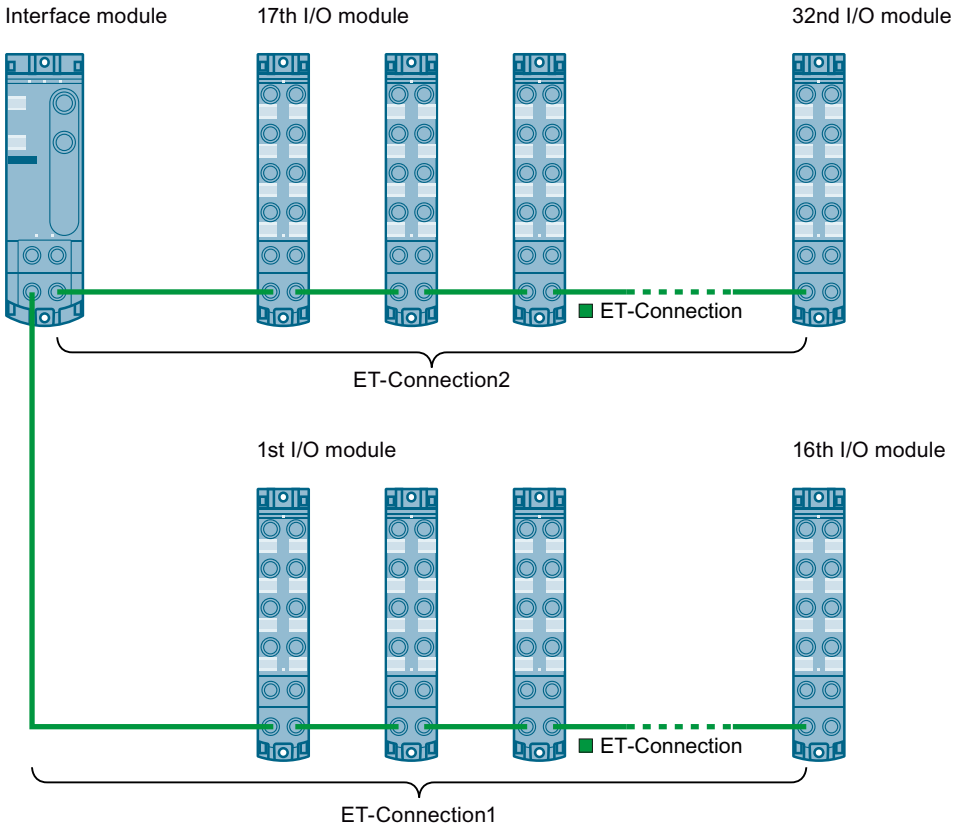

Figure 6-2 ET 200AL with ET-Connection1 and ET-Connection2

6.2.2 Hybrid configuration ET 200AL/ET 200SP with ET-Connection

Hybrid configuration ET 200AL and ET 200SP

You have the possibility to integrate standard and fail-safe I/O modules of the distributed I/O systems ET 200AL (IP65/IP67) into a configuration of the distributed I/O system ET 200SP (IP20). Fail-safe and non-fail-safe modules may be combined at will in the ET 200AL distributed I/O system.

The figure below shows a combination of the modules of the ET 200AL and ET 200SP distributed I/O systems.

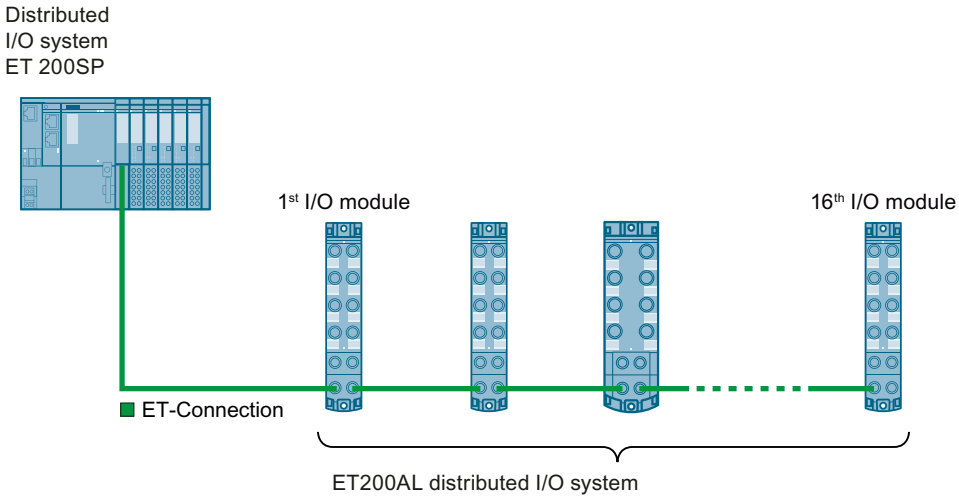

Figure 6-3 Hybrid configuration ET 200SP and ET 200AL with ET-Connection

Requirement

For a hybrid configuration, you need at least the following components:

- Interface module or CPU

  NOTE
  Use of a F-CPU with F-modules
  A fail-safe CPU must also be used when using a fail-safe module in the ET 200AL.

- BaseUnit BU-Send with BusAdapter BA-Send 1xFC
- ET-Connection cable pre-assembled on one side
- Power cable pre-assembled on one side

Rules

When putting together a hybrid configuration, you must observe the following rules:

- The bus length of the ET 200SP distributed I/O system is a maximum of 1 m (excluding interface module/CPU, including BU-Send, BA-Send 1×FC and server module).
- A maximum of 16 ET 200AL I/O modules can be connected to ET-Connection.
- The maximum length of the bus cable for ET-Connection between two modules is 15 m.

Rules

The following table shows a rough overview of the functions of the ET 200AL I/O modules in combination with the ET 200SP.

Function	Hybrid configuration		
	ET 200SP		ET 200AL I/O modules on ET connection
	IM	CPU	
Isochronous mode	●	--	--
Configuration control	●	●	●
Shared device	●	●	●
PROFIenergy	●[1]	--	●[1]
System redundancy S2	●[2]	--	●[2]

1) PROFIenergy is not supported by fail-safe I/O module F-DI 4+F-DQ 2x24VDC/2A, 4xM12

2) With IM 155-6 PN/3 HF and IM 155-6 PN/2 HF as of V4.2

Details on the hybrid configuration are available here (https://support.industry.siemens.com/cs/de/en/view/100300517).

Procedure

Watch video sequence (https://support.industry.siemens.com/cs/ww/en/view/95886672)

Proceed as follows to put together a multi-tier configuration:

1. Mount the BaseUnit BU-Send directly to the right of the ET 200SP interface module or the ET 200SP CPU.
2. Then install the other BaseUnits/I/O modules for the ET 200SP distributed I/O system and the server module.
3. Connect the bus cable for ET-Connection to the BusAdapter BA-Send 1×FC and install it on the BaseUnit BU-Send.
4. Fasten the BusAdapter BA-Send 1×FC with the BaseUnit BU-Send (1 screw with tightening torque of 0.2 Nm). Use a screwdriver with a 3 to 3.5 mm blade to do this.
5. Connect the other end of the bus cable for ET-Connection (with M8 plug) to the first ET 200AL I/O module (socket X30 ET-Connection IN).
6. Connect the supply voltage (24 V DC) to the ET 200AL I/O modules (X80 plug).

Mounting 7

7.1 Basics

Introduction

All the modules of the ET 200AL distributed I/O system are designed for the degree of protection IP65/IP67. This means that you can directly mount this system in your plant.

Installation position

You can mount the ET 200AL distributed I/O system in any position.

Minimum clearances

At ambient temperatures of 50 °C or higher, please ensure that the module is mounted at a distance of least 1 cm from an adjacent module or another device.

Mounting rules

When mounting the modules, you do not need to following any special rules.

NOTE

Mounting of the modules

Mount the ET 200AL distributed I/O system only with disconnected supply voltages

NOTICE

Mounting of the interface modules

When mounting the interface modules of the ET 200AL, ensure that the rear of the module is protected against mechanical damage.

7.2 Mounting modules

Introduction

The modules of the ET 200AL distributed I/O system are designed for installation on a level, firm surface.
Thanks to the axisymmetrical drill holes in the modules, you have the option to fasten the modules on an aluminum profile using tee nuts.
The following images shows the aluminum profile on which you can mount the modules.

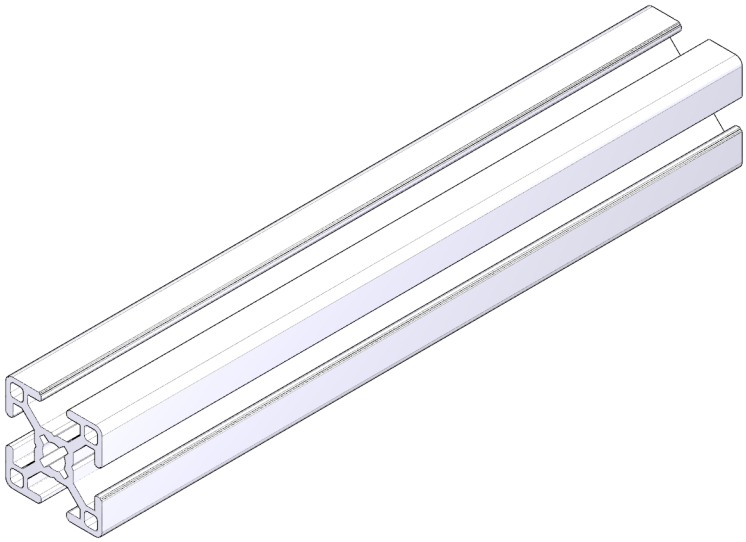

Figure 7-1 Aluminum profile

Required tools

For installation, you need a screwdriver or an Allen wrench.

Required screws

The following table shows and explains the screw types required to mount the modules.

Table 7-1 Recommended screws

Screw type	Explanation
Socket head cap screw M4 according to DIN EN ISO 1207 / DIN EN ISO 1580	The screw length must be at least 30 mm. If you need washers, use DIN EN ISO 7089/DIN EN ISO 7090 washers.
Hexagon socket head cap screw M4 according to DIN EN ISO 4762	

Drill holes of the modules

All modules of the ET 200AL distributed I/O system feature a uniform drill pattern.

- All module housings are axisymmetrical.
- The distance between the top and bottom drill hole is identical for all modules.

Mounting interface module and 45 mm I/O modules (front)

Watch video sequence (https://support.industry.siemens.com/cs/ww/en/view/95886672)

The interface modules and the 45 mm I/O modules have an attachment point on top and on the bottom.

To mount an interface module or 45 mm I/O module, follow these steps:

1. Drill 2 fastening holes with 4.5 mm diameter at a distance of 149.6 mm.
2. Fasten the interface module or the 45 mm I/O module with the screws to both fastening points (tightening torque 1.2 Nm).

The figure below shows the dimensions for fastening the IM 157-1 PN interface module and the DQ 8x24VDC/2A 8xM12 45 mm I/O module.

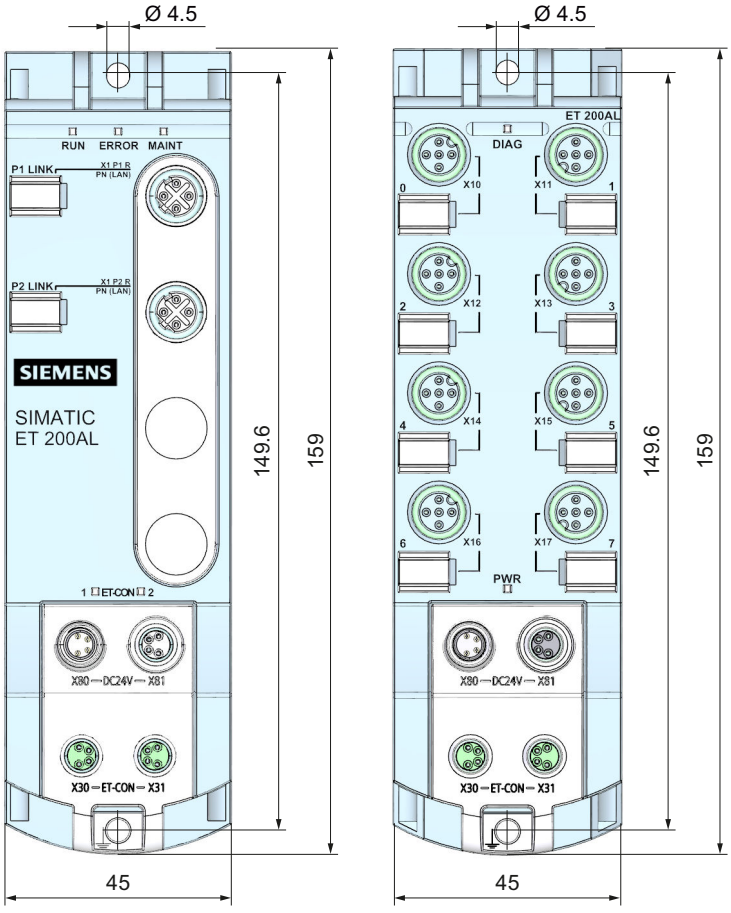

Figure 7-2 Dimensions for mounting interface modules and 45 mm I/O modules

Mounting 30 mm I/O modules (front or side)

Watch video sequence (https://support.industry.siemens.com/cs/ww/en/view/95886672)

The 30 mm I/O modules have an attachment point on top and on the bottom. You also have the option of fastening the 30 mm I/O modules at the side. When fastening them at the side, you must use the supplied spacers.

To mount a 30 mm I/O module, follow these steps:

1. Drill 2 fastening holes with 4.5 mm diameter at a distance of 149.6 mm.
2. Use the supplied spacers for side fastening of the I/O module on the top and bottom (on one side adjacent to the fastening surface).
3. Fasten the I/O module with the screws to both fastening points (tightening torque 1.2 Nm).

The figure below shows the dimensions for fastening the 30 mm I/O modules using the example of the DIQ 4+DQ 4x24VDC/0.5A 8xM8 I/O module.

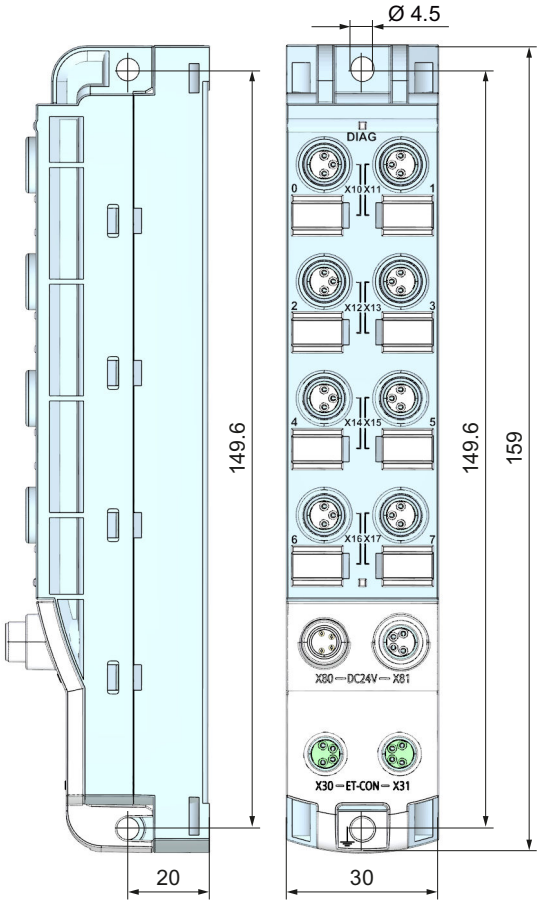

Figure 7-3 Dimensions for mounting 30 mm I/O modules

Fastening for cable ties

All module of the ET 200AL distributed I/O system have an integrated attachment point for cable ties. The attachment points are found on all four corners of the modules.

The figure below shows the top left attachment point for 2.5 mm wide cable ties for fastening the cables.

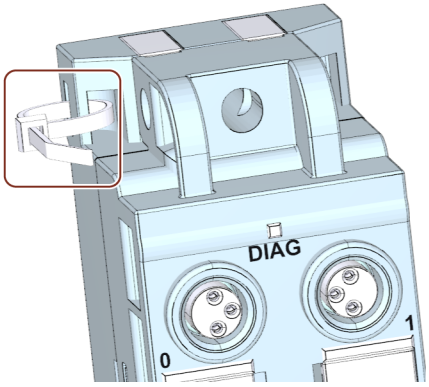

Figure 7-4 Top left attachment point for cable ties

Connecting 8

8.1 Rules and regulations for operation

Introduction

Depending on the area of application, the ET 200AL distributed I/O system, as a component of plants and systems, requires that special rules and specifications be followed.

This section gives an overview of the most important rules to be followed for integration of the ET 200AL distributed I/O system in a plant or in a system.

Specific application

Follow the safety and accident prevention regulations applicable to specific applications, e.g. the machinery directive.

EMERGENCY-STOP device

EMERGENCY-STOP devices according to IEC 60204 (corresponds to DIN VDE 113) must remain in effect in all operating modes of the plant or system.

Excluding hazardous system conditions

Hazardous plant states must not occur.

Ensure that dangerous system conditions are excluded, even in the following situations:

- In the event of a voltage dip or power outage
- When the plant restarts after a voltage dip or power outage
- When the ET 200AL distributed I/O system restarts after interruption of PROFINET communication

If necessary, force the EMERGENCY OFF.

An uncontrolled or undefined startup is not permitted after the "EMERGENCY STOP" is unlocked.

Cables and wires

Make sure that the cables used (incl. connectors) are approved for a continuous operating temperature of at least 70 °C.

External fuses/switches

External fuses and switches must be installed so that they meet the standards for cable and device protection applicable to your application.

Line voltage of the SELV/PELV power supply

The following section describes what you need to pay attention to with respect to the line voltage (you will find additional information in the section Information on insulation, protection class, degree of protection, and rated voltage (Page 139)):

- For stationary plants or systems without an all-pole line disconnector, there must be a disconnector unit (all-pole) fitted in the building installation.
- For load current supplies, the configured rated voltage range must correspond to the local line voltage.
- For all power circuits of the ET 200AL distributed I/O system, the fluctuation/deviation of the line voltage from the rated value must be within the permitted tolerance.

24 V DC supply

Below there is a description of what you need to pay attention to with 24 V DC supply:

- For buildings:
  If there is a danger due to overvoltages, you must take lightning protection measures for external lightning protection (e.g. lighting protection elements).
- With 24 V DC supply lines and signal lines:
  If there is a danger due to overvoltages, you must take lightning protection measures for internal lightning protection (e.g. lightning protection elements. You will find additional information in the Designing interference-free controllers (https://support.industry.siemens.com/cs/ww/en/view/59193566) function manual).
- For 24 V DC supply:
  Ensure that there is a safe (electrical) separation of low voltage (SELV/PELV) according to IEC 61010-2-201 or IEC 60950-1.
  You must secure all feeding supply voltages with a UL/IEC approved fuse 24 V DC/4 A (trigger characteristic type B or C).
- Continuous operation of fail-safe modules with more than 28.8 V DC can result in personal injury and equipment damage.

⚠ WARNING

Continuous operation of fail-safe modules with more than 28.8 V DC can result in personal injury and equipment damage.

Certain transients from certain source impedances (for example according to EN 61000-4-2, 61000- 4 4 and 61000-4- 5), as specified in the "Electromagnetic compatibility" section, can act on this voltage without interrupting operation or causing damage.

Operate the fail-safe module within the voltage parameters specified in the technical specifications. This will avoid unacceptable temperature increases and heat damage that will cause the module to lose its functionality.

Requirements for power supplies in the event of a power interruption

To ensure compliance with IEC 61131-2, use only power supply units/power supplies with a power failure bridging time of at least 20 ms. Observe the relevant requirement in your product standards (e.g. 30 ms for "burners" according to EN 298) with regard to possible voltage interruptions. You can find the latest information on power supply components on the Internet.

Protection against outside electrical influences

Below is a description of what you must pay attention to in terms of protection against electrical impacts and/or faults:

- For all plants or systems in which the ET 200AL distributed I/O system is integrated, you must ensure that the equipment or system is functionally grounded to discharge electromagnetic interference.
- For supply, signal and bus cables, you must ensure that the cable routing and installation is correct.
- For signal and bus cables, you must ensure that a wire/cable breakage or a cross-wire does not lead to undefined states of the plant or system.

Reference

Additional information can be found in the function manual Designing interference-free controllers (https://support.industry.siemens.com/cs/ww/en/view/59193566).

8.2 Additional rules and regulations for the operation of the ET 200AL with fail-safe modules

8.2.1 Safety extra-low-voltage (SELV, PELV) for fail-safe modules

WARNING

The fail-safe modules must be operated with a safe extra-low voltage (SELV, PELV).

You can find additional information on safety extra-low voltage (SELV, PELV) in the data sheets of the applicable power supplies, for example.

The fail-safe modules operate at a rated voltage of 24 V DC. The tolerance range is 20.4 V DC to 28.8 V DC.

Within the overvoltage range from 28.8 V DC to 35 V DC, the F-modules react in a fail-safe manner and the inputs and outputs are passivated. For overvoltages higher than 35 V DC, the F-modules are permanently de-energized.

Use a power supply unit that does not exceed U_m = 35 V DC even in the event of a fault. For more on this, refer to the information in the data sheet on overvoltage protection in the case of an internal error. Or implement appropriate measures to limit the voltage, e.g. use of an overvoltage protector.

All system components that can supply electrical energy in any form whatsoever must fulfill this condition.

Each additional circuit (24 V DC) used in the system must have a safety extra-low voltage (SELV, PELV). Refer to the relevant data sheets or contact the manufacturer.

Sensors and actuators with an external power supply can also be connected to F-modules. Make sure that power is supplied to these components from safety extra-low voltage (SELV, PELV) as well. The process signal of a 24 V DC digital module must not exceed a fault voltage U_m in the event of a fault.

WARNING

Even when a fault occurs, the permissible potential difference between the supply of the interface module (bus voltage) and the load voltage must not be exceeded.

An external direct electrical connection is one way to meet this requirement. This also prevents potential differences from causing voltage additions at the individual voltage sources, which would cause the fault voltage U_m to be exceeded.

Immunity to surge voltages

To meet the product standard for burner controls (EN 298), the wiring must be equipped with external protection against coupled surge voltages caused by lightning. Further information on this can be found in the function manual Designing interference-free controllers (https://support.industry.siemens.com/cs/ww/en/view/59193566).

8.2.2 Requirements for sensors and actuators for fail-safe modules

General requirements for sensors and actuators

Note the following important warning regarding safety-related use of sensors and actuators:

WARNING

Note that instrumentation with sensors and actuators bears a considerable **safety responsibility**. Also bear in mind that sensors and actuators generally do not have proof-test intervals of 20 years as defined in IEC 61508:2010 without considerable loss of safety.

The probability of hazardous faults and the rate of hazardous faults of safety functions must comply with an SIL-defined high limit. A listing of values achieved by F-modules in the technical specifications of the F-modules is available under "Fail-safe performance characteristics".

To achieve the required safety class, suitably qualified sensors and actuators are necessary.

Additional sensor requirements

General rule: To achieve SIL3/Cat. 3/PLe, a single-channel sensor is adequate. However, to achieve SIL3/Cat. 3/PLe with a single-channel sensor, the sensor itself must be SIL3/Cat. 3/PLe-capable; otherwise the sensor must be connected by two channels to achieve this safety level.

To achieve SIL3/Cat. 4/PLe, sensors must be connected by two channels.

WARNING

In the case of fail-safe input modules, the value "0" is output to the F-CPU after detection of faults. You therefore need to make sure that the sensors are implemented in such a way as to ensure the reliable reaction of the safety program when the sensor is in the "0" state.

Example: In its safety program, an EMERGENCY-STOP sensor must achieve the shutdown of the relevant actuator when it is in the "0" state (EMERGENCY-STOP button pressed).

Duration requirements for sensor signals

WARNING

Observe the following requirements for sensor signals:

- To ensure the correct detection of the sensor signals via fail-safe modules with inputs, you need to make sure that the sensor signals are output for a minimum duration.
- For pulses to be detected with certainty, the time between two signal changes (pulse duration) must be greater than the PROFIsafe monitoring time.

Reliable detection by F-modules with inputs

The minimum duration of sensor signals for F-modules with inputs depends on the configured input delay, the parameters of the short circuit test of the sensor supplies, and the configured discrepancy behavior for 1oo2 evaluation. The signal must be greater than the maximum response time of the configured application. Information on calculating the maximum response time can be found in the section "Response times" of the relevant F-module.

The maximum permitted switching frequency of the sensor signals results from the minimum duration.

Additional requirements for actuators

The fail-safe output modules test the outputs at regular intervals. The F-module briefly switches off the activated outputs and, if necessary, switches on the deactivated outputs. You can assign the maximum duration of the test pulses (dark and light period) with parameters.

Fast reacting actuators may briefly drop out or be activated during the test. If your process does not tolerate this, set the pulse duration of the light or dark test correspondingly or use actuators that have sufficient lag.

⚠ WARNING

If the actuators switch voltages greater than 24 V DC (e.g. 230 V AC), the outputs of a fail-safe output module and the parts carrying a higher voltage must be electrically isolated (in accordance with IEC 60664-1).

This is generally the case for relays and contactors. Particular attention must be paid to this with semiconductor switching devices.

Technical specifications of sensors and actuators

Refer to the manuals of the fail-safe modules for technical specifications to assist you in selecting sensors and actuators.

8.2.3 Crosstalk of digital input/output signals

Readback errors may occur on the F-DQ channels if the fail-safe digital output signals and fail-safe digital input signals are routed through a single cable.

Cause: capacitive crosstalk

During the bit pattern test of the outputs or the sensor supply of the inputs, the steep switching edge of the output drivers caused by the coupling capacitance of the line may result in crosstalk to other non-activated output or input channels. This may then lead to a response of the readback circuit in these channels. A cross circuit/short-circuit is detected, which leads to safety-related tripping.

Remedy:

- Separate cables for fail-safe DQ modules and non-fail-safe DQ modules
- Separate cables for F-DQ channel and F-DI channels
- Coupling relay or diodes in the outputs
- Disable the sensor supply test if safety class requirements allow it.

Cause: magnetic crosstalk

Note that an inductive load connected to the F-DQ channels can induce coupling of a strong magnetic field.

Remedy:

- Separate the inductive loads spatially or shield against the magnetic field.
- Configure the readback time to 50 ms or higher.

8.3 Operation of the ET 200AL on grounded/non-grounded infeed

Introduction

Information is provided below on the overall configuration of an ET 200AL distributed I/O system on a grounded incoming supply (TN-S network). The specific subjects discussed are:

- Disconnecting devices, short-circuit and overload protection to IEC 60364 (corresponding to DIN VDE 0100) and IEC 60204 (corresponding to DIN VDE 0113)
- Load current supplies and load circuits
- Supply voltages of the ET 200AL distributed I/O system

Grounded infeed

In grounded incoming supplies, the neutral conductor of the supply system is grounded. A simple ground fault between a live conductor and ground or a grounded section of the plant causes the protective devices to trip.

Supply voltages

Provide the ET 200AL distributed I/O devices with a SELV/PELV supply voltage for 1L+.
The supplied SELV/PELV load voltage for 2L+ can be switched, depending on the application.

- 1L+: Supply voltage (non-switched)
- 2L+: Load voltage (switched)

Safe electrical separation (SELV/PELV)

Mains devices/power supply modules with secure electrical separation SELV/PELV are required for the operation of the ET 200AL distributed I/O system. These power supplies/power supply modules must comply with IEC 61010-2-201.

The wiring of SELV/PELV circuits must be separated from the wiring of non-SELV/PELV circuits. Alternatively, the insulation of all conductors must be dimensioned for the higher voltage.

NOTICE
Operation in damp/wet environments When operating in a damp/wet environment, other voltage limits apply for SELV/PELV according to IEC 61010-2-201.

Configuring ET 200AL with grounded reference potential

When configuring the ET 200AL distributed I/O system with grounded reference potential, occurring interference currents are discharged into functional earth. The connections must be externally connected (connection between 1M and FE).

Configuring ET 200AL with ungrounded reference potential

When configuring the ET 200AL distributed I/O system with non-grounded reference potential, occurring interference currents are discharged via an internal RC network to functional earth (no external connection between 1M and FE).

ET 200AL in the overall configuration

The figure below shows the ET 200AL distributed I/O system in the complete electrical configuration using the example of an interface module.

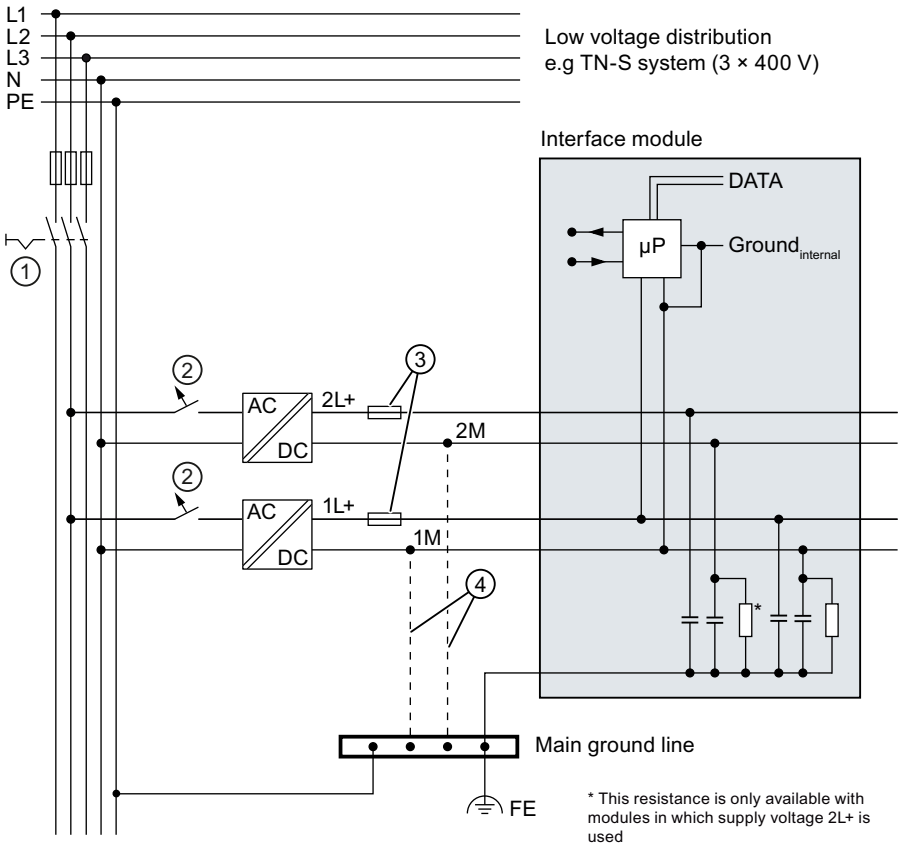

① Main switch

② Short-circuit and overvoltage protection

③ Fuses for cable protection (automatic circuit breaker for 4 A)

④ When configuring the ET 200AL distributed I/O system with non-grounded reference potential, no connection is made between 1M, 2M and FE.

Figure 8-1 Electrical configuration

Components and protective measures

Various components and protective measures are stipulated for setting up a complete plant. The types of components and the degree to which the protective measures are mandatory depend on the IEC regulation that applies to your plant setup.
The following table shows the components of the electrical configuration with reference to the previous figure and compares the IEC regulations.

Table 8-1 Components of electrical configuration

	Reference to illustration	IEC 60364 (DIN VDE 0100)	IEC 60204 (DIN VDE 0113)
Disconnection element for controller, sensors, and actuators	1	Main switch	Disconnector
Short-circuit / overload protection	2	Single-pole protection of circuits Secure all incoming supply cables with a circuit breaker (24 V DC/4 A).	Secure with one pole with a grounded secondary circuit
Cable protection	3	Protection of cables and wires against overcurrent	-

Insulation monitoring

In the following situations, you must provide insulation monitoring.

- When configuring the ET 200AL distributed I/O system with non-grounded reference potential
- When hazardous system conditions may occur due to errors

8.4 Electrical configuration of the ET 200AL

Electrical isolation

When electrically configuring the ET 200AL distributed I/O system, there is electrical isolation between:

- Load voltage 2L+ and all other switching parts
- Communication interfaces (PROFINET/PROFIBUS) of the interface modules and all other switching parts
- ET-Connection and all other switching parts

The following images show the potential conditions of the modules of the ET 200AL distributed I/O system.

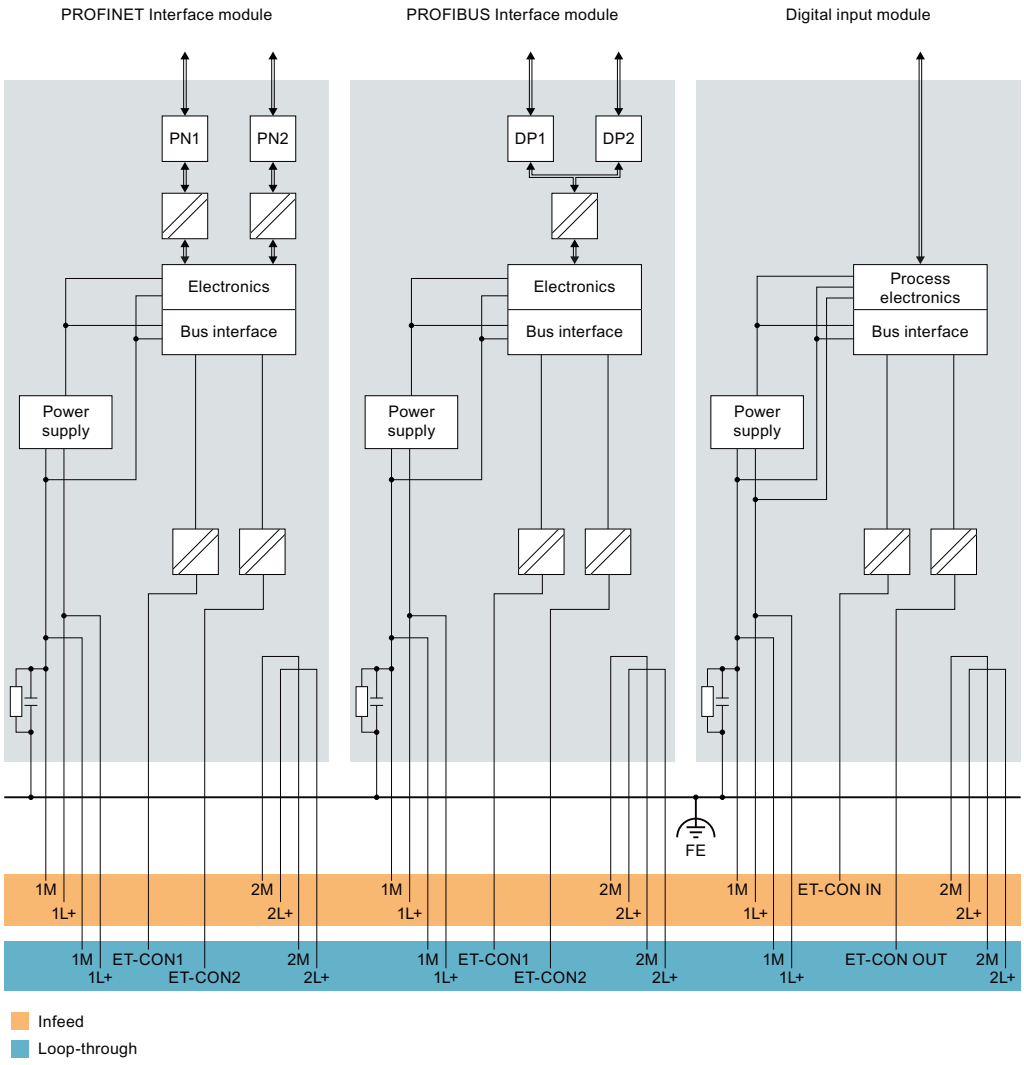

Figure 8-2 Potential conditions of the ET 200AL distributed I/O system (Part 1)

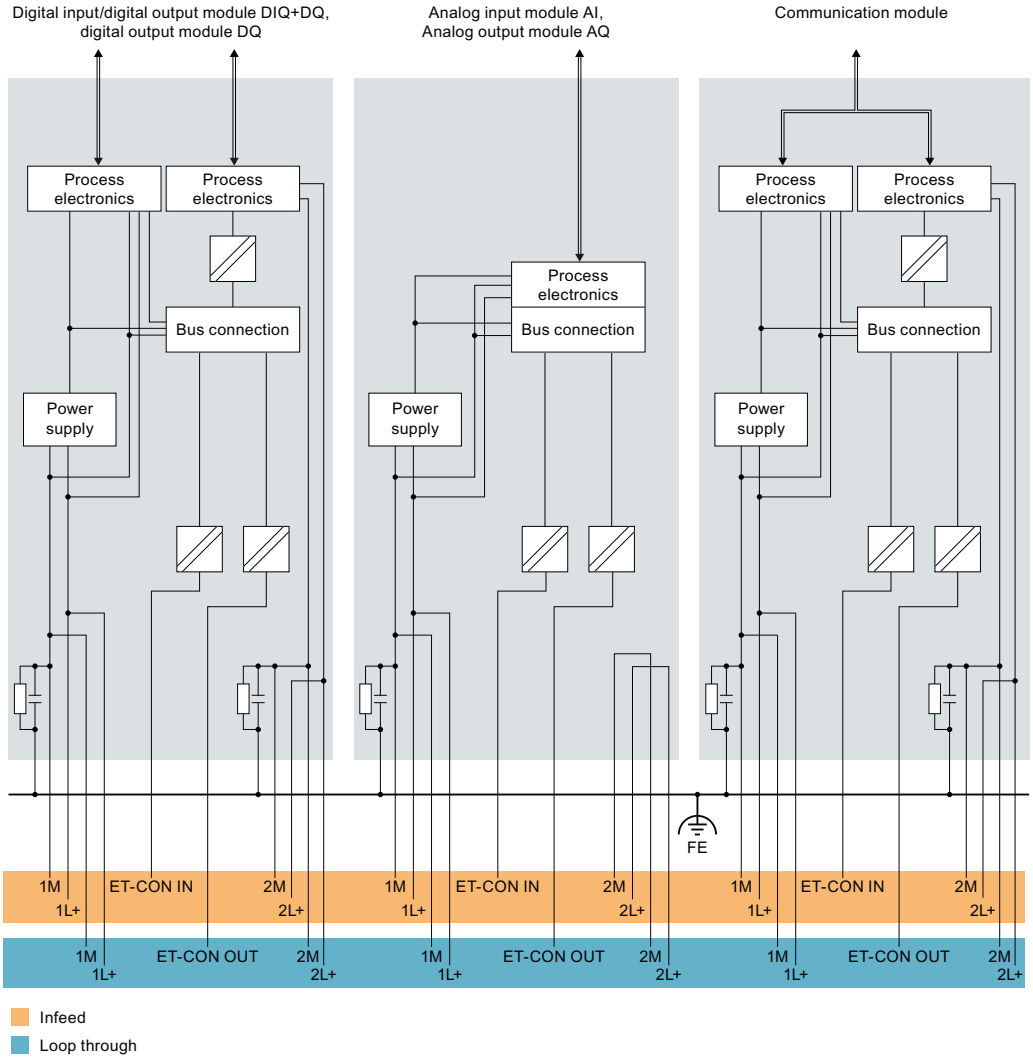

Figure 8-3 Potential conditions of the ET 200AL distributed I/O system (Part 2)

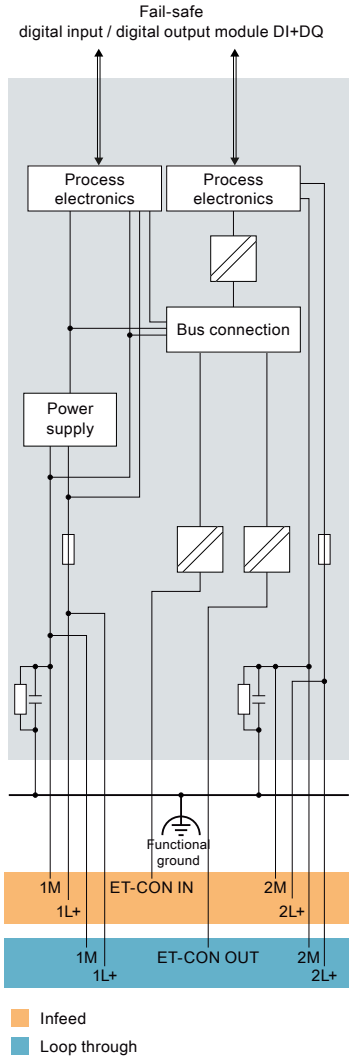

Figure 8-4 Potential conditions of the ET 200AL distributed I/O system (Part 3)

Connection of a digital output with a digital input

NOTICE

Pay attention to the potential group

When a digital output is connected to a digital input, pay attention to the potential groups. Depending on the configuration, 1M and 2M may then be connected, resulting in elimination of the electrical isolation between 1L+ and 2L+. The possible compensating currents can destroy the digital module.

⚠ WARNING

Note potential groups for safety-related shutdown

When a digital output is connected to a digital input, pay attention to the potential groups. Depending on the configuration, 1M and 2M can then be connected, which leads to elimination of the electrical isolation between 1L+ and 2L+.
The safety-related shutdown is not permitted if the electrical isolation is eliminated.

Cable protection

According to IEC 60364, cable protection is required, i.e. you must always secure the incoming lines externally.

You must secure all incoming supply voltages with a UL/IEC approved 24 V DC/4 A fuse (trigger characteristic type B or C).

Power supply of the configuration

Two voltage groups are available for the distributed I/O system ET 200AL: 1L+ (supply voltage) and 2L+ (load voltage)

A second infeed may be needed to supply all the modules of a configuration with the required voltage. Renewed voltage supply of 1L+ and 2L+ can be necessary to configure different potential groups or because the voltage is not sufficient for all modules due to the voltage drop. Create a power balance for the selection of the infeed point of the voltage.

NOTE

Turning 1L+ and 2L+ on and off

In contrast to the load voltage 2L+, the operational switching on and off of the supply voltage 1L+ results in a restart of the module.

The figure below shows a configuration with a new voltage infeed for the modules. The different potential groups have a gray background.

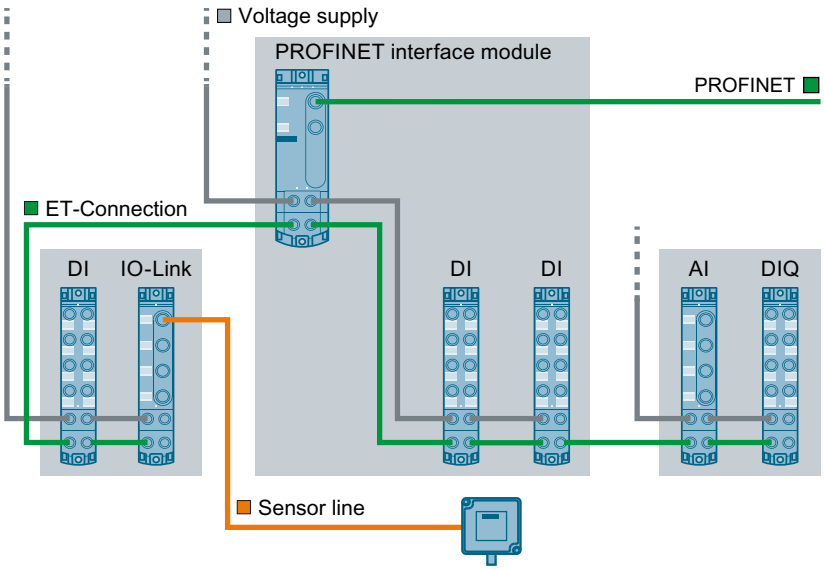

Figure 8-5 Wiring of the power supply

Reference

You will find additional information on electrical configuration and the voltage drop in the section Connecting cables for ET 200AL (Page 74).

8.5 Connecting ET 200AL to functional earth

Introduction

You must connect the distributed I/O system ET 200AL to functional earth (FE)

What is functional earth?

All ET 200AL modules feature a functional earth connection. This connection is used to suppress interference sensitivity, but not for protection purposes. With the functional earth connection, you create an electrical connection directly to a point of your system or shielding. This discharges the EMC interference directly into the earth. By discharging the EMC interference, the interference safety of the entire module is increased.

The figure below shows the symbol with which the functional earth connection is identified on the ET 200AL modules.

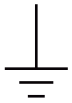

Figure 8-6 Functional earth

8.5.1 Mounting ET 200AL modules on conductive substrate

Requirement

Conductive substrate for mounting of the module

Required tools

To connect to functional earth, you need the following tools:

- Screwdriver

Required accessories:

To connect to functional earth, you need the following accessories:

- 2 x M4 fastening screws.

Mounting

To connect modules of the ET 200AL distributed I/O system to functional earth with a conductive mounting substrate, proceed as follows:

1. Drill two fastening holes.
2. Screw the module with the M4 fastening screws using a torque of 1.2 Nm.

NOTE

Earthing with conductive mounting substrate

When you fasten a module of the ET 200AL distributed I/O system on a conductive, grounded substrate, the bottom fastening screw provides a conductive connection to the ground potential.

Ensure that there is a low-impedance connection between the module and conductive underground as well as between the conductive underground and functional earth.

Reference

You will find more information on installing the modules in the section Mounting modules (Page 53).

8.5.2 Mounting ET 200AL modules on non-conductive substrate

Requirement

Conductive substrate for mounting of the module

Required tools

To connect to functional earth, you need the following tools:

- Screwdriver
- Stripping tool
- Crimp tool

Required accessories:

To connect to functional earth on a non-conductive fastening substrate, you need the following accessories:

- 2 x M4 fastening screws.
- Cable lug suitable for M4 screws
- Grounding cable (braided copper cable) with a minimum cross section of 4 mm^2

Mounting

To connect modules of the ET 200AL distributed I/O system to functional earth, proceed as follows:

1. Drill two fastening holes.
2. Strip the grounding cable.
3. Fasten the cable lug to the grounding cable.
4. Screw the module and the cable lug with the M4 fastening screws using a torque of 1.2 Nm.

The figure below shows how to connect functional earth using the example of the IM 157-1 PN interface module.

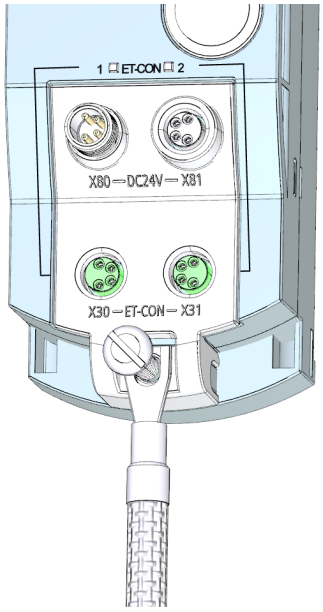

Figure 8-7 Connecting the functional earth

NOTE

Earthing with non-conductive mounting substrate

Make sure there is a low-impedance connection between the module and the functional earth.

Reference

You will find more information on installing the modules in the section Mounting modules (Page 53).

8.6 Connecting cables for ET 200AL

Impact of cable length on the supply voltage

When wiring your configuration, you must take into account the impact of the cable length on the supply voltage of the ET 200AL distributed I/O system.

CAUTION

Pay attention to maximum incoming currents

For each power supply (1L+, 2L+), you can feed in a maximum of 4A.

If you exceed the maximum incoming currents and do not comply with the required cable cross sections, an increased incoming current could lead to overheating of the cable insulation and the contacts. This could result in damage to the modules.

The figure below shows the voltage drop depending on the cable length for 4 current strengths, using the example of a copper cable with ∅ 0.5 mm².

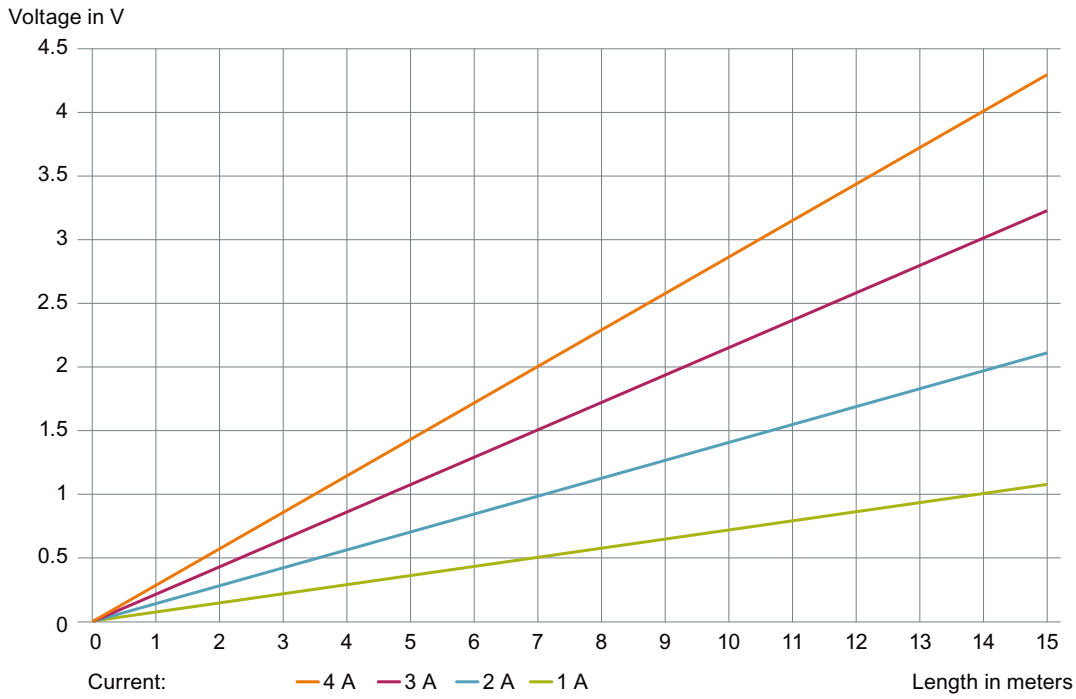

Figure 8-8 Voltage drop with a cable cross-section of 0.5 mm²

To estimate the voltage drop in your ET 200AL distributed I/O system, you must add the voltage drops of the different cables. For every module used, you must add an additional voltage drop of around 0.1 V.

Example

If you have a 7 m power supply cable with ∅ 0.5 mm², the voltage drop is around 1.5 V with a load of 3 A.

8.7 Wiring

Connection

Connect all cables to the front side of the modules:

- Supply voltage and ET-Connection to the 4-pin M8 round sockets and M8 round connectors
- Signal lines to the 3-pin M8 or 4/5-pin M12 round sockets
- Fieldbus lines to the 4/5 pole M12 round sockets and M12 round connectors

---

NOTE

Color coding

The sockets for ET-Connection and the power supply of the modules are color-coded. These colors correspond to the colors of the offered cables.

Requirement

Wire the modules with the supply voltage off.

Required tools

If you are not using pre-assembled cables, you need the following tools:

- Stripping tool
- Screwdriver to wire the connection plugs
- Stripping Tool for ET-Connection

Required accessories when connecting the supply voltage

You need the following accessories:

- Cables
  - Pre-assembled power cable, M8, 4-pin, or
  - Flexible 4-wire copper cable (wire cross section: 0.25 to 0.5 mm^2)
- 4-pin M8 connection plug

Accessories required for the connection of ET-Connection

You need the following accessories:

- ET-Connection cables
- 4-pin M8 connection plug

NOTE

ET-Connection cables

When connecting ET-Connection **use only** the offered cables.

Connecting M8 plugs

To connect M8 plugs, proceed as follows:

1. Insert the connector in the appropriate round socket on the module.
   Make sure that there is proper locking between the connector and socket.
2. Tighten the connector using the knurled screw with a torque of 0.4 Nm.

The figure below shows the connection of the M8 plugs, using the example of the DIQ 4+DQ 4x24VDC/0.5A 8xM8 digital input / digital output module.

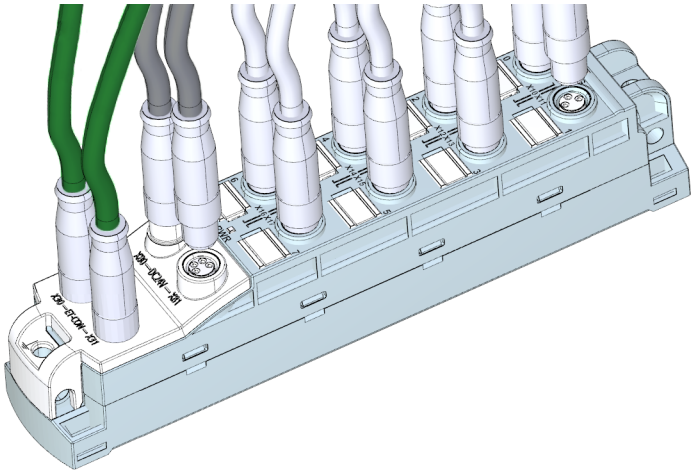

Figure 8-9 Connecting M8 plugs

Connecting M12 plugs

To connect M12 plugs, proceed as follows:

1. Insert the connector in the appropriate round socket on the module.
   Make sure that there is proper locking between the connector and socket (nut and spring).
2. Tighten the connector using the knurled screw with a torque of 1 Nm.

The figure below shows the connection of the M12 plugs, using the example of the analog input module AI 4xU/I/RTD 4xM12.

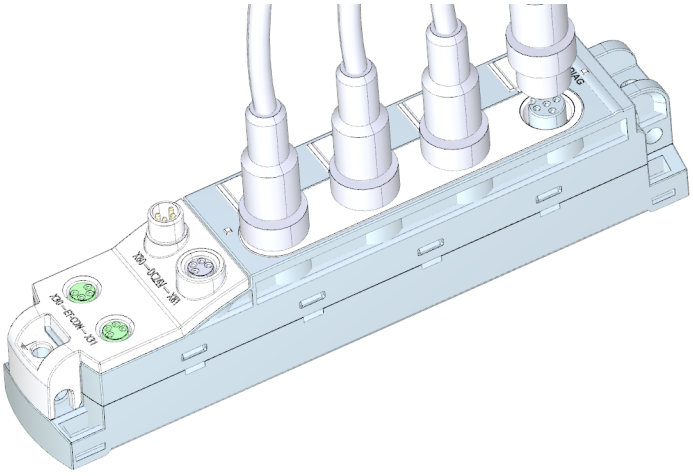

Figure 8-10 Connecting M12 plugs

Pin assignment of the sockets

The pin assignment of the sockets can be found in the manuals for the interface modules (https://support.industry.siemens.com/cs/ww/en/ps/14246/man) and I/O modules (https://support.industry.siemens.com/cs/ww/en/ps/14247/man) in the section on pin assignment and on the side surface of the module.

Y-cable

The Y-cable allows you to connect two actuators or sensors to the inputs or outputs.
The use of a Y-cable is particularly recommended when two channels are occupied for each socket of an I/O device. The Y-cable distributes the channels to two circular connectors.

- Y-cable (6ES7194-6KA00-0XA0) for connecting 2 actuators or sensors for double connection of inputs (also fail-safe inputs) or double connection of outputs with one cable
- Y-cable (6ES7194-6KB00-0XA0) for connecting 2 sensors for double connection F-DI with one cable. Only suitable for use with the F-DI module.

You can find details about connection in the respective user manual of the product.

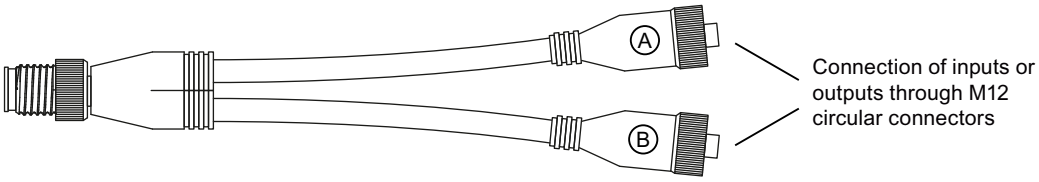

Figure 8-11 Y-cable

The following figure shows the wiring of the Y-cables.

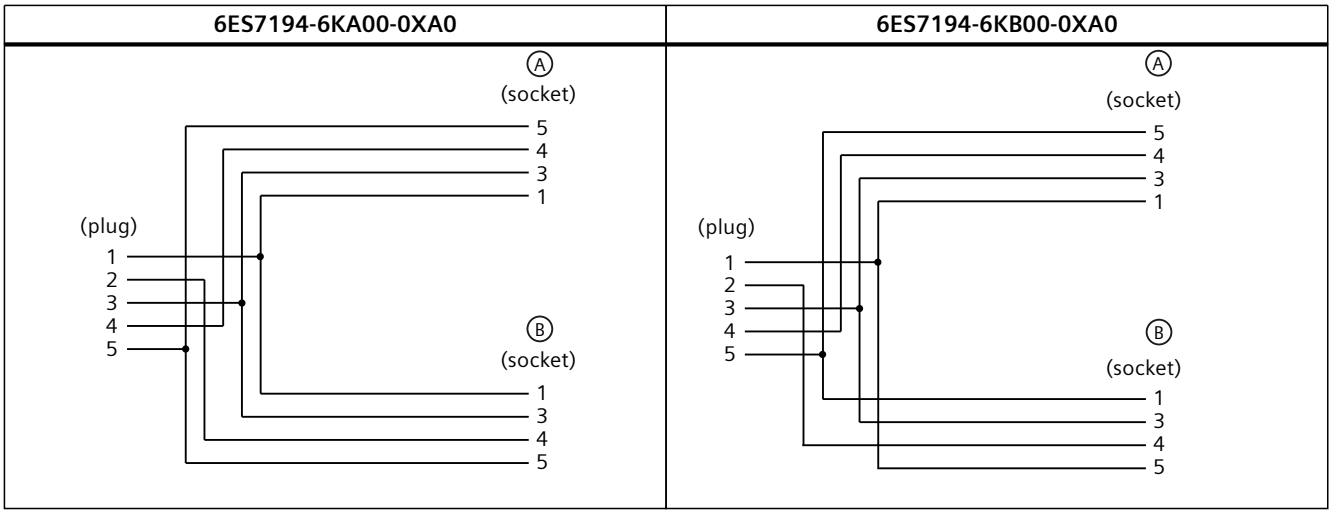

Inverted Y-cable

The inverted Y-cable enables the connection of fail-safe inputs and a fail-safe output to an I/O device (for example a Siemens SIRIUS safety position switch with interlock) with only one cable.
You can find details about connection in the respective user manual of the product.

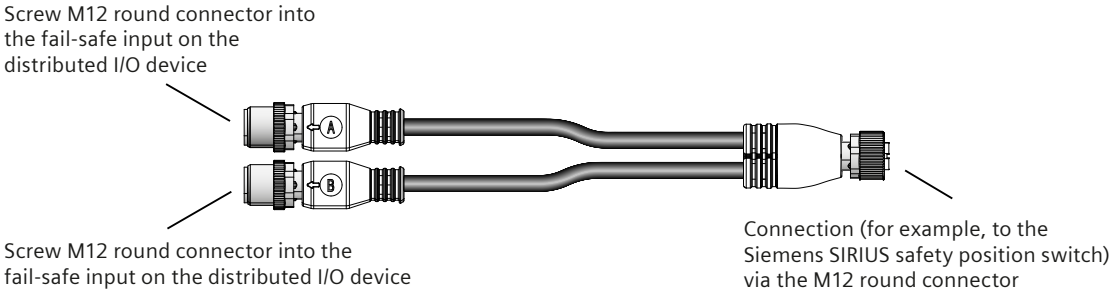

Figure 8-12 Inverted Y-cable

The following figure shows the wiring of the Y-cables.

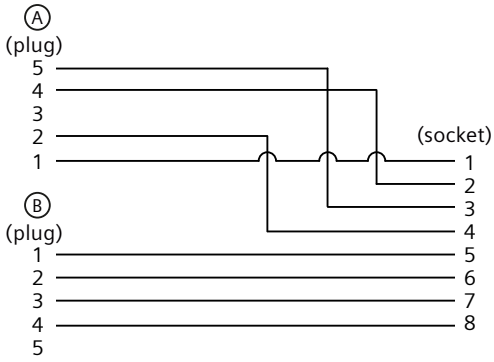

Figure 8-13 Y-cable 6ES7194-6KC00-0XA0

Sealing of unused sockets

To ensure IP65 or IP67 degree of protection, seal off all unused sockets with sealing caps.

Article numbers for accessories/spare parts.

You will find the article numbers in the Appendix in section Accessories/spare parts (Page 145).

8.8 ET 200AL marking

8.8.1 Factory markings

Introduction

For better orientation, the ET 200AL distributed I/O system is identified using various markings which will help you when configuring and connecting the modules.

Marking of the interfaces

The interfaces of the modules are factory-labeled.
The table below shows the labeling of the interfaces.

Table 8-2 Interface labeling

interface	Labeling
PROFINET IO interfaces MultiFieldbus interfaces	X1 P1R and X1 P2R
PROFIBUS DP interfaces	X1 DP1 and X1 DP2
I/O input and output interfaces	X10 to X17
ET-Connection interfaces (interface modules)	X30 (ET-CON1) and X31 (ET-CON2)
ET-Connection interfaces (I/O modules)	X30 (ET-CON IN) and X31 (ET-CON OUT)
Power supply interfaces	X80 (IN) and X81 (OUT)

NOTE
Color coding
The sockets for ET-Connection and the power supply of the modules are color-coded. These colors correspond to the colors of the offered cables.

NOTICE
ET-Connection/supply voltage
Observe the correct wiring of the M8 sockets for ET-Connection and the supply voltage.
Mixing up the ET-Connection connectors and the connectors for the supply voltage can destroy the module.

Pin assignment

The pin assignments of the various interfaces are lasered at the factory, on the side of every module.

8.8.2 Optional markings

Introduction

In addition to the factory markings, there are also optional possibilities for labeling and/or identifying interfaces and modules on the ET 200AL distributed I/O system.

Identification label

The identification labels come with each module as strips and can be machine-printed. A strip has 10 identification labels measuring 10 x 5 mm in the color RAL9016. The identification labels can be inserted into every module at the points provided. The identification labels are used for channel, module and slot labeling.

The figure below shows all points where you can use the identification labels using the example of the IO-Link Master CM 4xIO-Link 4xM12 communication module.

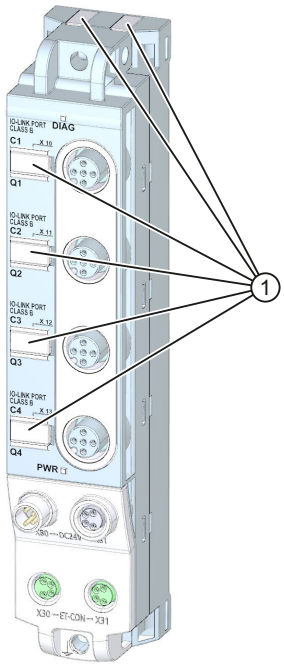

① Identification labels

Figure 8-14 Optional marking

8.8.3 Mounting identification labels

Introduction

This section describes how to mount or remove identification labels.

Required tools

You need a screwdriver with 3 mm blade width (only to remove identification labels).

Mounting procedure

To mount an identification label, proceed as follows:

1. Print the identification label using commercially available marking systems.
2. Press the identification label out of its holder.
3. Stick the identification labels into the cutouts provided, as shown in the figure Optional marking (Page 81).

Mounting the identification labels is the same for all modules.

Removal procedure

To remove an identification label, proceed as follows:

1. Carefully use a screwdriver to pull out the identification label.

Removing identification labels is the same for all modules.

Configuring

9

Introduction

You configure and assign parameters for the ET 200AL distributed I/O system (interface modules and I/O modules) using STEP 7 or the configuration software of another manufacturer.

Requirements

Table 9-1 Configuration software and requirements

Configuration software	Requirements	Installation information
STEP 7 (TIA Portal) as of V19 for modules: • IM 157-1 MF	• MultiFieldbus: as of Support Package HSP	STEP 7 online help
STEP 7 Safety (TIA Portal) as of V17 for modules: • F-DI 4+F-DQ 2x24VDC/2A 4xM12	• PROFINET-compliant F-CPU (with CP expansion modules) • PROFIsafe-compliant F-PLC controller, 2.6.X (RIOforFA safety profile) or PROFIsafe 2.4	
STEP 7 (TIA Portal) as of V14 for modules: • DIQ 16x24VDC/0.5A 8xM12 • AQ 4XU/I, 4XM12	• PROFINET IO, PROFIBUS DP: as of Support Package HSP 0194	
STEP 7 (TIA Portal) V13 SP1 or higher for modules: • DI 8x24VDC 4xM12 • DI 16x24VDC 8xM12	• PROFINET IO, PROFIBUS DP: as of Support Package HSP 0155	
STEP 7 (TIA Portal) V13 SP1 or higher for modules: • DIQ 4+DQ 4x24VDC/0.5A 4xM12 • DQ 8x24VDC/2A 8xM12	• PROFINET IO, PROFIBUS DP: as of Support Package HSP 0156	
STEP 7 (TIA Portal) V13 SP1 or higher for modules: • IM 157-1 PN • IM 157-1 DP • DI 8x24VDC 8xM8 • DIQ 4+DQ 4x24VDC/0.5A 8xM8 • AI 4xU/I/RTD 4xM12 • CM 4xIO-Link 4xM12	• none, integrated in STEP 7	

Configuration software	Requirements	Installation information
STEP 7 as of V5.5 SP4 for modules: • IM 157-1 PN • IM 157-1 DP	• PROFINET IO: as of Support Package HSP 0259 • PROFIBUS DP: as of Support Package HSP 0258	STEP 7 online help
STEP 7 as of V5.5 SP4 for all IO modules	• PROFINET IO, PROFIBUS DP: as of Support Package HSP 0260	
STEP 7 (TIA Portal) as of V13 Update 3	• PROFINET IO GSD file: GSDML-Vx.y-Siemens-ET200AL-"Date in format yyyymm-dd".xml (https://support.industry.siemens.com/cs/ww/en/view/92346477) for example: GSDML-V2.31-Siemens-ET200AL-20140507.xml • PROFIBUS DP GSD file: siem81A9.gsg (https://support.industry.siemens.com/cs/ww/en/view/92346281)	
Software of third-party manufacturer		Manufacturer documentation

Configuring the ET 200AL distributed I/O system

See the STEP 7 online help or the documentation of the configuration software manufacturer.

Configuring - MultiFieldbus maximum configuration

Each of the connections for ET-Connection occupies a slot in the configuration. The slots for ET-Connection1 and ET-Connection2 are pre-defined statically in the GSD file.
ET-Connection1 is always at slot 1 and ET-Connection2 at slot 18.

The fixed slot assignment of ET-Connection1 and ET-Connection2 offers you the following advantages:

- You can expand ET-Connection1 and ET-Connection2 without a high workload
- Transparency in configuration control
- Simplification of diagnostics alarms and troubleshooting

The figure below shows the maximum configuration with modules of the ET 200AL distributed I/O system.

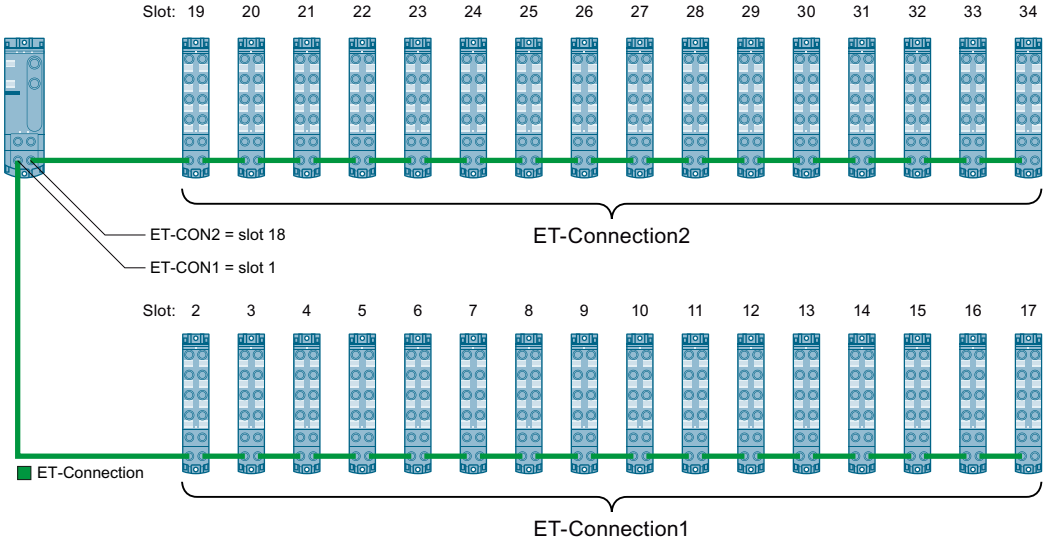

Figure 9-1 MultiFieldbus maximum configuration

Configuration - PROFINET maximum configuration

Each of the connections for ET-Connection occupies a slot in the configuration. The slots for ET-Connection1 and ET-Connection2 are specified statically in the PROFINET GSD file. ET-Connection1 is permanently on slot 1 and ET-Connection2 on slot 18.

The fixed slot assignment of ET-Connection1 and ET-Connection2 offers you the following advantages:

- You can expand ET-Connection1 and ET-Connection2 without a high workload
- Transparency in configuration control
- Simplification of diagnostics alarms and troubleshooting

The figure below shows the maximum configuration with modules of the ET 200AL distributed I/O system.

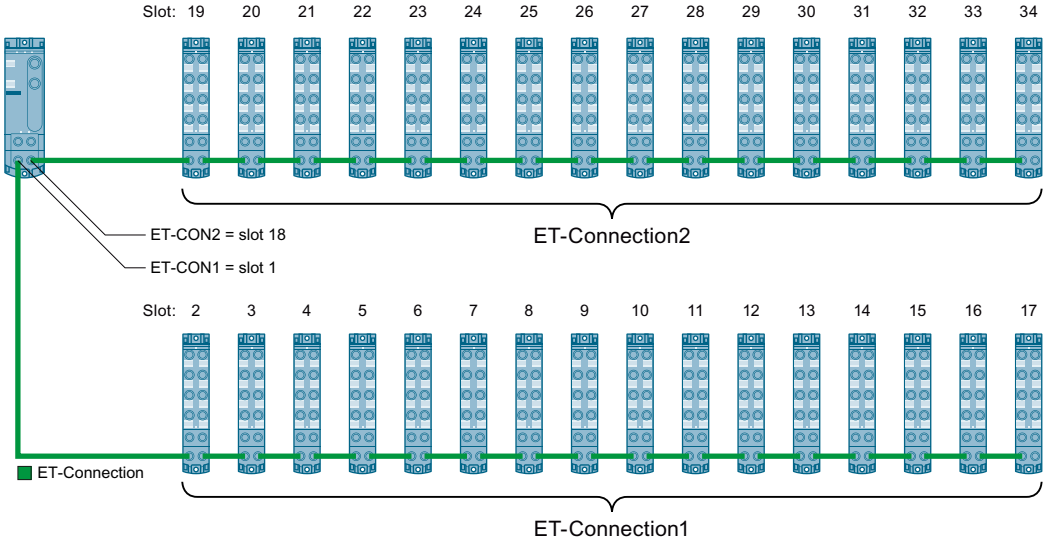

Figure 9-2 PROFINET maximum configuration

Reference

You can find additional information on this topic in section Configuration control (option handling) (Page 89).

Configuration - PROFIBUS maximum configuration

Each of the connections for ET-Connection occupies a slot in the configuration. The slot for ET-Connection1 is statically defined in the PROFIBUS GSD file. ET-Connection1 is always permanently installed in slot 1. Always place the topology module for ET-Connection2 on slot 18. You do not need to fill slots in the configuration for ET-Connection1 with dummy modules.

The fixed slot assignment of ET-Connection1 and ET-Connetion2 offers you the following advantages:

- You can expand ET-Connection1 and ET-Connection2 without a high workload; for ET-Connection1 you need to remove the placeholder, the I/O module is placeable (no placeholders are needed for ET-Connection2)
- You cannot configure more modules on ET-Connection1 or ET-Connection2 than are allowed.
- Transparency in configuration control
- Simplification of diagnostics alarms and troubleshooting

The figure below shows the maximum configuration with modules of the ET 200AL distributed I/O system.

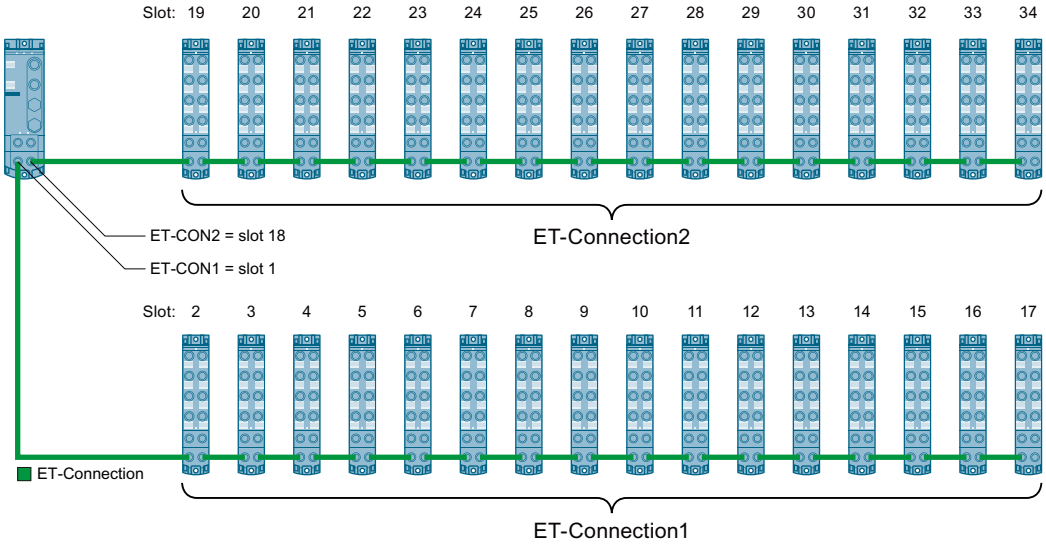

Figure 9-3 PROFIBUS maximum configuration

Assigning the PROFIsafe addresses

The F-destination address is permanently stored in the eCoding plug connector of the fail-safe ET 200AL I/O modules.

NOTE

When assigning the PROFIsafe addresses, the F-modules must be supplied with voltage 1L+.

NOTE

Follow these points in conjunction with the configuration control:

Before you can use the configuration control together with F-modules, the PROFIsafe addresses must be assigned to the F-modules in the designated slots.

For this, each F-module must be plugged into the slot configured for it. The actual configuration may differ from the set configuration.

You can find additional information about the assignment of the PROFIsafe addresses in the manual SIMATIC Safety - Configuring and Programming (https://support.industry.siemens.com/cs/ww/en/view/54110126).

Reference

You can find additional information on this topic in section Configuration control (option handling) (Page 89).

10

Configuration control (option handling)

10.1 Configuration control

Introduction

With configuration control (option handling), you handle various standard machine configuration levels in one project without having to change the hardware configuration or user program.

Operating principle of configuration control

You can use configuration control to operate different standard machine configurations with a single configuration of the ET 200AL distributed I/O system.

- A station master (maximum configuration) is configured in a project. The station master comprises all modules needed for all possible equipment components of a modular standard machine.
- Provision is made in the user program of the project for various station options for the different configuration levels of the standard machine and for selection of a station option. A station option uses, for example, only some of the modules of the station master and these modules are not inserted in the configured order.
- Manufacturers of standard machines select a station option for a configuration level of the standard machine. They do not have change the project or download the modified configuration.

You use a control data record you have programmed to notify the CPU/interface module as to which modules are missing or located on different slots in a station option as compared to the station master. If a module with the configuration control is moved to another slot, it retains its parameter assignment.

The configuration control allows you to flexibly vary the centralized/distributed configuration. As a precondition for this, the station option must be able to be derived from the station master.

The following figure shows 3 configurations of a standard machine with the corresponding station options of the ET 200AL distributed I/O system.

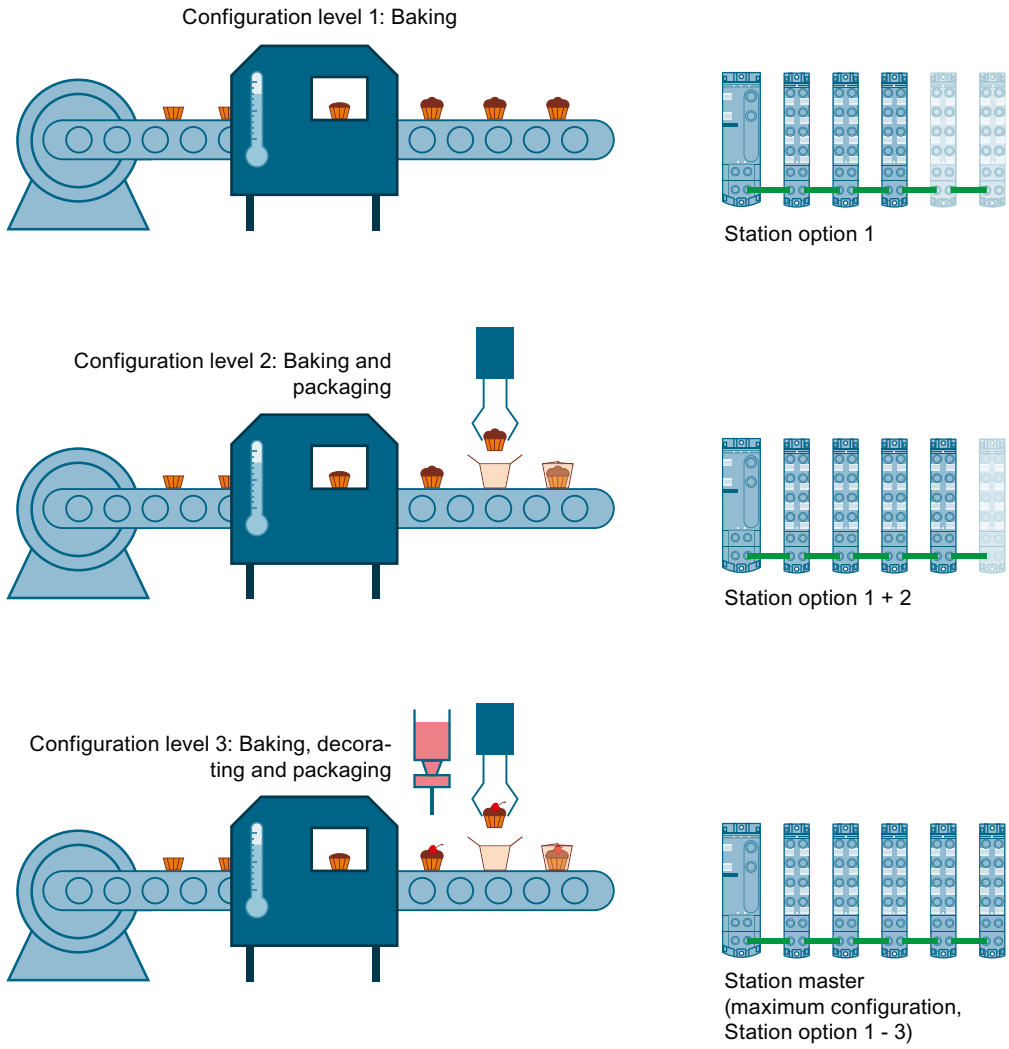

Figure 10-1 Various configuration levels of a standard machine with the corresponding station options of the ET 200AL distributed I/O system.

Benefits

- Easy project handling and commissioning through use of a single STEP 7 project for all station options.
- Easy handling during maintenance, versioning and upgrades.
- Hardware savings: Only the I/O modules needed for the current station option of the machine are installed.
- Potential savings when building, commissioning and creating documentation for standard machines.

Procedure

To set up the configuration control, follow these steps in the order given:

Step	Procedure	See...
1	Enable configuration control in STEP 7	Section Configuring (Page 91)
2	Create control data record	Section Creating the control data record (Page 93)
3	Transfer control data record	Section Transferring the control data record in the user program of the CPU (Page 101)

Library for configuration control

A library for configuration control is available for download (https://support.industry.siemens.com/cs/ww/en/view/29430270) on the internet. The library contains data types with the structure of the control data records for the ET 200AL distributed I/O system. You can implement your flexible automation solution economically with the help of these data types.

10.2 Configuring

Requirements

Via PROFINET IO:

- Configuration software, for example STEP 7 Professional as of V13
- IM 157-1 PN or IM 157-1 MF
- You have assigned the interface module to an IO controller in STEP 7

Via EtherNet/IP:

- Configuration software, e.g. MFCT
- IM 157-1 MF
- You have assigned the interface module to a scanner in MFCT.

Via Modbus TCP:

- Configuration software, e.g. MFCT
- IM 157-1 MF
- You have assigned the interface module to a Modbus client in MFCT.

Via PROFIBUS DP:

- Configuration software, for example STEP 7 Professional as of V13
- IM 157-1 DP
- You have assigned the interface module to an DP master in STEP 7

- The parameter "Operation if preset configuration does not match actual configuration" is activated.
  The parameter "Operation if preset configuration does not match actual configuration" is located in STEP 7 in the properties of the interface module under "Module parameters" > "Start-up".

NOTE

Disabled parameter "Startup if preset configuration does not match actual configuration"

If an I/O module is missing or an incorrect or additional I/O module is plugged in and the "Startup if preset configuration does not match actual configuration" parameter is disabled, the ET 200AL distributed I/O system does not start up.

The diagnostic "Slot x no module" or "Slot x wrong module" is generated.

If the IM 157-1 DP interface module does not start up in this status, the RUN and ERROR LEDs on the interface module flash red. The DIAG LEDs flash green on all I/O modules as well.

NOTE

Follow these points in conjunction with the configuration control:

Before you can use the configuration control together with F-modules, the PROFIsafe addresses must be assigned to the F-modules in the designated slots.

For this, each F-module must be plugged into the slot configured for it. The actual configuration may differ from the set configuration.

Required steps

Enable the "Allow to reconfigure the device via the user program" parameter when configuring the interface module.

- The parameter "Enable reconfiguration of device via user program" is located in the properties of the interface module under "Module parameters" > "Configuration control".

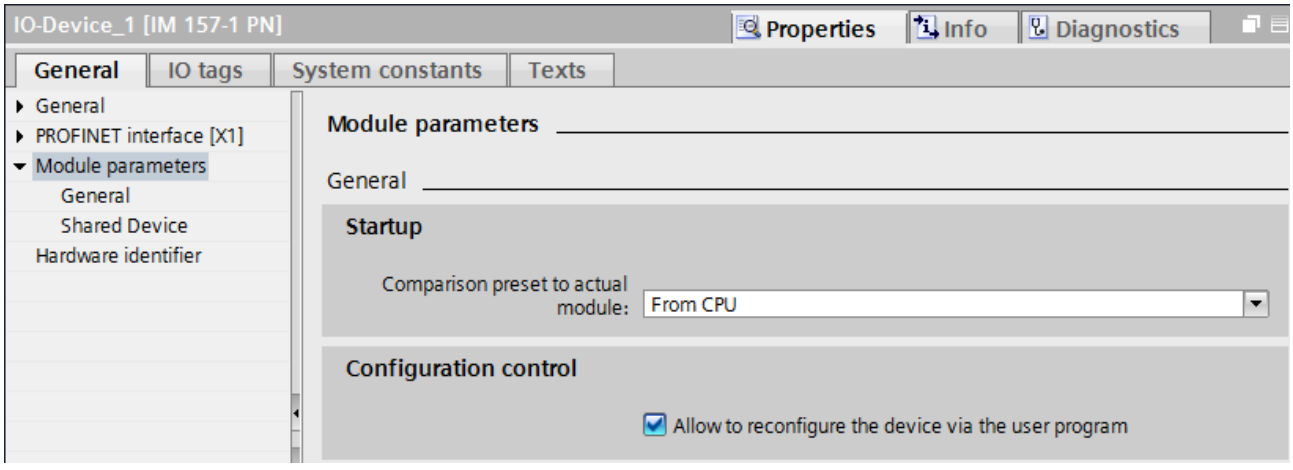

Figure 10-2 Enabling configuration control using the IM 157-1 PN as an example

10.3 Creating the control data record

10.3.1 Introduction

Required steps

The following description shows as an example how you can create a control data record for the configuration control in STEP 7 (TIA Portal).

To create a control data record for the configuration control, follow these steps:

1. Create a PLC data type that contains the structure of the control data record for an ET 200AL interface module.
   You can find the structure of the control data record in section Control data record for the ET 200AL distributed I/O system (Page 95)

CTR_REC

	Name	Data type	Default value	A...	W...	V..	S...	Comment
1	Block_Lenght	USInt	76	☑	☑	☑	☐	
2	Block_ID	USInt	196	☑	☑	☑	☐	
3	Version	USInt	2	☑	☑	☑	☐	
4	Subversion	USInt	1	☑	☑	☑	☐	
5	ET-Connection1	Struct		☑	☑	☑	☐	ET-Connection1 slots 2-17
6	Topology module	USInt	1	☑	☑	☑	☐	ET-Connection1 topology module
7	Reserved 1	USInt	0	☑	☑	☑	☐	
8	Slot 2	USInt	2	☑	☑	☑	☐	assigned "real" slot
9	Reserved 2	USInt	0	☑	☑	☑	☐	
10	Slot 3	USInt	3	☑	☑	☑	☐	assigned "real" slot
11	Reserved 3	USInt	0	☑	☑	☑	☐	
12	Slot 4	USInt	4	☑	☑	☑	☐	assigned "real" slot
13	Reserved 4	USInt	0	☑	☑	☑	☐	
14	Slot 5	USInt	5	☑	☑	☑	☐	assigned "real" slot
15	Reserved 5	USInt	0	☑	☑	☑	☐	
		USInt	6	☑	☑	☑	☐	assigned "real" slot

Figure 10-3 Creating control data record 196

2. Create a global data block.
3. Create an array of the data type of the above created PLC data type in the data block.
   The following figure shows a data block containing the control data records for an ET200AL interface module. In this example the data block contains three control data records.

ConfDB

	Name	Data type	Start value	R..	A...	V..	S...	Comment
1	Static			☐	☐	☐	☐	
2	Option	Int	0	☑	☑	☑	☐	Selection of record
3	ConfigControl	Array[0..2] of "CTR_REC"		☐	☑	☑	☐	
4	ConfigControl[0]	"CTR_REC"		☐	☑	☑	☐	
5	ConfigControl[1]	"CTR_REC"		☐	☑	☑	☐	
6	Block_Lenght	USInt	36	☐	☑	☑	☐	4+number of slots

Figure 10-4 Data block for configuration control

4. In the "Start value" column of the control data records, enter which module is located at which slot.

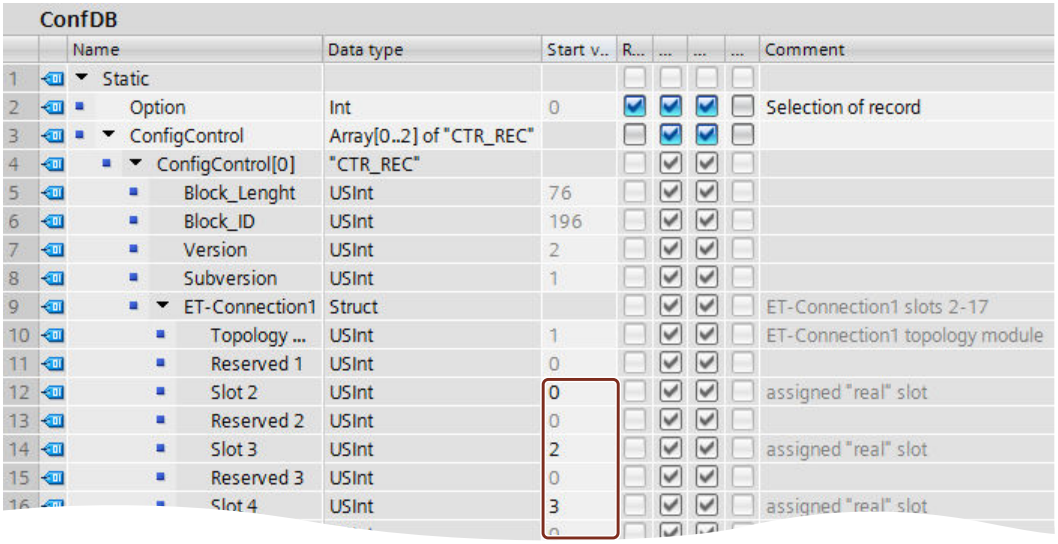

ConfDB

	Name	Data type	Start v...	R...	...	...	...	Comment
1	Static							
2	Option	Int	0	☑	☑	☑	☐	Selection of record
3	ConfigControl	Array[0..2] of "CTR_REC"		☐	☑	☑	☐	
4	ConfigControl[0]	"CTR_REC"			☑	☑		
5	Block_Lenght	USInt	76		☑	☑		
6	Block_ID	USInt	196		☑	☑		
7	Version	USInt	2		☑	☑		
8	Subversion	USInt	1		☑	☑		
9	ET-Connection1	Struct			☑	☑		ET-Connection1 slots 2-17
10	Topology ...	USInt	1		☑	☑		ET-Connection1 topology module
11	Reserved 1	USInt	0		☑	☑		
12	Slot 2	USInt	0		☑	☑		assigned "real" slot
13	Reserved 2	USInt	0		☑	☑		
14	Slot 3	USInt	2		☑	☑		assigned "real" slot
15	Reserved 3	USInt	0		☑	☑		
16	Slot 4	USInt	3		☑	☑		assigned "real" slot

Figure 10-5 Assigning slots

Rules

Observe the following rules:

- Slot entries in the control data record outside the station master are ignored by the interface module.
- The control data record must contain the entries up to the last slot of the station option.
- Each slot of a station option may only be present once in the control data record.
- Each slot of a station option may only be assigned to one slot in the station master.
- The interface module (slot 0) is not an element of the configuration control, but instead controls this.
- The topology modules always have to exist in the data record:
  - The topology module ET-Connection 1 is always located on Slot 1.
  - The topology module ET-Connection 2 is always located on Slot 18.

10.3.2 Control data record for the ET 200AL distributed I/O system

Slot assignment

NOTE

Topology modules ET-Connetion1 and ET-Connection2

Both topology modules ET-Connection1 and ET-Connection2 should be treated like real modules during configuration control.

Restriction: ET-Connetion1 is always placed in Slot 1 and ET-Connection2 is always placed in Plot 18.

The following table shows the possible slots for the various modules for an ET 200AL interface module:

Table 10-1 Slot assignment

Modules	Possible slots	Comment
Topology ET-Connection1	1	The topology module ET-Connection 1 is always located on Slot 1.
I/O modules ET-Connection1	2-17	-
Topology module ET-Connection2	18	The topology module ET-Connection2 is always located on Slot 18.
I/O modules ET-Connection2	19-34	-

Control data record

For configuration control of the ET 200AL distributed I/O system, you define a control data record 196 V2.1, which contains a slot assignment for the modules. The table below shows the structure of a control data record with explanations of the individual elements.

Table 10-2 Configuration control: Structure of control data record 196

Byte	Element	Code	Explanation
0	Block length	4 + (number of slots x 2)	Header
1	Block ID	196	
2	Version	2	
3	Subversion	1	
4	Slot topology module ET-Connection1	1 The topology module ET-Connection 1 is always located on Slot 1.	**Control element** Contains information on which module is inserted in which slot. The following rule determines which value you must enter in the respective byte: • If the module is included in the station option, enter the slot number of the module. • If the module does not exist in the station option, enter 0.
5	Reserved		
6	Slot 2 of the station master	Slot assignment in the station option	
7	Reserved		
:	:	:	

Byte	Element	Code	Explanation
38	Slot topology module ET-Connection2	18 The topology module ET-Connection2 is always located on Slot 18	
39	Reserved		
40	Slot 19 of the station master	Slot assignment in the station option	
41	Reserved		
:	:	:	
4 + ((max. slot - 1) x 2))	Maximum slot of the station master	Slot assignment in the station option	
5 + ((max. slot - 1) x 2))	Reserved		

Combination of configuration control and shared device (for PROFINET)

The configuration control function in a shared device is therefore only for the I/O modules of the IO controller to which the interface module has subscribed. I/O modules that are assigned to no controller or a different controller behave like a station without activated configuration control.

In the control data record change the slots only for those modules that are assigned to the IO-Controller.

In the control data record do not move modules to slots that are assigned to a different IO controller or no IO controller. The interface module does not check whether a control data record 196 exists for these slots. The interface module assumes a 1-to-1 assignment for these slots.

Combination of configuration control and PROFIenergy (at PROFINET)

You can use configuration control together with PROFIenergy for the ET 200AL distributed I/O system.

Ensure that you use the slots of the used station option when creating Data record 3. Do not use the slots configured in the station master.

Example: You want to set up PROFIenergy for a DQ module of an IM 157-1 PN that works with configuration control. You have configured the DQ module to Slot 5 in the station master. You have moved the DQ module to Slot 2 in the station option. In order to set up PROFIenergy for this module use Slot 2 in Data record 3.

You can find more information about PROFIenergy in the Interface module IM 157-1 PN (https://support.industry.siemens.com/cs/ww/en/view/89254863) Equipment Manual.

10.3.3 Feedback data record at the ET200AL distributed I/O system

Operating principle

The feedback data record informs you about the accuracy of the module assignment and gives you the option of detecting assignment errors in the control data record. The feedback data record is mapped via a separate data record 197 V2.0.

Feedback data record

The feedback data record exists only when configuration control is configured and always refers to the maximum configuration limits **without interface module**, i.e., 34 slots. Partial reading of the feedback data record is possible.

Table 10-3 Feedback data record

Byte	Element	Code	Explanation
0	Block length	66	Header
1	Block ID	197	
2	Version	2	
3		0	
4	Slot 1 status	0/1	Status = 1: • Module from station master is inserted in the station option • Slot is marked as not available in the control data record Status = 0: • Module pulled • Incorrect module inserted in the station option*
5	Reserved	0	
6	Status slot 2	0/1	
7	Reserved	0	
:	:	:	
70	Status Slot 34	0/1	
71	Reserved	0	

* Not possible if the slot is marked as not available.

NOTE

The data in the feedback data record is always mapped for all modules. In a Shared Device configuration, it is therefore irrelevant which IO controller the respective modules are assigned to.

As long as no control data record was sent, a one-to-one module assignment is assumed for the compilation of data record 197 (station master → station option).

Error messages

In the case of an error when reading the feedback data record, the RDREC instruction returns the following error messages via the STATUS block parameter:

Table 10-4 Error messages

Error code	Meaning
$80B1_H$	Invalid length; the length information in data record 197 is not correct.
$80B5_H$	Configuration control not configured
$80B8_H$	Parameter error The following events cause a parameter error: • Incorrect block ID in the header (not equal to 197) • Invalid version identifier in the header • A reserved bit was set • Multiple slots in the station master are assigned to the same slot in the station option

10.3.4 Example of a configuration control

Introduction

Several options/functional variations often exist for machines designed as series products. Or you have a plant that can operate in different modes.
Combine the modules that are needed for a function. With configuration control (option handling), you have the option to switch these functions on and off or expand their configuration.
The following examples show how you can form the control data record for a station option. The station master consists of an interface module IM 157-1 PN and 15 I/O modules in this case.

Station option with associated control data record

The configuration with the station options 2 and 4 differ from the station master as follows:

- The modules for options 1 and 3 do not exist.

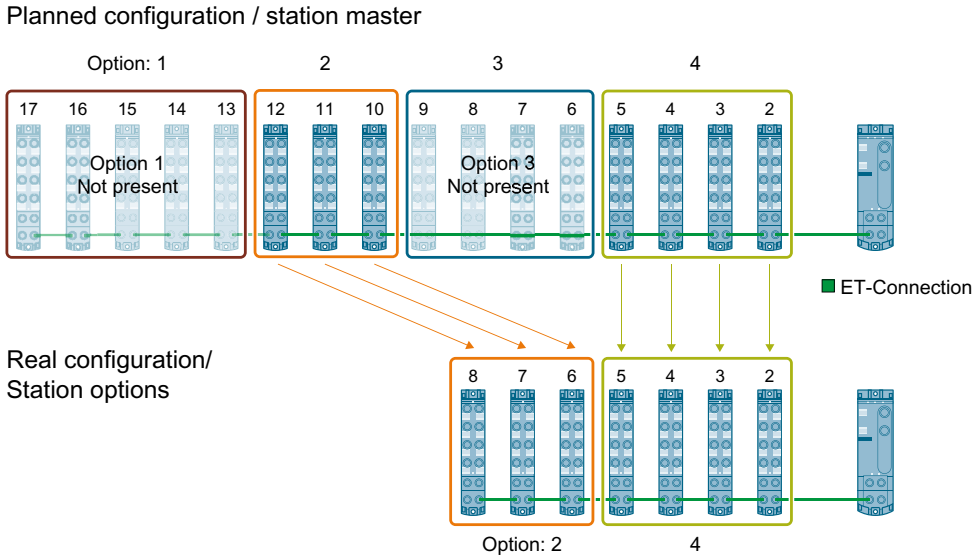

9	ET-Connection1	Struct			ET-Connection1 slots 2-17
10	Topology ...	USInt		1	ET-Connection1 topology module
11	Reserved 1	USInt		0	
12	Slot 2	USInt		2	assigned "real" slot
13	Reserved 2	USInt		0	
14	Slot 3	USInt		3	assigned "real" slot
15	Reserved 3	USInt		0	
16	Slot 4	USInt		4	assigned "real" slot
17	Reserved 4	USInt		0	
18	Slot 5	USInt		5	assigned "real" slot
19	Reserved 5	USInt		0	
20	Slot 6	USInt		0	assigned "real" slot
21	Reserved 6	USInt		0	
22	Slot 7	USInt		0	assigned "real" slot
23	Reserved 7	USInt		0	
24	Slot 8	USInt		0	assigned "real" slot
25	Reserved 8	USInt		0	
26	Slot 9	USInt		0	assigned "real" slot
27	Reserved 9	USInt		0	
28	Slot 10	USInt		6	assigned "real" slot
29	Reserved 10	USInt		0	
30	Slot 11	USInt		7	assigned "real" slot
31	Reserved 11	USInt		0	
32	Slot 12	USInt		8	assigned "real" slot
33	Reserved 12	USInt		0	
34	Slot 13	USInt		0	assigned "real" slot
35	Reserved 13	USInt		0	
36	Slot 14	USInt		0	assigned "real" slot
37	Reserved 14	USInt		0	
38	Slot 15	USInt		0	assigned "real" slot
39	Reserved 15	USInt		0	
40	Slot 16	USInt		0	assigned "real" slot
41	Reserved 16	USInt		0	
42	Slot 17	USInt		0	assigned "real" slot
43	Reserved 17	USInt		0	

Figure 10-6 Example: Hardware configuration of Station option 2 and 4 with the associated control data record in STEP 7

Extension by a station option

The following figure shows the configuration with the Station options 2 and 4 that has subsequently been extended by the Station option 3.
The modules of option 3 are added to the modules already existing.

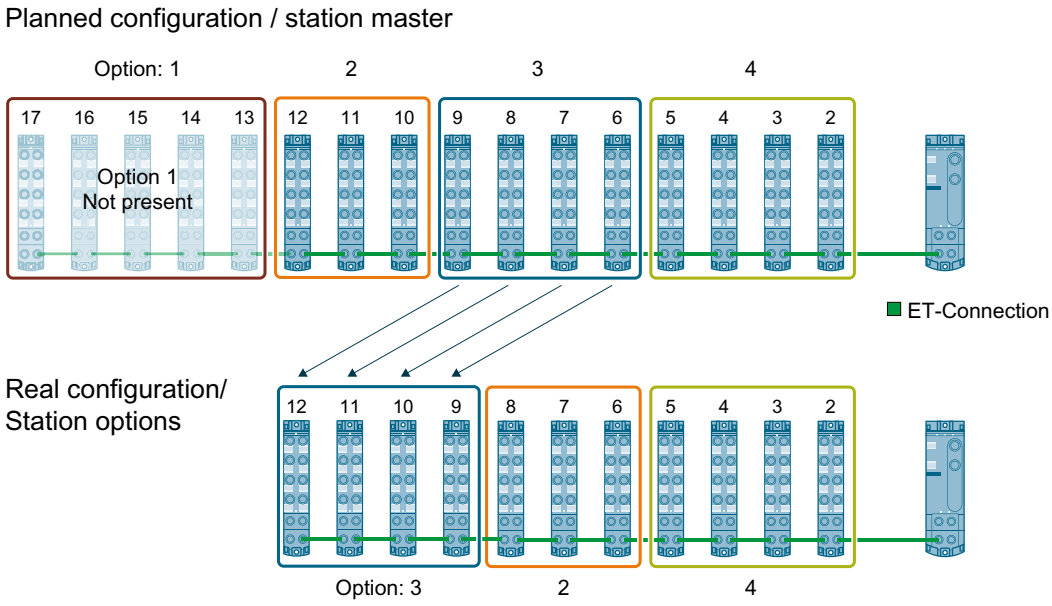

10		ET-Connection1	Struct		ET-Connection1 slots 2-17
11		Topology module	USInt	1	ET-Connection1 topology module
12		Reserved 1	USInt	0	
13		Slot 2	USInt	2	assigned "real" slot
14		Reserved 2	USInt	0	
15		Slot 3	USInt	3	assigned "real" slot
16		Reserved 3	USInt	0	
17		Slot 4	USInt	4	assigned "real" slot
18		Reserved 4	USInt	0	
19		Slot 5	USInt	5	assigned "real" slot
20		Reserved 5	USInt	0	
21		Slot 6	USInt	9	assigned "real" slot
22		Reserved 6	USInt	0	
23		Slot 7	USInt	10	assigned "real" slot
24		Reserved 7	USInt	0	
25		Slot 8	USInt	11	assigned "real" slot
26		Reserved 8	USInt	0	
27		Slot 9	USInt	12	assigned "real" slot
28		Reserved 9	USInt	0	
29		Slot 10	USInt	6	assigned "real" slot
30		Reserved 10	USInt	0	
31		Slot 11	USInt	7	assigned "real" slot
32		Reserved 11	USInt	0	
33		Slot 12	USInt	8	assigned "real" slot
34		Reserved 12	USInt	0	
35		Slot 13	USInt		assigned "real" slot

Figure 10-7 Example: Hardware configuration of station option 2 to 4 with the associated control data record in STEP 7

Detailed application example

You can find a detailed application example for the configuration control in S7-1500 in here under the keyword "Application example for ET 200SP (PROFINET) and S7-1500 based on the library" on the Internet (https://support.industry.siemens.com/cs/ww/en/view/29430270).

10.4 Transferring the control data record in the user program of the CPU

Required steps

Transfer the created control data record 196 to the interface module using the WRREC (Write data record) instruction.

Parameters of the WRREC instruction

Below, you will find explanations of individual parameters of the WRREC instruction which you must supply with specific values in the configuration control context. You can find additional information on the WRREC instruction in the STEP 7 online help.

ID	HW identifier of the interface module. If you have selected the interface module in the network view or device view, the HW identifier is available in the **System constants** tab of the Inspector window. Use the value of the system constant "<Name_of_interface_module> Head".
INDEX	Data record number: 196 (decimal)
RECORD	Control data record to be transferred. You can find the structure of the control data record in section Control data record for the ET 200AL distributed I/O system (Page 95).

Selection of the station option in the user program

In order for the CPU to know which station option you want to operate, you must set up a possibility to select between the various control data records in the user program. You can implement the selection, for example, via an Int tag that references an array element. Note that the tag used to select the control data record must be stored in the retentive memory area. If the tag is not retentive, it will be initialized during startup of the CPU and will thus be unavailable for selection of the station option.

Special requirements relating to the transfer of the control data record to the interface module

- If you have enabled configuration control, the ET 200AL station is not ready for operation without a control data record. As long as no valid control data record has been transferred, the I/O modules are considered as failed by the CPU and exhibit substitute value behavior. The interface module continues to exchange data.
- The control data record is stored retentively in the interface module. Note:
  - If the configuration is unchanged, you do not have to rewrite the control data record 196 during restart.
  - If you write a control data record with modified configuration, this will result in a station failure in the distributed I/O system. The original data record 196 is deleted and the new data record 196 is saved retentively. The station will then restart with the modified configuration.

Error messages

In case of error, the WRREC instruction returns the following error messages via the STATUS block parameter:

Table 10-5 Error messages

Error code	Meaning
$80B1_H$	Invalid length; the length information in data record 196 is not correct.
$80B2_H$	Invalid slot: The configured slot is not assigned
$80B5_H$	Configuration control parameters not assigned.
$80B8_H$	Parameter error Reasons for a parameter error are: • Incorrect block ID in the header (not equal to 196) • Invalid version identifier in the header • A reserved bit was set • A station master slot was assigned an invalid slot in the station option • Multiple slots in the station master are assigned to the same slot in the station option • For shared device on submodule level: violation of defined restrictions
$80C5_H$	DP slave or module not available. Indicates that a data record has not been acknowledged due to the system.

If you receive the error code $80A2_H$, $80B2_H$ or $80C5_H$ when writing to control data record 196, check whether the required configuration was accepted despite the error code.

10.5 Behavior during operation

Effect of discrepancy between station master and station option

For the online display and for the display in the diagnostics buffer (module OK or module faulty), the station master is always used and not the differing station option.

Example: A module outputs diagnostics data. This module is configured in slot 4 in the station master, but is inserted in slot 3 in the station option (missing module; see example in the next section). The online view (station master) shows an incorrect module in slot 4. In the real configuration, the module in slot 3 indicates an error via an LED display.

Response to modules that are not present

If modules are entered as not present in the control data record, the automation system behaves as follows:

- Modules designated as not present in the control data record do not supply diagnostics and their status is always OK. The value status is OK.
- Direct writing access to the outputs that are not present or writing access to the process image of outputs that are not present: Remains without effect; no access error is signaled.
- Direct reading access to the inputs that are not present or reading access to the process image of inputs that are not present: Value "0" is supplied; no access error is signaled.
- Write data record to module that is not present: Remains without effect; no error is signaled.
- Read data record from module that is not present: The output parameter STATUS of the instruction RDREC supplies the value $80A3_H$ "General CM error".

11

Commissioning

11.1 PROFINET IO

11.1.1 Commissioning ET 200AL on PROFINET IO

Introduction

The commissioning of your distributed I/O system depends on the system configuration. The following procedure describes the commissioning of the ET 200AL distributed I/O system on an IO controller.

Requirements for the ET 200AL distributed I/O system on PROFINET IO

NOTE

Performing tests

You must ensure the safety of your plant. You therefore need to perform a complete functional test and the necessary safety checks before the final commissioning of a plant.

Also plan the tests to include any possible foreseeable errors. This will allow you to prevent people or plants from being placed in danger during operation.

Procedure

The following table shows the chapters/documents in which the required actions are described.

Table 11-1 Requirements for the ET 200AL distributed I/O system on PROFINET IO

Step	Procedure	See...
1	Mounting the ET 200AL interface module	Section Mounting (Page 52)
2	Wiring the ET 200AL interface module	Section Connecting (Page 57)
3	Configuring the ET 200AL interface module	Section Configuring (Page 83)

Step	Procedure	See...
4	Turning on the supply voltage for the ET 200AL interface module	Equipment Manual • IM 157-1 PN interface module (https://support.industry.siemens.com/cs/ww/en/view/89254863) • IM 157-1 MF interface module (https://support.industry.siemens.com/cs/ww/en/view/109824723)
5	ET 200AL interface module automatically switches to RUN mode	-

Reference

You can find additional information on assigning the PROFINET IO parameters in the PROFINET with STEP 7 V14 (https://support.industry.siemens.com/cs/ww/en/view/49948856) function manual.

11.1.2 Startup on PROFINET IO

Principle of operation

The figure below schematically shows the startup of the ET 200AL distributed I/O system on the PROFINET IO (= IO device) as a flow chart.

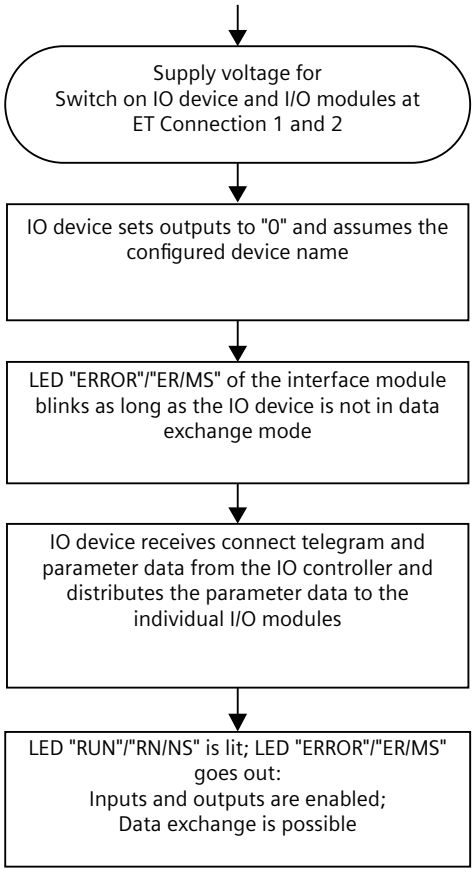

Figure 11-1 Startup of the ET 200AL distributed I/O system on the PROFINET IO

The figure below schematically shows the startup of an ET 200AL I/O module after an ET 200AL PROFINET interface module.

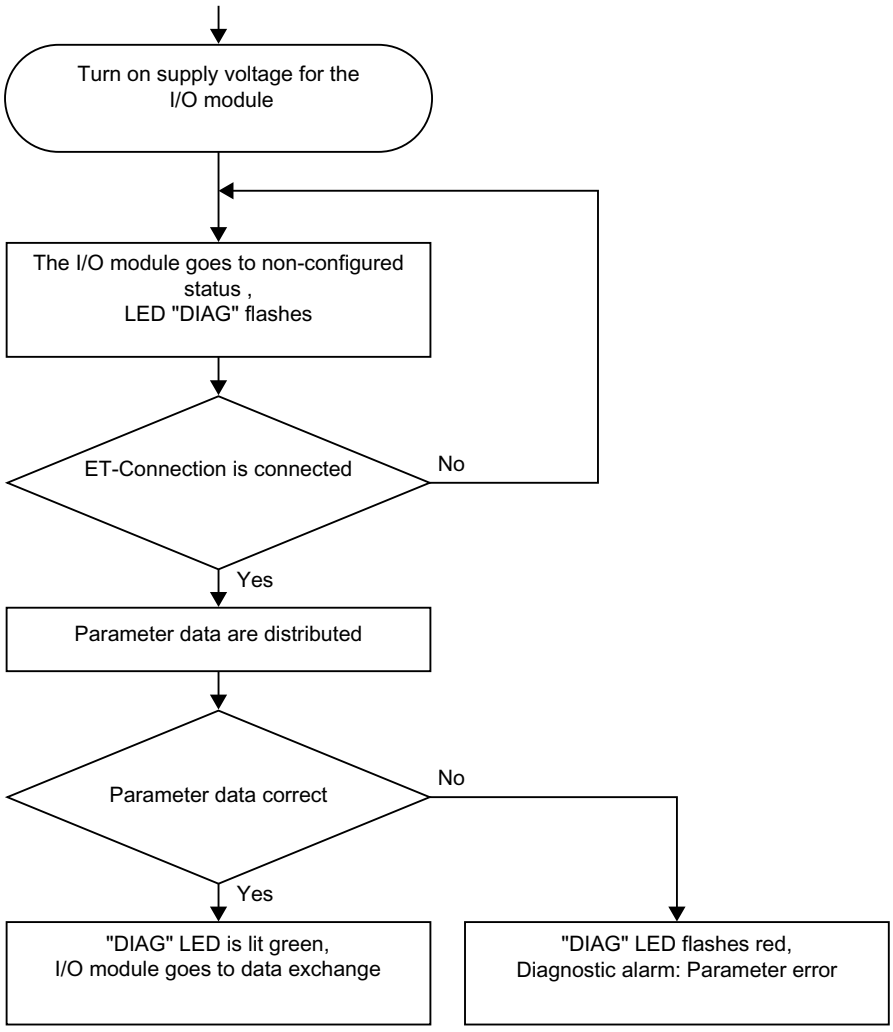

Figure 11-2 Startup of the ET 200AL I/O module

11.1.3 PROFIenergy

NOTE

PROFIenergy is not supported by fail-safe I/O module F-DI 4+F-DQ 2x24VDC/2A, 4xM12.

PROFIenergy (for PROFINET) makes it possible to reduce the energy consumption of the device using the PROFIenergy command during production downtime.

Additional information

You will find more information on the Internet (https://www.profibus.com) under Common Application Profile PROFIenergy; Technical Specification for PROFINET; as well as in the following documentation:

- IM 157-1 PN interface module (https://support.industry.siemens.com/cs/ww/en/view/89254863) manual
- I/O modules (https://support.industry.siemens.com/cs/ww/en/ps/14247/man) manuals
- PROFINET System Description (https://support.industry.siemens.com/cs/ww/en/view/19292127) system manual
- PROFINET with STEP 7 V14 (https://support.industry.siemens.com/cs/ww/en/view/49948856), function manual, Section: Saving energy with PROFIenergy
- Application guide for implementation of shutdown concepts with PROFIenergy. (https://support.industry.siemens.com/cs/ww/en/view/96837137)
- Saving energy with SIMATIC S7 (STEP 7 as of V5.5) (https://support.industry.siemens.com/cs/ww/en/view/41986454)
- Saving energy with SIMATIC S7 and SIMATIC HMI (TIA Portal) (https://support.industry.siemens.com/cs/ww/en/view/58235225)
- SIMATIC S7 library for simple configuration of PROFIenergy. (https://support.industry.siemens.com/cs/ww/en/view/109478388)
- You can find additional information on the PROFIenergy FBs ("PE_START_END" - FB 815, "PE_CMD" - FB 816) in the online help for STEP 7 V5.5 as of SP2, Help on system functions/function blocks.

11.2 EtherNet/IP

11.2.1 Commissioning the ET 200AL on EtherNet/IP

Introduction

The commissioning of your distributed I/O system depends on the system configuration. The following procedure describes the commissioning of the ET 200AL distributed I/O system on an scanner.

Requirements for the ET 200AL distributed I/O system on EtherNet/IP

NOTE

Performing tests

You must ensure the safety of your plant. You therefore need to perform a complete functional test and the necessary safety checks before the final commissioning of a plant.

Also plan the tests to include any possible foreseeable errors. This will allow you to prevent people or plants from being placed in danger during operation.

Procedure

The following table shows the chapters/documents in which the required actions are described.

Table 11-2 Requirements for the ET 200AL distributed I/O system on EtherNet/IP

Step	Procedure	See...
1	Mounting the ET 200AL interface module	Section Mounting (Page 52)
2	Wiring the ET 200AL interface module	Section Connecting (Page 57)
3	Configuring the ET 200AL interface module	Section Configuring (Page 83)
4	Turning on the supply voltage for the ET 200AL interface module	IM 157-1 MF interface module (https://support.industry.siemens.com/cs/ww/en/view/109824723) equipment manual
5	ET 200AL interface module automatically switches to RUN mode	-

Reference

You can find additional information about the configuration of the parameters of EtherNet/IP in the function manual MultiFieldbus function manual (https://support.industry.siemens.com/cs/ww/en/view/109773209).

11.2.2 Startup on EtherNet/IP

Principle of operation

The following figure shows a schematic flow chart of the startup of the ET 200AL distributed I/O system on EtherNet/IP. The interface module is in the network of the EtherNet/IP adapter and communicates with the scanner.

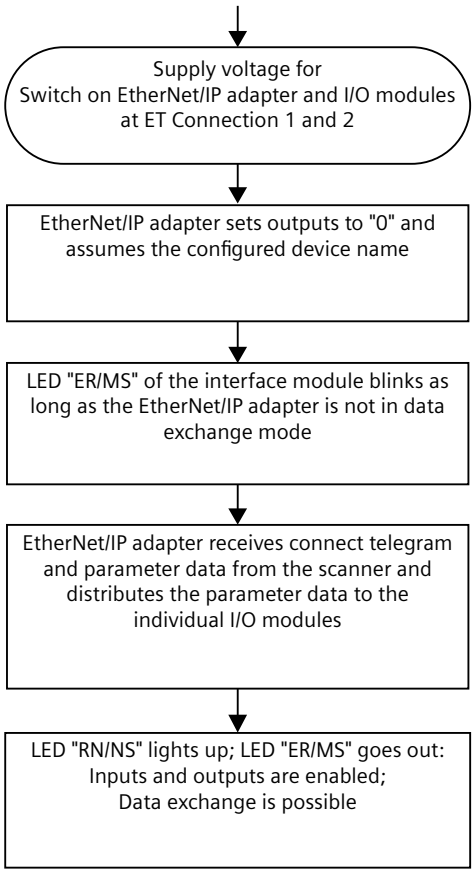

Figure 11-3 Startup of the ET 200AL distributed I/O system on EtherNet/IP

The figure below schematically shows the startup of an ET 200AL I/O module after an ET 200AL EtherNet/IP interface module as a flow chart.

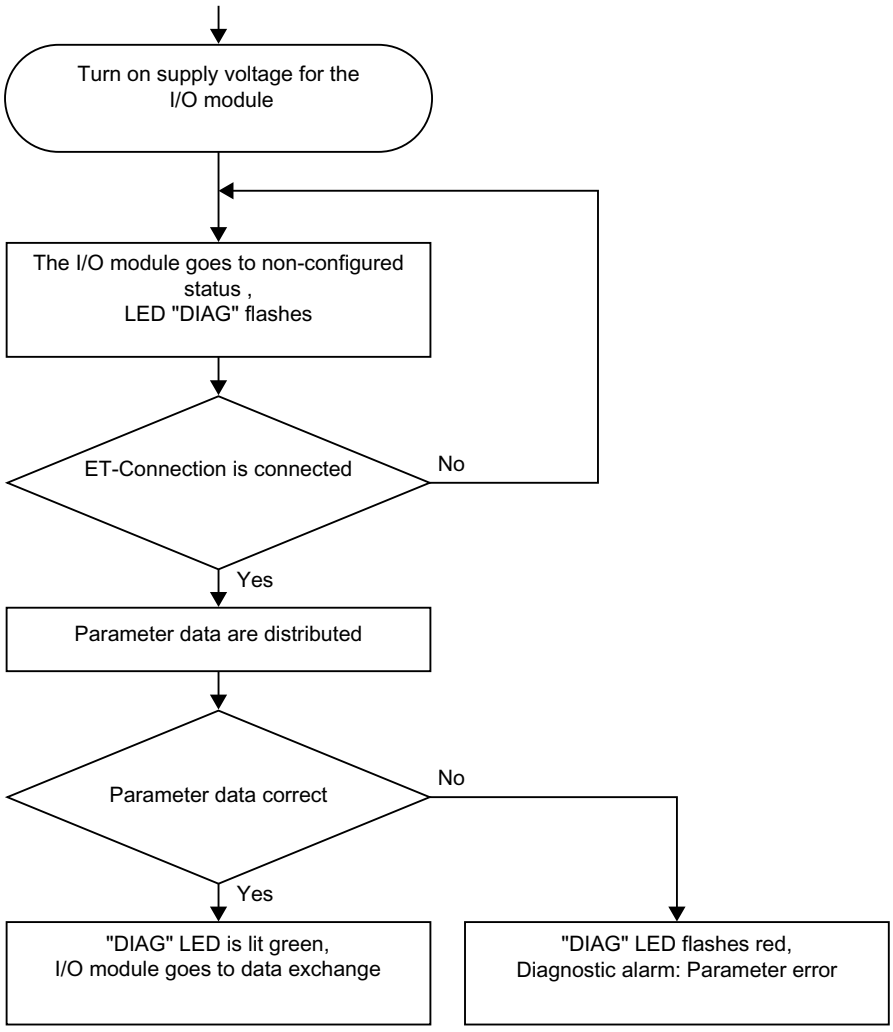

Figure 11-4 Startup of an ET 200AL I/O module

11.3 Modbus TCP

11.3.1 Commissioning the ET 200AL on Modbus TCP

Introduction

The commissioning of your distributed I/O system depends on the system configuration. The following procedure describes the commissioning of the ET 200AL distributed I/O system on a Modbus client.

Requirements for the ET 200AL distributed I/O system on Modbus TCP

NOTE

Performing tests

You must ensure the safety of your plant. You therefore need to perform a complete functional test and the necessary safety checks before the final commissioning of a plant.

Also plan the tests to include any possible foreseeable errors. This will allow you to prevent people or plants from being placed in danger during operation.

Procedure

The following table shows the chapters/documents in which the required actions are described.

Table 11-3 Requirements for the ET 200AL distributed I/O system on Modbus TCP

Step	Procedure	See...
1	Mounting the ET 200AL interface module	Section Mounting (Page 52)
2	Wiring the ET 200AL interface module	Section Connecting (Page 57)
3	Configuring the ET 200AL interface module	Section Configuring (Page 83)
4	Turning on the supply voltage for the ET 200AL interface module	Equipment manual IM 157-1 MF interface module (https://support.industry.siemens.com/cs/ww/en/view/109824723)
5	ET 200AL interface module automatically switches to RUN mode	-

Reference

You can find additional information about configuring the parameters of Modbus TCP in the function manual MultiFieldbus function manual (https://support.industry.siemens.com/cs/ww/en/view/109773209).

11.3.2 Startup on Modbus TCP

Principle of operation

The following figure shows as flow chart schematically the start-up of the ET 200AL distributed I/O system on Modbus TCP. The interface module is the Modbus TCP server in the network and communicates with the client.

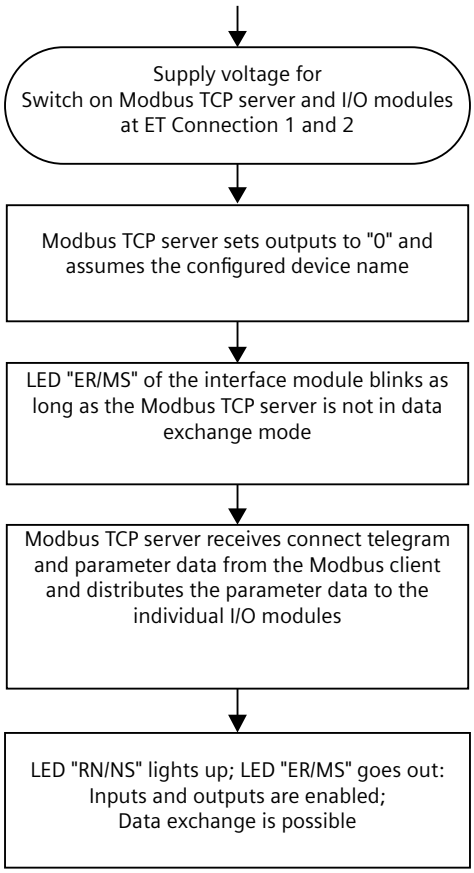

Figure 11-5 Startup of the ET 200AL distributed I/O system on Modubus TCP

The figure below schematically shows the startup of an ET 200AL I/O module after an ET 200AL Modubus TCP interface module as a flow chart.

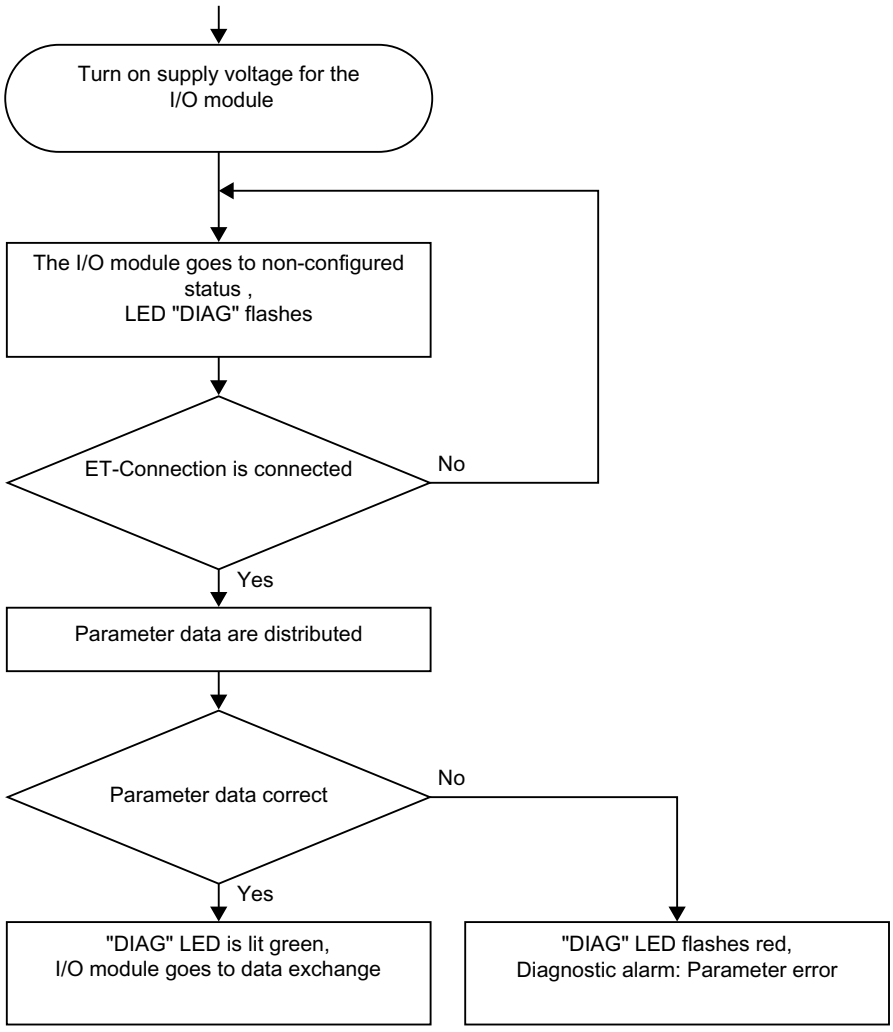

Figure 11-6 Startup of the ET 200AL I/O module

11.4 PROFIBUS DP

11.4.1 Commissioning ET 200AL on PROFIBUS DP

Introduction

The commissioning of your distributed I/O system depends on the system configuration. The following procedure describes the commissioning of the ET 200AL distributed I/O system on a DP master.

Requirements for the ET 200AL distributed I/O system on a PROFIBUS DP

NOTE

Performing tests

You must ensure the safety of your plant. You therefore need to perform a complete functional test and the necessary safety checks before the final commissioning of a plant.

Also plan the tests to include any possible foreseeable errors. This helps to avoid endangering persons or equipment during operation.

Procedure

The following table shows the chapters/documents in which the required actions are described.

Table 11-4 Requirements for the ET 200AL distributed I/O system on a PROFIBUS DP

Step	Procedure	See...
1	Mounting the ET 200AL interface module	Section Mounting (Page 52)
2	Setting the PROFIBUS DP address on the ET 200AL PROFIBUS interface module	IM 157-1 DP interface module (https://support.industry.siemens.com/cs/ww/en/view/89255073) manual, section Setting the PROFIBUS DP address and terminating resistor
3	Wiring the ET 200AL interface module	Section Connecting (Page 57)
4	Configuring the ET 200AL interface module	Section Configuring (Page 83)
5	Switching on the supply voltage for the ET 200AL interface module	IM 157-1 DP interface module (https://support.industry.siemens.com/cs/ww/en/view/89255073) manual
6	ET 200AL interface module automatically switches to RUN mode	-

11.4.2 Startup on PROFIBUS DP

Principle of operation

The figure below schematically shows the startup of the ET 200AL distributed I/O system on the PROFIBUS DP (= DP slave) as a flow chart.

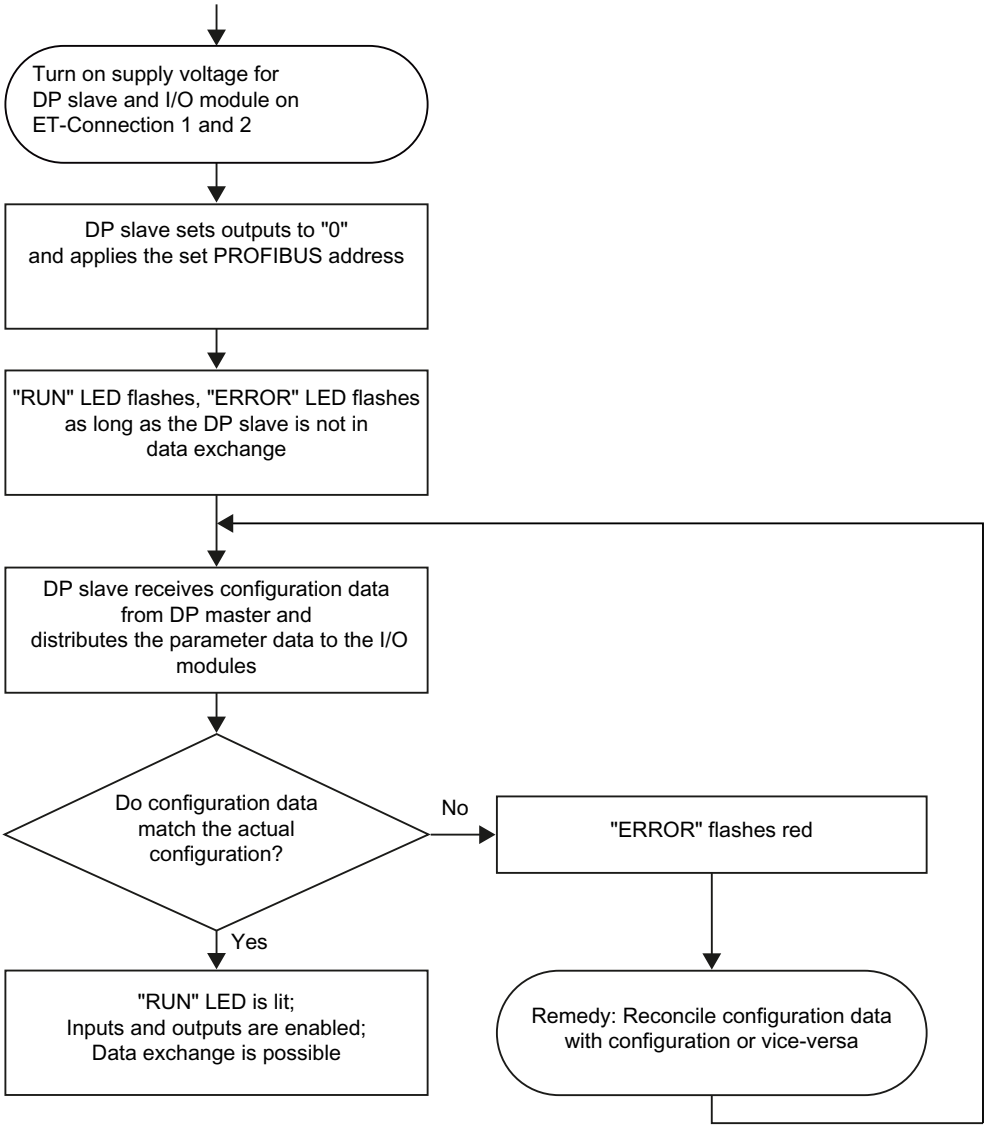

Figure 11-7 Startup of the ET 200AL distributed I/O system on PROFIBUS DP

The figure below schematically shows the startup of an ET 200AL I/O module after an ET 200AL PROFIBUS interface module as flow chart.

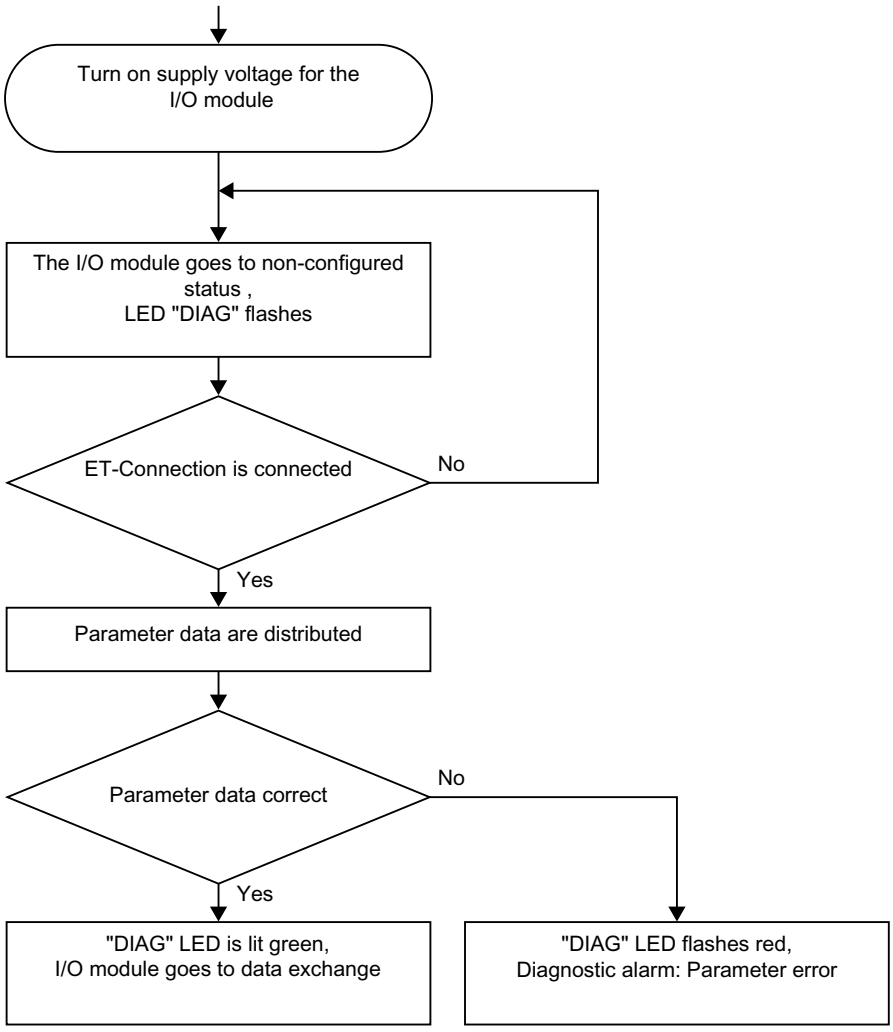

Figure 11-8 Startup of an ET 200AL I/O module

11.5 Identification and maintenance data

11.5.1 Reading out and entering I&M data

Introduction

Identification data I&M is information that is saved either as read-only (I data) or read/write (M data) on the interface module.

Identification data (I&M0): Manufacturer information on the module that is read-only and in some cases is also printed on the module housing, for example, article number, serial number and firmware version.

Maintenance data (I&M1, 2, 3): Plant-dependent information, e.g. installation location. Maintenance data is created during configuration and written to the module.

All modules of the ET 200AL distributed I/O system support identification data (I&M0 to I&M3).

The I&M identification data supports you in the following activities:

- Checking the plant configuration
- Locating hardware changes in a system
- Correcting errors in a system

With the I&M identification data, you have the option of clearly identifying modules online.

Maintenance data (I&M4): Storage of a CRC test value for interface modules IM 157-1 PN and IM 157-1 MF and to ensure data integrity of data used by the interface module.

In STEP 7, the identification data is displayed in the "Module status - IM 157" and "Properties..." tabs (see STEP 7 online help).

Options for reading out I&M data

You have the following options for reading the I&M data:

- Via the user program
- Via STEP 7 or HMI devices

Procedure for reading I&M data by means of the user program

To read the I&M data of the interface module in the user program, use the instruction "RDREC".

Procedure for reading the I&M data using STEP 7

Requirement: There must be an online connection to the interface module.

1. In the project navigation, under "Distributed I/O", select the I/O device or the DP slave, e.g. "IM 157-1 PN".
2. Select: **IO device/DP slave > Online & Diagnostics > Identification & Maintenance**.

Procedure for input of maintenance data using STEP 7

The default module name is assigned by STEP 7. You have the option to enter the following data:

- Plant designation (I&M1)
- Location identifier (I&M1)
- Installation date (I&M2)
- Additional information (I&M3)
- Signature (I&M4), only for PROFINET

To enter the data, follow these steps:

1. In the device view of the STEP 7 hardware network editor, select the interface module, for example.
2. In the properties under "General", select the "Identification & Maintenance" area and enter the data.

During the loading of the hardware configuration, the I&M data are also loaded.

Reference

You can find additional information on I&M data of the ET 200SP (mixed configuration) in the ET 200SP distributed I/O system (https://support.industry.siemens.com/cs/ww/en/view/58649293) system manual.

11.5.2 Data record structure for I&M data

Reading I&M data records (distributed via PROFINET IO)

You can directly access specific identification data by selecting **Read data record** ("RDREC" instruction). You obtain the corresponding part of the identification data under the associated data record index.

The following table shows the principle behind the structure of data records.

Table 11-5 Basic structure of data records with I&M identification data

Contents	Length (bytes)	Coding (hex)
Header information		
BlockType	2	I&M0: 0020_H I&M1: 0021_H I&M2: 0022_H I&M3: 0023_H I&M4: 0024_H
BlockLength	2	I&M0: 0038_H I&M1: 0038_H I&M2: 0012_H I&M3: 0038_H I&M4: 0038_H
BlockVersionHigh	1	01

Contents	Length (bytes)	Coding (hex)
BlockVersionLow	1	00
Identification data		
Identification data (see table below)	54 54 16 54 54	I&M0/Index $AFF0_H$ I&M1/Index $AFF1_H$ I&M2/Index $AFF2_H$ I&M3/Index $AFF3_H$ I&M4/Index $AFF4_H$

The following table shows the structure of data records for I&M identification data.

Table 11-6 Data record structure for I&M identification data

Identification data	Access	Default	Explanation
Identification data 0: (data record index AFF0 hex)			
VendorIDHigh	read (1 byte)	00_H	This is where the name of the manufacturer is stored (42_D = SIEMENS AG).
VendorIDLow	read (1 byte)	$2A_H$	
Order_ID	read (20 bytes)	6ES7157-1MA00-0AB0	Article number of module (e.g. IM 157-1 MF)
IM_SERIAL_NUMBER	read (16 bytes)	-	Serial number (device-specific)
IM_HARDWARE_REVISION	read (2 bytes)	1	Corresponding hardware version
IM_SOFTWARE_REVISION	read	Firmware version	Provides information about the firmware version of the module
• SWRevisionPrefix	(1 byte)	V	
• IM_SWRevision_Functional_Enhancement	(1 byte)	00 - FF_H	
• IM_SWRevision_Bug_Fix	(1 byte)	00 - FF_H	
• IM_SWRevision_Internal_Change	(1 byte)	00 - FF_H	
IM_REVISION_COUNTER	read (2 bytes)	0000_H	provides information about configured changes on the module (not used)
IM_PROFILE_ID	read (2 bytes)	0000_H	Generic device
IM_PROFILE_SPECIFIC_TYPE	read (2 bytes)	0005_H	Interface modules
IM_VERSION	read	0101_H	provides information about the version of the identification data (0101_H = Version 1.1)
• IM_Version_Major	(1 byte)		
• IM_Version_Minor	(1 byte)		
IM_SUPPORTED	read (2 bytes)	$001E_H$	provides information about the existing identification data (I&M1 though I&M4)
Maintenance data 1: (data record index AFF1 hex)			
IM_TAG_FUNCTION	Read/write (32 bytes)	-	Enter an identifier for the module here, that is unique plant-wide.
IM_TAG_LOCATION	Read/write (22 bytes)	-	Enter the installation location of the module here.
Maintenance data 2: (data record index AFF2 hex)			

* A value of 0 indicates that the IM firmware does not yet support the CRC calculation of the assigned modules.
If the value is ≠ 0, the IM supports this function, regardless of whether the associated modules support I&M4 data.

Identification data	Access	Default	Explanation
IM_DATE	Read/write (16 bytes)	YYYY-MM-DD HH:MM	Enter the installation date of the module here.
Maintenance data 3: (data record index AFF3 hex)			
IM_DESCRIPTOR	Read/write (54 bytes)	-	Enter a comment describing the module.
Maintenance data 4: (data record index AFF4 hex)			
USI	Read (4 bytes)	0x63726331	UserstructureIdentifier: Internal, fixed value
CHK_OVERALL	Read (4 bytes)	-	Overall CRC via all individual CRCs
CHK_OVERALL_SUBS	Read (4 bytes)	0 or value*	Overall CRC via all assigned modules of the IM
CHK_STATIC_LOCAL	Read (4 bytes)	-	CRC via static data of the IM
CHK_STATIC_SUBS	Read (4 bytes)	0 or value*	CRC via all static data of the modules of the IM
CHK_OVERALL_SETUP	Read (4 bytes)	-	Overall CRC via all setup data of the IM and modules of the IM
CHK_REMANENT_LOCAL	Read (4 bytes)	-	CRC via retentive data of the IM
CHK_REMANENT_SUBS	Read (4 bytes)	0 or value*	CRC via all retentive data of the modules of the IM
CHK_WORKING_LOCAL	Read (4 bytes)	-	CRC via the parameters in STEP 7 for the IM
CHK_WORKING_SUBS	Read (4 bytes)	0 or value*	CRC via all parameters in STEP 7 for the modules of the IM
NOT USED	Read (14 bytes)	0	14 reserved bytes

* A value of 0 indicates that the IM firmware does not yet support the CRC calculation of the assigned modules.
If the value is ≠ 0, the IM supports this function, regardless of whether the associated modules support I&M4 data.

Reading I&M data records with data record 255 (distributed via PROFIBUS DP)

The modules support standardized access to identification data using DR 255 (index 65000 to 65003). For additional information on the DR 255 data structure, refer to the specifications of the Profile Guideline - Order No. 3.502.

12

Maintenance

12.1 Replacing modules

Replacing modules

Replacing a module is not permitted during ongoing operation.

⚠ WARNING

Material damage can occur

If you remove/insert modules with the power connected, this can lead to undefined states in your system.

Material damage to the ET 200AL distributed I/O system may occur as a result.

Only remove or replace modules when the power is disconnected.

Always comply with the required standards and safety guidelines when configuring a system.

⚠ WARNING

Mixing up ET-Connection1 and ET-Connection2

When connecting the modules, always ensure that they are properly connected.

If you mix up the lines for ET-Connection1 and ET-Connection2 when connecting the modules, this can lead to undefined states in your system.

Behavior of ET-Connection

During ongoing operation, a module replacement may be necessary, e.g. because the module is defective. If an I/O module fails in an ET-Connection line, the line remains active up to the failed I/O module. After replacing the I/O module, the ET-Connection line starts up by itself.

Procedure

To replace a module, proceed as follows:

1. Disconnect the supply voltage to the module to be replaced.
2. Completely remove all cables connected to the module.
3. Completely remove the fixing screws of the module
4. Replace the module.

NOTE
"New" module
The removed module may only be replaced by a module of the same type.

5. Fasten the module with a torque of 1.2 Nm.
6. Connect all cables.
7. Turn the supply voltage on.

WARNING

Pay attention to the slot number of the module

If you mix up the ET 200AL I/O modules when connecting them, this can cause personal injury and damage to the machine.

The ET 200AL distributed I/O system cannot distinguish between modules of the same type during the actual/target comparison.

We recommend that you clearly label the ET 200AL I/O modules with the slot number.

The figure below shows a recommendation for labeling the ET 200AL I/O modules with the slot number.

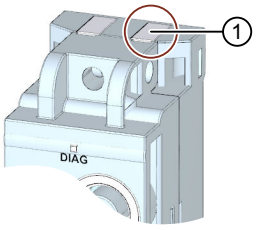

① Recommendation for labeling the slot number

Figure 12-1 Slot number

Result

The disconnected I/O module and all downstream I/O modules start up again by themselves.

12.2 Firmware update

Introduction

During operation, it can become necessary to update the firmware (e.g. for function extensions).
Firmware updates are used to update the firmware of the interface module and I/O modules.

NOTE

Temporary bus interruption

When you perform a firmware update of an ET 200AL I/O module, then the ET-Connection is temporarily interrupted due to the restart of I/O module. All downstream ET 200AL I/O modules report a pull/plug interrupt.

Options for the firmware update

You have the following options to running a firmware update:

- Online via STEP 7, as of V5.5[1]
- Online with STEP 7, TIA Portal V13 or higher
- Embedded web server running on a SIMATIC CPU or a SIMATIC F-CPU with fail-safe modules.
- SIMATIC Automation Tool (SAT)
- Online via MFCT

[1)] Not for use with fail-safe ET 200AL I/O modules

NOTE

MultiFieldbus interface module remains in configured fieldbus mode

After a firmware update, the MultiFieldbus interface module remains in the bus protocol in which the update was installed.
If there is an update via EtherNet/IP, for example, the MultiFieldbus interface module remains in EtherNet/IP mode.

Reference

More information about the procedure:

- FAQs on the Internet (https://support.industry.siemens.com/cs/ww/en/view/88778936)
- STEP 7 online help
- MultiFieldbus function manual (https://support.industry.siemens.com/cs/ww/en/view/109773209) function manual

12.3 Resetting interface module to factory settings

This section applies to interface modules with one or more of these communication protocols:

- PROFINET
- EtherNet/IP
- Modbus TCP

Introduction

When you "Reset to factory settings", the interface module is reset to the delivery state settings. This means that all information that was saved internally on the interface module is deleted.

Result after resetting to factory settings

The following table shows an overview of the contents of the memory objects after resetting to factory settings.

Table 12-1 Result after resetting to factory settings

Memory object	Contents
IP address	Deleted (configurable when resetting: "Retain IP address"/ "Delete IP address")
Device name	Deleted
MAC address	Is not deleted
Identification data (I&M0)	Is not deleted
Maintenance data (I&M1, 2, 3, 4)	Are deleted (optional)
Firmware version	Is not deleted

NOTE

Failure of downstream stations is possible

Resetting an interface module to factory settings can lead to failure of downstream stations in a line.

NOTE

Substitute value behavior of I/O modules when resetting to factory settings

When "Resetting to factory settings", the I/O modules in the station take on the non-configured state, which means input data are not entered and output data are not output.

Reset options

There are two ways to reset an interface module to factory settings:

- Online with STEP 7 (TIA Portal)
- Online with STEP 7, V5.5 or higher
- Online via MFCT

Requirement

You need an online connection to reset an interface module to factory settings.

Procedure with STEP 7 (TIA Portal)

Connect the PG/PC to the PROFINET IO interface of the ET 200AL distributed I/O system.

Make sure that there is an online connection to the interface module which is to be reset to factory settings.

1. Open the online and diagnostics view of the interface module.
2. In the "Functions" folder, select the "Reset to factory settings" group.
3. Select the "Retain IP address" option button if you want to retain the IP address, or the "Reset IP address" option button if you want to delete the IP address.
4. Click the "Reset" button.
5. Click "OK" in response to the confirmation prompts.

Result: The interface module performs the "Reset to factory settings" while the RUN LED flashes yellow. When the RUN LED is lit yellow, the interface module has been reset to factory settings and is in the STOP operating mode. The event "Reset to factory settings" is entered in the diagnostics buffer.

Procedure with STEP 7 V5.5 or higher

Connect the PG/PC to the PROFINET IO interface of the ET 200AL distributed I/O system.

Make sure that there is an online connection to the interface module which is to be reset to factory settings.

1. Open the SIMATIC Manager.
2. Select accessible devices.
3. Select the interface module.
4. Navigate through "Menu > Options > Edit Ethernet devices > Reset to factor settings > Reset".

Result: The interface module performs the "Reset to factory settings" while the RUN LED flashes yellow. When the RUN LED is lit yellow, the interface module has been reset to factory settings and is in the STOP operating mode. The event "Reset to factory settings" is entered in the diagnostics buffer.

Procedure using MFCT

You can find information on the procedure via MFCT under "MultiFieldbus function manual (https://support.industry.siemens.com/cs/ww/en/view/109773209)" in the "Resetting the MF device" section.

Reference

You will find more information on the procedure in the STEP 7 online help.

12.4 Reactions to errors of the F module

Safe state (safety concept)

The basic principle behind the safety concept is the presence of a safe state for all process tags.

NOTE

For digital F-modules, the safe state is "0". The safe state applies to sensors and actuators.

Error reactions and startup of the F-system

In the following situations, the values of the safe state must be connected to the fail-safe channel/channels instead of the process values (passivation of the fail-safe module) due to the safety function:

- When the F-system is started
- When errors are detected in the safety-related communication between the F-CPU and the F-module via the PROFIsafe safety protocol (communication error)
- When errors of the F-I/O or channel errors (e.g. wire break or discrepancy error) are detected

Detected errors are written to the diagnostic buffer of the F-CPU and reported to the safety program in the F-CPU.

F-modules cannot save errors as retentive data. If the system is switched off and then restarted, any pending errors are detected again at startup. However, you can save errors in your safety program.

⚠ WARNING

If channels are set to "disabled", there are no diagnostic or error handling reactions.

For channels that are set to "disabled" in STEP 7, no diagnostic message or error handling is triggered when a channel error occurs. Not even if this channel is indirectly affected by a channel group error ("Channel activated/deactivated" parameter).

Troubleshooting in the F-system

To correct errors in your F-system, proceed as described in IEC 61508-1:2010 section 7.15.2.4 and IEC 61508-2:2010 section 7.6.2.1 e.

Perform the following steps:

1. Rung diagnostics and correct the error
2. Revalidate the safety function
3. Record in the service report

Fail-safe values for F-modules

For F-modules with inputs, the F-system provides fail-safe values (0) for the safety program when passivated. The fail-safe values are used instead of the process data at the F-DI.

For F-modules with outputs, the F-system transfers the fail-safe values (0) to the fail-safe outputs during passivation. The fail-safe values are used instead of the output values of the safety program. The fail-safe outputs are de-energized. this process is performed even if the F-CPU goes to the STOP operating state.

It is not possible to set the parameters of fail-safe values.

The fail-safe values are used in the following dependencies for the channel involved or all channels of the I/O module involved:

- F-system used
- Type of error occurred
  - Error in the F-I/O
  - Channel fault
  - Communication error

Re-integration of a fail-safe module or channel

The F-system changes from fail-safe values to process values automatically or after acknowledgment in the safety program by the user. A detailed list of errors can be found in the device manual of the F-module or in the STEP 7 online help.

Procedure after re-integration:

- For an F-module with inputs, the process data pending at the F-DI is provided again to the safety program.
- For an F-module with outputs, the output values provided by the safety program are transferred again to the F-DQs.

Additional information on passivation and re-integration

For additional information on passivation and reintegration of F-I/O modules, refer to the SIMATIC Safety – Configuring and Programming (https://support.industry.siemens.com/cs/ww/en/view/54110126) manual.

Reaction of the F-module with inputs to communication errors

F-modules with inputs react differently to communication errors than to other errors.

When a communication error is detected, the current process values at the inputs of the F-module remain set. No channels are passivated. The current process values are passivated in the F-CPU.

12.5 Cleaning modules

When wired, ET 200AL modules comply with degree of protection IP65/IP67 and do not require any cleaning. If you do have to clean the modules, then use a dry or damp cloth. Please take care to comply with degree of protection IP65/67 when cleaning with liquids.

13

Technical specifications

13.1 Marks and approvals

Marks and approvals on the nameplate

The following overview provides information about the possible marks and approvals. Only the marks and approvals specified on the nameplate apply to the module.

You can find the associated certificates for download on the Internet. See also: ET 200AL approvals (https://support.industry.siemens.com/cs/ww/en/ps/14245/cert)

CE marking

The ET 200AL distributed I/O system fulfills the requirements and protection targets of the following directives and complies with the harmonized European standards (ES) which have been promulgated for programmable logic controllers in the official gazettes of the European Community:

- 2014/30/EU "Electromagnetic Compatibility" (EMC Directive)
- 2011/65/EU "Restriction of the use of certain hazardous substances in electrical and electronic equipment" (RoHS Directive)

The fail-safe modules of the ET 200AL distributed I/O system meet the safety requirements and safety objectives of the following EU directives and comply with the harmonized EU standards (EN) for programmable controllers as specified in the official journals of the European Union.

- 2014/30/EU "Electromagnetic Compatibility" (EMC Directive)
- 2006/42/EC "Machinery Directive and Supplementary Directive 95/16/EC"
- 2011/65/EU "Restriction of the use of certain hazardous substances in electrical and electronic equipment" (RoHS Directive)

The EC Declarations of Conformity are available for the responsible authorities and are kept at the following address:

SIEMENS AG
Digital Industries
DI FA TI COS TT
P.O. Box 1963
D-92209 Amberg, Germany

UKCA mark

The ET 200AL distributed I/O system complies with the designated British standards (BS) for programmable logic controllers published in the official consolidated list of the British Government. The ET 200AL distributed I/O system meets the requirements and protection targets of the following regulations and related amendments:

- Electromagnetic Compatibility Regulations 2016 (EMC)
- Restriction of the Use of Certain Hazardous Substances in Electrical and Electronic Equipment Regulations 2012 (RoHS)
- Supply of Machinery (Safety) Regulations 2008 for ET 200AL safety components (fail-safe modules)

UK Declarations of Conformity for the respective authorities are available from:

Siemens AG
Digital Industries
Factory Automation
DI FA TI COS TT
Postfach 1963
D-92209 Amberg, Germany

UL approval

Underwriters Laboratories Inc. in accordance with

- UL 61010-1 and UL 61010-2-201
- CSA C22.2 No. 61010-1 and CSA C22.2 No. 61010-2-201 (Process Control Equipment)

The following table shows the modules that are approved for UL50/NEMA250 Enclosure Type 4x Indoor use only, watertight.

Table 13-1 Modules approved according to UL50/NEMA250 Enclosure Type 4x, Indoor use only, watertight

Description	Article number
Interface modules ET 200AL	
IM157-1 PN interface module	6ES7157-1AB00-0AB0
IM157-1 DP interface module	6ES7157-1AA00-0AB0
DI	
DI 8x24VDC, 8xM8	6ES7141-5BF00-0BA0
DI 8x24VDC, 4xM12	6ES7141-5AF00-0BA0
DI 16x24VDC, 8xM12	6ES7141-5AH00-0BA0
DQ	
DQ 8x24VDC/2A, 8xM12	6ES7142-5AF00-0BA0
DI/DQ	
DIQ 4+DQ 4x24VDC/0,5A, 8xM8	6ES7143-5BF00-0BA0
DIQ 4+DQ 4x24VDC/0,5A, 4xM12	6ES7143-5AF00-0BA0
DIQ 16x24VDC/0,5A, 8xM12	6ES7143-5AH00-0BA0
AI	
AI 4xU/I/RTD, 4xM12	6ES7144-5KD00-0BA0
AQ	

Description	Article number
AQ 4xU/I, 4xM12	6ES7145-5ND00-0BA0
Communications modules	
CM 4xIO-LINK, 4xM12	6ES7147-5JD00-0BA0

The following table shows the modules that are approved for UL50/NEMA250 Enclosure Type 1.

Table 13-2 Modules approved according to UL50/NEMA250 Enclosure Type 1

Description	Article number
DI/DQ	
F-DI 4+F-DQ 2x24VDC/2A, 4xM12	6ES7146-5FF00-0BA0
ET 200AL interface modules	
IM157-1 MF interface module	6ES7157-1MA00-0AB0
AI	
AI 4xRTD/TC, 4xM12	6ES7144-5KD50-0BA0

RCM Australia/New Zealand

The ET 200AL distributed I/O system meets the requirements of EN 61000-6-4:2007 Generic standards – Emission standard for industrial environments.

Korea Certificate

Note that this device conforms to Limit Class A for emission of radio interference. This device is not intended to be used in residential areas.
이기기는업무용(A급) 전자파적합기기로서판매자또는사용자는이점을주의하시기바라며
가정외의지역에서사용하는것을목적으로합니다.

EAC (Eurasian Conformity)

The code EAC (Eurasian Conformity) confirms the conformity with the guidelines (TR) of the Eurasian Economic Union.

WEEE mark (European Union)

Disposal information, observe the local regulations and section "Secure decommissioning (Page 32)".

13.2 Certificates

Shipbuilding certificates

The following shipbuilding certificates are intended for the device:

- ABS (American Bureau of Shipping)
- Bureau Veritas (French marine classification society)
- CCS (China Classification Society)
- Class NK (Nippon Kaiji Kyokai)
- DNV (Det Norske Veritas)
- KR (Korean Register of Shipping)
- LRS (Lloyds Register of Shipping)
- RINA (Registro Italiano Navale)

After a successful approval you can find the certificates with the certified article numbers in the Internet. See also: ET 200AL Marine/Shipbuilding (https://support.industry.siemens.com/cs/ww/en/ps/14245/cert?ct=446)

NOTE

The fail-safe module F DI 4+F DQ 2x24VDC/2A, 4xM12 of the ET 200AL distributed I/O system does not support the specified marine approvals due to the increased supply voltage requirements.

13.3 Standards and requirements

IEC 61131-2

The ET 200AL distributed I/O system fulfills the requirements and criteria of IEC 61131-2 (Programmable controllers, Part 2: Equipment requirements and tests) and the EMC requirements for use in Zone B.

IEC 61010-2-201

The ET 200AL distributed I/O system fulfills the requirements and criteria of standard IEC 61010-2-201.

PROFINET standard

The PROFINET interfaces of the ET 200AL distributed I/O system are based on the standard IEC 61158 Type 10.

PROFIBUS standard

The PROFIBUS interfaces of the ET 200AL distributed I/O system are based on IEC 61158 Type 3.

IO-Link standard

The IO-Link interfaces of the ET 200AL distributed I/O system are based on the standard IEC 61131-9.

Use in industrial environments

The ET 200AL distributed I/O devices are designed for the industrial field. It meets the following standards for this type of use:

- Requirements for interference emission EN IEC 61000-6-4: 2019
- Requirements for immunity EN IEC 61000-6-2: 2019

Use in residential areas

The ET 200AL distributed I/O system is not intended for use in residential areas. Using the ET 200AL distributed I/O system in residential areas can affect radio or television reception.

Use in mixed areas

Under certain circumstances, you can use the ET 200AL distributed I/O system in a mixed area. A mixed area is used for residential purposes and for commercial operations that do not significantly impact on residents.

If you want to use the ET 200AL distributed I/O system in mixed areas, you must ensure that its radio frequency interference emission complies with the limit classes of the EN 61000-6-3 generic standard. Suitable measures for observing these limits for use in a mixed area are, for example:

- Installation of the ET 200AL distributed I/O system in grounded control cabinets/control boxes
- Use of noise filters in the supply cables

An individual acceptance test is also required.

EtherNet/IP requirement

The EtherNet/IP interfaces of the ET 200AL distributed I/O system are based on the requirements of the CIP network library CIP Networks Library Volume 2 EtherNet/IP Adaptation of CIP.

Modbus TCP requirement

The Modbus TCP interfaces of the ET 200AL distributed I/O system are based on the requirements of the Modbus TCP application protocol specification V1.1b3.

Use in industrial burner and firing environments.

The fail-safe module F-DI 4+F-DQ 2x24VDC/2A, 4xM12 of the ET 200AL distributed I/O system meets the requirements and criteria of the following standards:

- EN 298 (Automatic burner control systems for burners and appliances burning gaseous or liquid fuels)
- EN 50156-1 (Electrical equipment for furnaces and ancillary equipment)
- EN 50156-2 (Electrical equipment for furnaces and ancillary equipment)

13.4 Electromagnetic compatibility

Definition

Electromagnetic compatibility is the ability of an electrical apparatus to function in a satisfactory manner in its electromagnetic environment without affecting this environment. An I/O device of the ET 200AL distributed I/O system fulfills the requirements of the EMC law of the European Union. The requirement for this is that an I/O device of the ET 200AL distributed I/O system meets the specifications and guidelines for electrical configuration.

Pulse-shaped disturbance variables

The table below shows the electromagnetic compatibility of the distributed I/O systems compared to pulse-shaped disturbance variables.

Table 13-3 Pulse-shaped disturbance variables

Pulse-shaped disturbance variable	Tested with	Conforms to degree of severity
Electrostatic discharge according to IEC 61000-4-2.[1]	Air discharge: ±8 kV	3
	Contact discharge: ±4 kV	2
Burst pulses (fast transient disturbance variables) according to IEC 61000-4-4.[1]	±2 kV (power supply cable)	3
	±2 kV (PROFIBUS/PROFINET/MultiFieldbus line)	4
	±1 kV (signal line <30 m)	3
	±1 kV (ET-Connection)	3
High-energy single pulse (surge) to IEC 61000-4-5 [2] Signal line < 30 m and only installation within buildings		
• Asymmetric coupling (phase-ground)[3]	±1 kV (24 V DC supply cable) without protective element	2
	±2 kV (PROFIBUS/PROFINET/MultiFieldbus line)	3
• Symmetric coupling (phase-phase)[3]	±0.5 kV (24 V DC supply cable) without protective element	2

[1] The maximum short-term influencing of analog devices during the duration of the EMC tests can amount to ±10 % of the full-scale value.
[2] Analog value deviation beyond the limits of the nominal range and diagnostics possible.
[3] If greater phase to ground or phase to phase values are required, you will need an additional external protective circuit (see function manual Designing interference-free controllers (https://support.industry.siemens.com/cs/ww/en/view/59193566)).

Sinusoidal disturbance variables

The following tables show the electromagnetic compatibility of the distributed I/O systems to sinusoidal disturbance variables.

Table 13-4 RF radiation

RF radiation according to IEC 61000-4-3 Electromagnetic RF field, amplitude modulated		Conforms to degree of severity
80 ... 1000 MHz	10 V/m	3
1.4 ... 6 GHz	3 V/m	2
80% AM (1 kHz)		

Table 13-5 RF coupling (signal and supply cables)

RF coupling according to IEC 61000-4-6.	Conforms to degree of severity
0.15 ... 80 MHz	3
10 V_{rms} unmodulated	
80% AM (1 kHz)	
150 Ω source impedance	

The maximum short-term influencing of analog modules during the duration of the EMC tests can amount to ±1% of the full-scale value.

Emission of radio frequency interference

The following table shows the interference emission of electromagnetic fields according to 55016: limit class A, group 1.

Table 13-6 Interference emission of electromagnetic fields

Frequency	Interference emission	Measuring distance
30 ... 230 MHz	<40 dB (µV/m) Q	10 m
230 ... 1000 MHz	<47 dB (µV/m) Q	10 m
1 ... 3 GHz	<76 dB (µV/m) P	3 m
3 ... 6 GHz	<80 dB (µV/m) P	3 m

24 V supply connection

The following table shows measuring ranges of the power supply according to EN 55016.

Table 13-7 Interference emission from the power supply

Frequency	Interference emission
0.15 ... 0.5 MHz	79 dB (µV) Q 66 dB (µV) M
0.5 ... 30 MHz	73 dB (µV) Q 60 dB (µV) M

13.5 Transport and storage conditions

Transport and storage conditions

The modules of the ET 200AL distributed I/O system exceed the specifications regarding transport and storage conditions pursuant to IEC 61131-2. The following table shows the conditions that apply to modules transported or stored in their original packaging.

Table 13-8 Transport and storage conditions

Type of condition	Permissible range
Free fall	≤0.3 m
Temperature	-40 °C to +70 °C
Temperature variation	20 K/h
Barometric pressure	from 1140 hPa to 660 hPa (corresponds to a height of-1000 to 3500 m)
Relative humidity	from 5 to 95%

13.6 Mechanical and climatic ambient conditions

Operating conditions

The ET 200AL distributed I/O system is suitable for use in weather-proof, fixed locations.

- The conditions of use exceed the requirements pursuant to IEC 61131-2
  - Class OTH2

You can find the values for the operating conditions in the technical specifications of the manuals or on the Internet (https://support.industry.siemens.com/cs/de/en/view/109742718).

Tests of mechanical ambient conditions

The following table shows the type and scope of the tests on mechanical ambient conditions.

Table 13-9 Tests of mechanical ambient conditions

Condition tested	Test standard	Values
Vibrations	Vibration test according to IEC 60068-2-6.	Type of oscillation: Frequency sweeps with a rate of change of 1 octave/minute. 5 Hz to 9.1 Hz, constant amplitude 15 mm 9.1 Hz to 150 Hz, constant acceleration 10g Duration of oscillation: 10 frequency sweeps per axis at each of three vertically aligned axes
Shock	Shock, tested according to IEC 60068-2-27	Type of shock: Half-sine Shock intensity: 30g peak value, 18 ms duration Direction of shock: 3 shocks each in ± direction in each of the 3 axes vertical to one another

Climatic ambient conditions

The following table shows the type and scope of the tests on climatic ambient conditions.

Table 13-10 Climatic ambient conditions

Ambient conditions	Fields of application	Comments
Temperature	-25 °C to 55 °C	All installation positions
Temperature variation	10 K/h	-
Relative humidity	From 5 to 100%	With condensation
Barometric pressure	From 1140 hPa to 795 hPa	Corresponds to a height of -1000 to 2000 m
Concentration of pollutants	ANSI/ISA-71.04 severity level G1; G2; G3	-

The following table shows the modules with functional versions which are permitted to -30 °C.

Table 13-11 Extended temperature range to -30 °C

Description	Article number	As of functional version
Interface modules ET 200AL		
IM 157-1 DP interface module	6ES7157-1AA00-0AB0	FS02
DI		
DI 8x24VDC, 8xM8	6ES7141-5BF00-0BA0	FS03
DI 8x24VDC, 4xM12	6ES7141-5AF00-0BA0	FS03
DI 16x24VDC, 8xM12	6ES7141-5AH00-0BA0	FS03
DQ		
DQ 8x24VDC/2A, 8xM12	6ES7142-5AF00-0BA0	FS03
DI/DQ		
DIQ 4+DQ 4x24VDC/0,5A, 8xM8	6ES7143-5BF00-0BA0	FS03
DIQ 4+DQ 4x24VDC/0,5A, 4xM12	6ES7143-5AF00-0BA0	FS03
DIQ 16x24VDC/0,5A, 8xM12	6ES7143-5AH00-0BA0	FS03
AI		
AI 4xU/I/RTD, 4xM12	6ES7144-5KD00-0BA0	FS04
AI 4xRTD/TC, 4xM12	6ES7144-5KD50-0BA0	FS01
AQ		
AQ 4xU/I, 4xM12	6ES7145-5ND00-0BA0	FS03
Fail-safe modules		
F-DI 4+F-DQ 2x24VDC/2A, 4xM12	6ES7146-5FF00-0BA0	FS01
Communication modules		
CM 4xIO-LINK, 4xM12	6ES7147-5JD00-0BA0	FS05

13.7 Details on insulation, protection class, degree of protection and rated voltage

Insulation

The insulation is designed in compliance with the requirements of IEC 61010-2-201.

NOTE

Galvanic isolation with 707 V DC (Type Test) is tested for modules with 24 V DC supply voltage (SELV/PELV).

Pollution class according to IEC 61010-2-201

- Protection class III

Severity for voltage interruption

The I/O devices of the distributed I/O system ET 200AL meet the severity class PS1 for voltage interruption (5 ms).

Pollution degree / overvoltage category pursuant to IEC 61010-2-201

Connected according to the specifications in the "Wiring (Page 75)" section:

- Pollution degree: 3
- Overvoltage category: II

In delivery state, with one or more open connections:

- Pollution degree: 2
- Overvoltage category: II

Degree of protection IP65 and IP67

Degree of protection IP65 and IP67 according to IEC 60529 for all modules of the ET 200AL distributed I/O system:

- 1. Code number: Dust-proof and complete protection from contact
- 2. Code number: Protection from water
  - IP65: Protection from water jets from any angle
    (The water may not have any damaging effect)
  - IP67: Protection against temporary submersion
    (The water must not enter the enclosure in harmful quantities)

Rated voltage for operation

The following table shows the nominal voltage and the corresponding tolerance with which the ET 200AL distributed I/O system operates.

Table 13-12 Rated voltage for operation

Rated voltage (SELV/PELV)	Tolerance range
24 V DC	20.4 V to 28.8 V DC

Safety-related shutdown of ET200AL standard modules

A

Introduction

The diagram below illustrates the fail-safe shutdown of ET 200AL standard modules.

In the configuration shown in the diagram below, all digital outputs that are operated with the 2L+ and 2M supply of the ET 200AL standard modules are switched to the safe OFF state. This step achieves the safety class SIL2/category 3/PLd.

Principle of operation

The higher-level safety relay (for example: 3SK1) disconnects the 2L+ and 2M supply. This switches all digital outputs operated with the 2L+ and 2M (switched) supply to the safe state. The digital outputs connected to the 1L+ and 1M (non-switched) supply are not intended for functional switching and therefore cannot be shut down safely.

There is no interaction between the outputs supplied by 1L+ and 2L+.

You can also integrate I/O modules that are operated solely at the supply 1L+ and 1M (non-switched) in the structure of your distributed I/O system. These I/O devices must be enabled as reaction-free modules. These I/O modules are not affected by a disconnection, they pass on the supply 2L+ and 2M (switched). The following figure shows this as an example using the DI, AI and AQ modules.

Block diagram

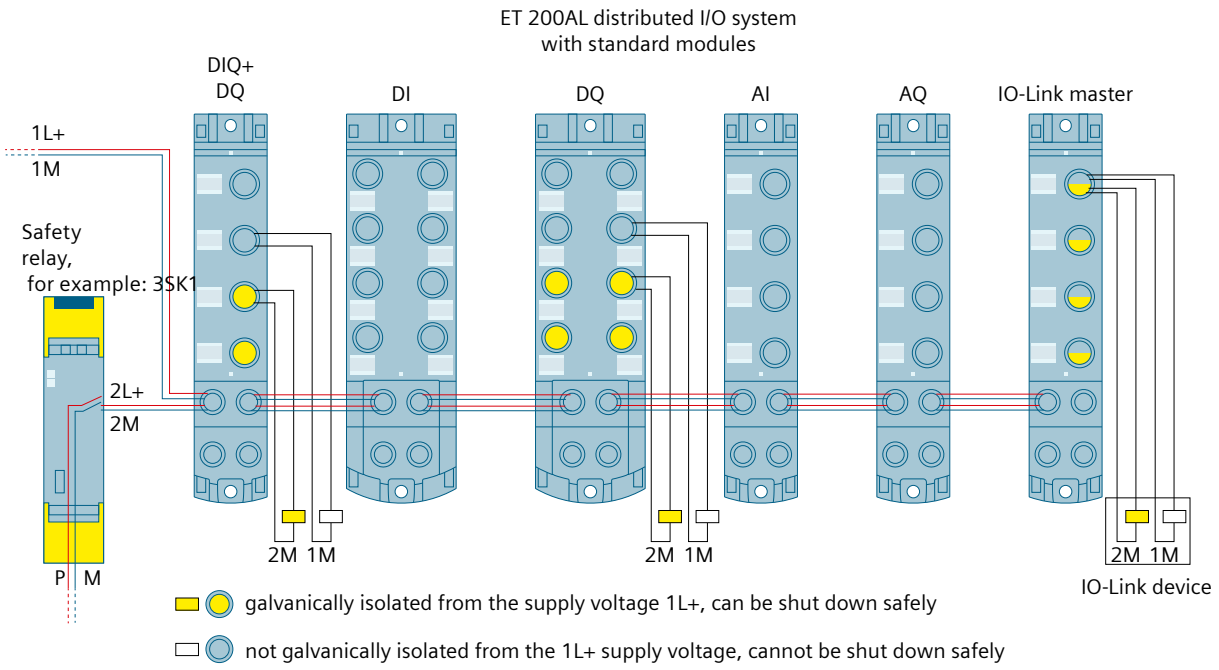

Figure A-1 Higher-level safety circuit with safety relay

WARNING

Note potential groups for safety-related shutdown

When a digital output is connected to a digital input, pay attention to the potential groups. Depending on the configuration, 1M and 2M can then be connected, which leads to elimination of the electrical isolation between 1L+ and 2L+.
The safety-related shutdown is not permitted if the electrical isolation is eliminated.

NOTE

Safe electrical separation

Maintain safe galvanic isolation for voltages higher than SELV/PELV.

NOTE

Safety-related shutdown for the IO-Link master

For an IO-Link master with IO-Link Port Class B, safety-related shutdown is available for the additional supply (PIN 2 and PIN 5).
The other signals at the port are reaction-free.

Please note that the IO-Link device must have corresponding safety characteristics in order to use safety-oriented tripping.

Limits of the higher-level safety circuit

The ET 200AL standard modules do not fulfill any safety functions. Safety functions are performed by the safety relay to bring the system into a safe state.
Adjust the operation inspection interval of the safety relay with relay output according to the safety class.
Take the following measures if energy that is not provided by the higher-level safety circuit is used to control the safety function.
Cover critical errors in the safety function that are not detected by the higher-level safety circuit (e.g. 3SK1) with suitable safety measures. The "diagnostics" must be performed indirectly via the controlled process.
Specifications for safety-relevant process data:

- Functionally safe
- Read via fail-safe inputs (e.g. F-DI)
- Fail-safe processing unit (e.g. F-CPU) for issuing commands
- Output through fail-safe outputs (e.g. F-DQ) to control the safety function

Requirements on the power supply

Operation requires a SELV/PELV power supply to limit overvoltages to L+ and M (24 V). This measure prevents possible errors from the power supply side at the same time.
Select the power supply according to the requirements of the respective operating instructions for the shutdown device and for the ET 200AL system.
You can find more information on safe SELV/PELV in the data sheets of the power supplies used.

FAQ

Read the latest information on safety-related shutdown in the FAQ (https://support.industry.siemens.com/cs/us/en/view/39198632).
In this FAQ, you can find the SIMATIC standard modules that are suitable for safety-related shutdown.

Request German Technical Inspectorate report (Report no. SN89858T)

You can request copies of the German Technical Inspectorate report at the following address:
SIEMENS AG
Digital Industries
DI FA TI COS TT
P.O. Box 1963
D-92209 Amberg, Germany

Dimension drawings

B

2 module widths are available with the distributed I/O system.
The figure below shows the height and width of the modules. The depth of the modules ranges from 40 mm to 46 mm. Detailed information on the dimensions of the individual modules can be found in the manuals for the Interface modules (https://support.industry.siemens.com/cs/ww/en/ps/14246/man) and I/O modules (https://support.industry.siemens.com/cs/ww/en/ps/14247/man) in the section "Dimension drawing".

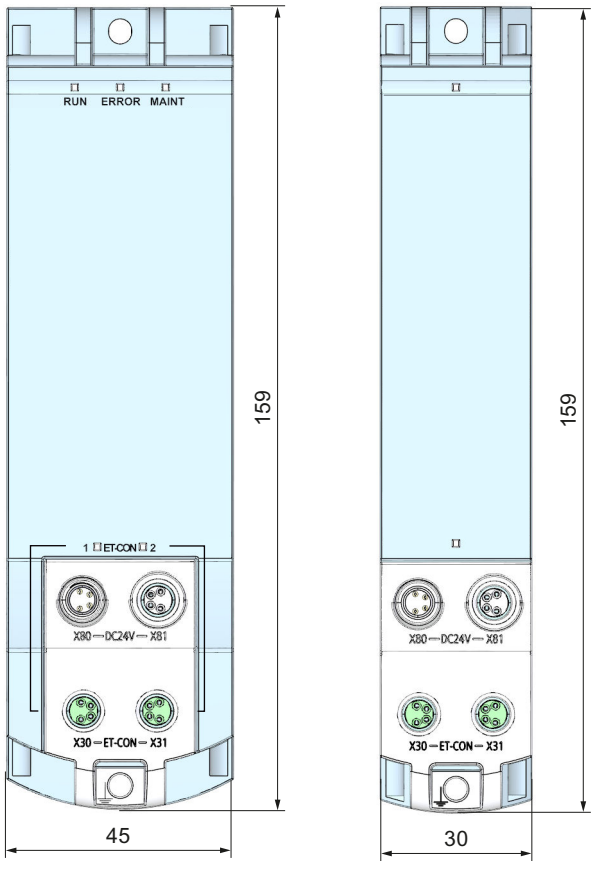

Figure B-1 Module dimension drawings (front view)

Accessories/spare parts

C

C.1 Accessories/spare parts

Accessories for the ET 200AL distributed I/O system

Table C-1 Accessories for ET-Connection

Designation	Length	Article number	
Cable		**Standard**	**PUR**
Bus cable for ET-Connection M8, pre-assembled on both sides with 2 x M8 connectors, 4-pin, shielded	0.19 m	6ES7194-2LH02-0AA0	6ES7194-2MH02-0AA0
	0.3 m	6ES7194-2LH03-0AA0	6ES7194-2MH03-0AA0
	1.0 m	6ES7194-2LH10-0AA0	6ES7194-2MH10-0AA0
	2.0 m	6ES7194-2LH20-0AA0	6ES7194-2MH20-0AA0
	5.0 m	6ES7194-2LH50-0AA0	6ES7194-2MH50-0AA0
	10.0 m	6ES7194-2LN10-0AA0	6ES7194-2MN10-0AA0
	15.0 m	6ES7194-2LN15-0AA0	6ES7194-2MN15-0AA0
Bus cable for ET-Connection M8, pre-assembled on both sides with 2 x M8 connectors, angled, 4-pin, shielded	0.3 m	6ES7194-2LH03-0AB0	6ES7194-2MH03-0AB0
	1.0 m	6ES7194-2LH10-0AB0	6ES7194-2MH10-0AB0
	2.0 m	6ES7194-2LH20-0AB0	6ES7194-2MH20-0AB0
	5.0 m	6ES7194-2LH50-0AB0	6ES7194-2MH50-0AB0
	10.0 m	6ES7194-2LN10-0AB0	6ES7194-2MN10-0AB0
	15.0 m	6ES7194-2LN15-0AB0	6ES7194-2MN15-0AB0
Bus cable for ET-Connection M8, pre-assembled on one side with 1 x M8 connector, 4-pin, shielded	2.0 m	6ES7194-2LH20-0AC0	6ES7194-2MH20-0AC0
	5.0 m	6ES7194-2LH50-0AC0	6ES7194-2MH50-0AC0
	10.0 m	6ES7194-2LN10-0AC0	6ES7194-2MN10-0AC0
	15.0 m	6ES7194-2LN15-0AC0	6ES7194-2MN15-0AC0
Connecting cable for bus cable ET-Connection M8, both ends assembled with 2x M8 socket, 4-pin, shielded	0.2 m	6ES7194-2LH02-0AD0	6ES7194-2MH02-0AD0
Connector			
M8 connector for ET-Connection, 4-pin, shielded		6ES7194-2AB00-0AA0	

Table C-2 Accessories for power supply

Designation	Length	Article number	
Cable		**Standard**	**PUR**
Power cable M8, pre-assembled on both sides with M8 connector and M8 socket, 4-pin	0.19 m	6ES7194-2LH02-1AA0	6ES7194-2MH02-1AA0
	0.3 m	6ES7194-2LH03-1AA0	6ES7194-2MH03-1AA0
	1.0 m	6ES7194-2LH10-1AA0	6ES7194-2MH10-1AA0
	2.0 m	6ES7194-2LH20-1AA0	6ES7194-2MH20-1AA0

Designation	Length	Article number	
Power cable M8, pre-assembled on both sides with M8 connector and M8 socket, 4-pin	5.0 m	6ES7194-2LH50-1AA0	6ES7194-2MH50-1AA0
	10.0 m	6ES7194-2LN10-1AA0	6ES7194-2MN10-1AA0
	15.0 m	6ES7194-2LN15-1AA0	6ES7194-2MN15-1AA0
Power cable M8, pre-assembled on both sides with angled M8 connector and angled M8 socket, 4-pin	0.3 m	6ES7194-2LH03-1AB0	6ES7194-2MH03-1AB0
	1.0 m	6ES7194-2LH10-1AB0	6ES7194-2MH10-1AB0
	2.0 m	6ES7194-2LH20-1AB0	6ES7194-2MH20-1AB0
	5.0 m	6ES7194-2LH50-1AB0	6ES7194-2MH50-1AB0
	10.0 m	6ES7194-2LN10-1AB0	6ES7194-2MN10-1AB0
	15.0 m	6ES7194-2LN15-1AB0	6ES7194-2MN15-1AB0
Power cable M8, pre-assembled on one side with M8 socket, 4-pin	2.0 m	6ES7194-2LH20-1AC0	6ES7194-2MH20-1AC0
	5.0 m	6ES7194-2LH50-1AC0	6ES7194-2MH50-1AC0
	10.0 m	6ES7194-2LN10-1AC0	6ES7194-2MN10-1AC0
	15.0 m	6ES7194-2LN15-1AC0	6ES7194-2MN15-1AC0
Connector			
M8 power connector, pin insert, 4-pin		6ES7194-2AA00-0AA0	
M8 power connector, socket insert, 4-pin		6ES7194-2AC00-0AA0	

Table C-3 M12 connector

Designation		Article number
Non-preassembled connectors for X1 DP1 (pin)		
PROFIBUS M12 plug connector 180° with female insert		6GK1905-0EB00
PROFIBUS M12 plug connector FastConnect 180° with female insert		6GK1905-0EB10
PROFIBUS M12 plug connector, angled with female insert		3RK1902-1DA00
Non-preassembled connectors for X1 DP2 (socket)		
PROFIBUS M12 plug connector 180° with pin insert		6GK1905-0EA00
PROFIBUS M12 plug connector FastConnect 180° with pin insert		6GK1905-0EA10
PROFIBUS M12 plug connector angled with pin insert		3RK1902-1BA00
Non-preassembled connectors for X1 P1R PN (LAN) and X1 P2R PN (LAN) socket		
PROFINET M12 plug connector d-coded with FastConnect connection technology, 180	1 unit/ pack	6GK1901-0DB10-6AA0
	8 units/ pack	6GK1901-0DB10-6AA8
PROFINET M12 plug connector, D-coded with fast connect technology 180°	1 unit/ pack	6GK1901-0DB20-6AA0
	8 units/ pack	6GK1901-0DB20-6AA8
PROFINET M12 plug connector, D-coded, angled		3RK1902-2DA00

Table C-4 Non-preassembled cable M12

Designation	Article number
Non-preassembled cable for X1 DP1 and X1 DP2	
PROFIBUS FC Cable	

Designation	Article number
FC Standard Cable	6XV1830-0EH10
FC Trailing Cable	6XV1830-3EH10
FC Food Cable (PE sheath)	6XV1830-0GH10
FC Robust Cable (PUR sheath)	6XV1830-0JH10
FC FRNC Cable (FRNC sheath)	6XV1830-0LH10
FC Underground Cable	6XV1830-3FH10
Festoon Cable GP (PVC sheath)	6XV1830-3GH10
FC Flexible Cable GP (PUR sheath)	6XV1831-2K
Non-preassembled connectors for X1 P1R PN (LAN) and X1 P2R PN (LAN)	
PROFIBUS FC Cable	
FC Standard Cable	6XV1840-2AH10
FC TP Trailing Cable	6XV1840-3AH10
FC TP Trailing Cable GP	6XV1870-2D
FC TP Marine Cable	6XV1840-4AH10
FC TP Torsion Cable	6XV1870-2F
FC TP Flexible Cable GP (PVC sheath)	6XV1870-2B
FC TP FRNC Cable (FRNC sheath)	6XV1871-2F
FC TP Food Cable (PE sheath)	6XV1871-2L
FC TP Festoon Cable GP (PVC sheath)	6XV1871-2S

Table C-5 Pre-assembled cable M12

Designation		Article number
Pre-assembled cable for X1 DP1 and X1 DP2		
PROFIBUS M12 connecting cable, trailing cable, pre-assembled on both sides with PROFIBUS M12 connectors, 180° (one end with socket, one end with pin)	0.3 m	6XV1830-3DE30
	0.5 m	6XV1830-3DE50
	1.0 m	6XV1830-3DH10
	1.5 m	6XV1830-3DH15
	2.0 m	6XV1830-3DH20
	3.0 m	6XV1830-3DH30
	5.0 m	6XV1830-3DH50
	10.0 m	6XV1830-3DN10
	15.0 m	6XV1830-3DN15
PROFIBUS M12 connecting cable, trailing cable, pre-assembled on both sides with PROFIBUS M12 connectors, angled (one end with socket, one end with pin)	1.5 m	6XV1830-3DH15-0SB0
	2.0 m	6XV1830-3DH20-0SB0
	3.0 m	3RK1902-1NB30
	5.0 m	3RK1902-1NB50
	10.0 m	3RK1902-1NC10
	15.0 m	6XV1830-3DN15-0SB0
Pre-assembled cable for X1 P1R PN (LAN) and X1 P2R PN (LAN)		
PROFINET M12 connecting cable, trailing cable, pre-	0.3 m	6XV1870-8AE30

Designation		Article number
assembled on both ends with M12 connectors 180° (pin)	0.5 m	6XV1870-8AE50
	1.0 m	6XV1870-8AH10
	1.5 m	6XV1870-8AH15
	2.0 m	6XV1870-8AH20
	3.0 m	6XV1870-8AH30
	5.0 m	6XV1870-8AH50
	10.0 m	6XV1870-8AN10
	15.0 m	6XV1870-8AN15
PROFINET M12 connecting cable, trailing cable, pre-assembled on both ends with M12 connectors, angled (pin)	0.3 m	6XV1870-8AE30-0SB0
	0.5 m	6XV1870-8AE50-0SB0
	1.0 m	6XV1870-8AH10-0SB0
	1.5 m	6XV1870-8AH15-0SB0
	2.0 m	6XV1870-8AH20-0SB0
	3.0 m	3RK1902-2NB30
	5.0 m	3RK1902-2NB50
	10.0 m	3RK1902-2NC10
	15.0 m	6XV1870-8AN15-0SB0
PROFINET M12 connecting cable, trailing cable, pre-assembled on both sides with PROFIBUS M12 connectors, angled (one end with pin, one end open)	3.0 m	3RK1902-2HB30
	5.0 m	3RK1902-2HB50
	10.0 m	3RK1902-2HC10
PROFINET M12 connecting cable, trailing cable, pre-assembled on one end with M12 connectors 180° (pin), other end with RJ45 plug 145°	2.0 m	6XV1871-5TH20
	3.0 m	6XV1871-5TH30
	5.0 m	6XV1871-5TH50
	10.0 m	6XV1871-5TN10
	15.0 m	6XV1871-5TN15

Table C-6 Y cable

Description		Article number
SIMATIC DP, Y-cable for distributed I/Os for double connection of I/Os using single cable, 5-pin, M12	0.2 m	6ES7194-6KA00-0XA0
SIMATIC DP, Y-cable, for fail-safe ET 200 distributed I/O, IP 65/67, for connection of single-channel sensors (1oo1 evaluation) 5-pin M12	0.2 m	6ES7194-6KB00-0XA0
SIMATIC DP, Y-cable, for fail-safe distributed I/O ET 200, IP 65/67, for common connection of an F-DQ and F-DI channel by means of 8-pin M12 socket	0.2 m	6ES7194-6KC00-0XA0

Table C-7 Additional accessories

Designation	Article number
Identification labels 10 x 5 mm RAL9016, composed of 200 labels on frames, per frame 40 labels	6ES7194-2BA00-0AA0
Identification labels 10 x 5 mm RAL1018, yellow, consisting of 200 labels on frames, 40 labels per frame	6ES7194-2BB00-0AA0

Designation	Article number
Identification labels 10 x 7 mm, yellow, consisting of 816 labels on frames, 48 labels per frame (for eCoding plug connectors)	6ES7194-6HA00-0AA0
Sealing cap M8 for modules IP67	3RK1901-1PN00
Sealing cap M12 for modules IP67	3RX9802-0AA00
Bus connection plug PROFIBUS M12, pin insert, 5 units	6GK1905-0EC00
Stripping Tool for ET-Connection	6ES7194-2KA00-0AA0
Stripping Tool for PROFINET	6GK1901-1GA00
Stripping Tool for PROFIBUS	6GK1905-6AA00
eCoding plug connector, stores the F-destination addresses and F-source addresses for F-modules	6ES7194-6KB01-0AA0

Online catalog

Other article numbers for the ET 200AL distributed I/O system can be found on the Internet (https://mall.industry.siemens.com) in the online catalog and the online order system.

C.2 Cables

Cables for ET-Connection standard and PUR cable

The cables for ET-Connection are available in the following versions and lengths:

- Bus cable (4-wire), pre-assembled on both sides with 2 M8 connectors, 4-pole, shielded
  - available lengths: 0.19 m, 0.3 m, 1 m, 2 m, 5 m, 10 m, 15 m
- Bus cable (4-wire), pre-assembled on both sides with 2 M8 connectors, angled, 4-pole, shielded
  - available lengths: 0.3 m, 1 m, 2 m, 5 m, 10 m, 15 m
- Bus cable (4-wire), pre-assembled on one side 1x M8 connector, 4-pole, shielded
  - available lengths: 2 m, 5 m, 10 m, 15 m

The following table shows the technical properties of the bus cable ET-Connection standard.

Table C-8 Cables for ET-Connection

General information	
Product type designation	BUS CABLE ET-CONNECTION
Function	To connect ET-CONNECTION devices with degree of protection IP65/IP67
Degree of protection and protection class	
IP65	Yes
IP67	Yes
Ambient conditions	
Ambient temperature during mounting	

* = Applies to cable lengths up to 10 meters.

General information	
minimum	-30 °C
maximum	80 °C
Storage/transport temperature	
Ambient temperature during transport and storage	
minimum	-40 °C
maximum	80 °C
Cables	
Cable designation	2Y(ST)CY 1x4x0.5/1.0-100-GN
Number of electrical wires	4
Design of shielding	Overlapped aluminum-lined sheet, coated with shielding made of tin plated copper wires
Outside diameter of the inner conductor	0.5 mm
Outside diameter of the wire insulation	1.0 mm
Outside diameter of the cable sheath	5 mm
Number of bending cycles	1000000; Trailing-chain suitable for 1 million bending cycles with a bending radius of 100 mm, a velocity of 4 m/s and an acceleration of 4 m/s^2
Permissible bending radius	
One time bending, min.	20 mm
Multiple bending, min.	40 mm
Constant bending	100 mm
Color of the cable sheath	Green
Color of the wire insulation of the data wires	White, yellow, blue, orange
Weight per length	34 kg/km
Mechanics/material	
Type of cable outlet	180° cable outlet 90° cable outlet (with angled connectors)
Number of connectors	1 or 2
Connector housing material	Metal
Wire insulation material	PE
Cable sheath material	PVC
Material property halogen free	No
Material property silicon free	Yes

* = Applies to cable lengths up to 10 meters.

The following table shows the technical properties of the bus cable ET-Connection, PUR cable.

Table C-9 Cables for ET-Connection, PUR cable

General information	
Product type designation	BUS CABLE ET-CONNECTION, PUR CABLE
Function	To connect ET-CONNECTION devices with degree of protection IP65/IP67
Degree of protection and protection class	
IP65	Yes
IP67	Yes
Ambient conditions	
Ambient temperature during mounting	
minimum	-30 °C
maximum	80 °C
Storage/transport temperature	
Ambient temperature during transport and storage	
minimum	-40 °C
maximum	80 °C
Cables	
Cable designation	2Y(ST)C11Y 2x2x0.5/1.0-100-GN
Number of electrical wires	4
Design of shielding	Overlapped aluminum-lined sheet, coated with shielding made of tin plated copper wires
Outside diameter of the inner conductor	0.5 mm
Outside diameter of the wire insulation	1.0 mm
Outside diameter of the cable sheath	5 mm
Number of bending cycles	1000000*; trailing-chain suitable for 1 million bending cycles with a bending radius of 100 mm, a velocity of 4 m/s and an acceleration of 4 m/s²
Permissible bending radius	
One time bending, min.	20 mm
Multiple bending, min.	40 mm
Constant bending	100 mm
Color of the cable sheath	Green
Color of the wire insulation of the data wires	White, yellow, blue, orange
Weight per length	34 kg/km
Mechanics/material	
Type of cable outlet	180° cable outlet 90° cable outlet (with angled connectors)
Number of connectors	1 or 2
Connector housing material	Metal

* = Applies to cable lengths up to 10 meters.

General information	
Wire insulation material	PE
Cable sheath material	PUR
Material property halogen free	Yes
Material property silicon free	Yes

* = Applies to cable lengths up to 10 meters.

Connecting cable for ET-Connection standard and PUR cable

You can use the connecting cable between two cables for ET-Connection.
Typical applications for using connecting cable for ET-Connection are:

- Combination of individual cable lengths by joining multiple pre-assembled cables for ET-Connection.
- Selective installation of disconnection points of cables for ET-Connection (for simple changing of cables and cable sections, e.g. with trailing-cable applications).

You can use a maximum of two connecting cables between the two modules.
The length of the cables for ET-Connection is limited to maximum 10 m when connecting cables are used.
The connecting cable for ET-Connection is available in the following design:

- Connecting cable for bus cable ET-Connection M8, both ends assembled with 2x M8 socket, 4-pole, shielded, length 0.2 m

The following table shows the technical properties of the connecting cable for ET-Connection standard.

Table C-10 Connecting cables for ET-Connection

General information	
Product type designation	CONNECTING CABLE FOR BUS CABLE ET-CONNECTION, CABLE 0.2 M
Function	To connect two bus cables ET-CONNECTION
Degree of protection and protection class	
IP65	Yes
IP67	Yes
Ambient conditions	
Ambient temperature during mounting	
minimum	-30 °C
maximum	80 °C
Storage/transport temperature	
Ambient temperature during transport and storage	
minimum	-40 °C
maximum	80 °C
Cables	
Cable designation	2Y(ST)CY 1x4x0.5/1.0-100-GN
Number of electrical wires	4

General information	
Design of shielding	Overlapped aluminum-lined sheet, coated with shielding made of tin plated copper wires
Cable length	0.2 m
Outside diameter of the inner conductor	0.5 mm
Outside diameter of the wire insulation	1.0 mm
Outside diameter of the cable sheath	5 mm
Permissible bending radius	
One time bending, min.	20 mm
Multiple bending, min.	40 mm
Constant bending	100 mm
Color of the cable sheath	Green
Color of the wire insulation of the data wires	White, yellow, blue, orange
Weight per length	34 kg/km
Mechanics/material	
Type of cable outlet	180° cable outlet
Connector housing material	Metal
Wire insulation material	PE
Cable sheath material	PVC
Material property halogen free	No
Material property silicon free	Yes

The following table shows the technical properties of the connecting cable for ET-Connection, PUR cable.

Table C-11 Connecting cables for ET-Connection, PUR cable

General information	
Product type designation	CONNECTING CABLE FOR BUS CABLE ET-CONNECTION, PUR CABLE 0.2 M
Function	To connect two bus cables ET-CONNECTION
Degree of protection and protection class	
IP65	Yes
IP67	Yes
Ambient conditions	
Ambient temperature during mounting	
minimum	-30 °C
maximum	80 °C
Storage/transport temperature	
Ambient temperature during transport and storage	
minimum	-40 °C
maximum	80 °C
Cables	

General information	
Cable designation	2Y(ST)C11Y 2x2x0.5/1.0-100-GN
Number of electrical wires	4
Design of shielding	Overlapped aluminum-lined sheet, coated with shielding made of tin plated copper wires
Cable length	0.2 m
Outside diameter of the inner conductor	0.5 mm
Outside diameter of the wire insulation	1.0 mm
Outside diameter of the cable sheath	5 mm
Permissible bending radius	
One time bending, min.	20 mm
Multiple bending, min.	40 mm
Constant bending	100 mm
Color of the cable sheath	Green
Color of the wire insulation of the data wires	White, yellow, blue, orange
Weight per length	34 kg/km
Mechanics/material	
Type of cable outlet	180° cable outlet
Connector housing material	Metal
Wire insulation material	PE
Cable sheath material	PUR
Material property halogen free	Yes
Material property silicon free	Yes

Cables of power supply standard and PUR cable

The cables for the power supply are available in the following versions and lengths:

- Power cable (4-wire), pre-assembled on both sides with a 4-pole M8 pin connector/socket connector
  - available lengths: 0.19 m, 0.3 m, 1 m, 2 m, 5 m, 10 m, 15 m
- Power cable (4-wire), pre-assembled on both sides with a 4-pole M8 pin connector/socket connector, angled
  - available lengths: 0.3 m, 1 m, 2 m, 5 m, 10 m, 15 m
- Power cable (4-wire), pre-assembled on one side with 1x M8 socket connector
  - available lengths: 2 m, 5 m, 10 m, 15 m

The following table shows the technical properties of the power supply cable, standard.

Table C-12 Cables for power supply

General information	
Product type designation	POWER CABLE M8
Function	For connection of ET 200AL for 24 V DC power supply

General information	
Degree of protection and protection class	
IP65	Yes
IP67	Yes
Ambient conditions	
Ambient temperature during mounting	
minimum	-30 °C
maximum	80 °C
Storage/transport temperature	
Ambient temperature during transport and storage	
minimum	-40 °C
maximum	80 °C
Cables	
Cable designation	4 Li9Y 0.50 mm² Y
Number of electrical wires	4
Outside diameter of the inner conductor	0.8 mm
Outside diameter of the wire insulation	1.46 mm
Outside diameter of the cable sheath	5.2 mm
Number of bending cycles	2500000; Trailing-chain suitable for 2.5 million bending cycles with a bending radius of 52 mm, a speed of 3 m/s² and an acceleration of 10 m/s²
Permissible bending radius	
One time bending, min.	26 mm
Multiple bending, min.	52 mm
Constant bending	52 mm
Color of the cable sheath	Gray
Color of the wire insulation of the power wires	White, brown, blue black
Weight per length	44 kg/km
Mechanics/material	
Type of cable outlet	180° cable outlet 90° cable outlet (with angled connectors)
Number of connectors	1 or 2
Connector housing material	Plastic
Wire insulation material	PP
Cable sheath material	PVC
Material property halogen free	No
Material property silicon free	Yes

The following table shows the technical properties of the power supply, PUR cable

Table C-13 Cables for power supply, PUR cable

General information	
Product type designation	POWER CABLE M8, PUR CABLE
Function	For connection of ET 200AL for 24 V DC power supply
Degree of protection and protection class	
IP65	Yes
IP67	Yes
Ambient conditions	
Ambient temperature during mounting	
minimum	-30 °C
maximum	80 °C
Storage/transport temperature	
Ambient temperature during transport and storage	
minimum	-40 °C
maximum	80 °C
Cables	
Cable designation	LIF9Y11YFHF 4x0.50 mm²
Number of electrical wires	4
Outside diameter of the inner conductor	1 mm
Outside diameter of the wire insulation	1.46 mm
Outside diameter of the cable sheath	5.1 mm
Number of bending cycles	2000000; trailing-chain suitable for 2 million bending cycles with a bending radius of 51 mm, a velocity of 5 m/s and an acceleration of 5 m/s²
Permissible bending radius	
One time bending, min.	26 mm
Multiple bending, min.	51 mm
Constant bending	51 mm
Color of the cable sheath	Gray
Color of the wire insulation of the power wires	White, brown, blue black
Weight per length	44 kg/km
Mechanics/material	
Type of cable outlet	180° cable outlet 90° cable outlet (with angled connectors)
Number of connectors	1 or 2
Connector housing material	Plastic
Wire insulation material	PP

General information	
Cable sheath material	PE-PUR
Material property halogen free	Yes
Material property silicon free	Yes

C.3 Connectors

The following table shows the technical specifications of the user-configurable connectors.

The following table shows the technical specifications of the connection plug for the ET-CONNECTION connection.

Article number	6ES7194-2AB00-0AA0
General information	
Product type designation	Connection plug
Product description	M8 plug connector with high degree of protection, 4-pin, metal version
Suitability for use	for connecting ET-CONNECTION nodes (e.g. SIMATIC ET 200AL) in degree of protection IP65 / 67
Degree and class of protection	
IP degree of protection	IP65/67
Ambient conditions	
Ambient temperature during assembly, min.	-30 °C
Ambient temperature during assembly, max.	80 °C
Ambient temperature during storage/transportation	
• min.	-40 °C
• max.	80 °C
Mechanics/material	
Outgoing feeder type	180° cable outlet
Material of housing	metal
Dimensions	
Width	14 mm
Depth	47 mm

The following table shows the technical specifications of the power connector with female contact insert for the 24 V DC power supply.

Article number	6ES7194-2AC00-0AA0
General information	
Product type designation	Power connector
Product description	M8 plug connector with high degree of protection, socket insert, 4-pin, plastic version
Suitability for use	For connection to ET 200AL for 24 V DC power supply
Degree and class of protection	
IP degree of protection	IP65/67
Ambient conditions	
Ambient temperature during assembly, min.	-30 °C
Ambient temperature during assembly, max.	85 °C

Article number	6ES7194-2AC00-0AA0
Ambient temperature during storage/transportation	
• min.	-40 °C
• max.	85 °C
connection method / header	
Connector type	M8, 4-pole
Type of electrical connection for mains supply line	Screw terminals
• connectable cable cross-section for mains supply line, min.	0.14 mm²
• connectable cable cross-section for mains supply line, max.	0.5 mm²
• Connectable conductor cross-section for AWG cables, min.	26
• Connectable conductor cross-section for AWG cables, max.	20
Suitable for cable diameter, min.	4 mm
usable for cable diameter, max.	5.5 mm
Mechanics/material	
Outgoing feeder type	180° cable outlet
Material of housing	plastic
Dimensions	
Width	14 mm
Depth	47 mm

The following table shows the technical specifications of the power connector with male contact insert for the 24 V DC power supply.

Article number	6ES7194-2AA00-0AA0
General information	
Product type designation	Power connector
Product description	M8 plug connector with high degree of protection, 4-pin, plastic version
Suitability for use	For connection to ET 200AL for 24 V DC power supply
Degree and class of protection	
IP degree of protection	IP65/67
Ambient conditions	
Ambient temperature during assembly, min.	-30 °C
Ambient temperature during assembly, max.	85 °C
Ambient temperature during storage/transportation	
• min.	-40 °C
• max.	85 °C

Article number	6ES7194-2AA00-0AA0
connection method / header	
Connector type	M8, 4-pole
Type of electrical connection for mains supply line	Screw terminals
• connectable cable cross-section for mains supply line, min.	0.14 mm²
• connectable cable cross-section for mains supply line, max.	0.5 mm²
• Connectable conductor cross-section for AWG cables, min.	26
• Connectable conductor cross-section for AWG cables, max.	20
Suitable for cable diameter, min.	4 mm
usable for cable diameter, max.	5.5 mm
Mechanics/material	
Outgoing feeder type	180° cable outlet
Material of housing	plastic
Dimensions	
Width	14 mm
Depth	47 mm

C.4 Pin assignment and core color

Pin assignment of the sockets for ET-Connection

The tables below shows the pin assignments of the 2 sockets for the connection of ET-Connection.

Table C-14 Pin assignment for ET-Connection (interface modules)

Pin	Assignment		Assignment of the core color of the bus cable for ET-Connection	Front view of the sockets	
	X30 socket (ET-Connection1)	X31 socket (ET-Connection2)		X30	X31
1	RXP	RXP	yellow	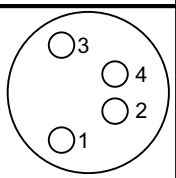	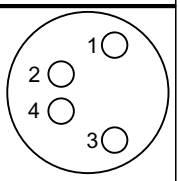
2	TXP	TXP	white		
3	TXN	TXN	blue		
4	RXN	RXN	orange		
Shield-ing	Functional earth FE		-		

Table C-15 Pin assignment for ET-Connection (I/O modules)

Pin	Assignment		Assignment of the core color of the bus cable for ET-Connection	Front view of the sockets	
	X30 socket (ET-Connection IN)	X31 socket (ET-Connection OUT)		X30	X31
1	TXP	RXP	yellow	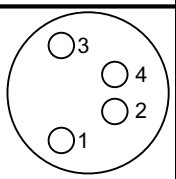	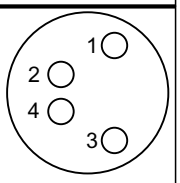
2	RXP	TXP	white		
3	RXN	TXN	blue		
4	TXN	RXN	orange		
Shield-ing	Functional earth FE		-		

Pin assignment of the connector for infeed of the supply voltage

The table below shows the pin assignment for infeed of the supply voltage.

Table C-16 Pin assignment of the supply voltage connector

Pin	Assignment	Assignment of the core color of the power cable	Front view of the connector
	X80 connector (power input)		
1	Supply voltage 1L+ (non-switched)	brown	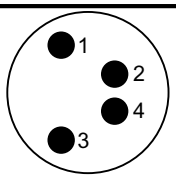
2	Ground 2M (switched)	white	
3	Ground 1M (non-switched)	blue	
4	Load voltage 2L+ (switched)	black	

Pin assignment of the socket for loop-through of the supply voltage

The table below shows the pin assignment for loop-through of the supply voltage.

Table C-17 Pin assignment of the supply voltage socket

Pin	Assignment	Assignment of the core color of the power cable	Front view of the socket
	X81 Socket (power output)		
1	Supply voltage 1L+ (non-switched)	brown	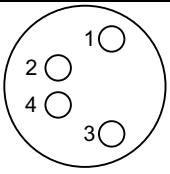
2	Ground 2M (switched)	white	
3	Ground 1M (non-switched)	blue	
4	Load voltage 2L+ (switched)	black	

Glossary

1oo1 evaluation

Type of → sensor evaluation – in the case of the 1oo1 evaluation, there → is one sensor with a 1-channel connection to the F module.

1oo2 evaluation

Type of → sensor evaluation – in the case of 1oo2 evaluation , two input channels are assigned one two-channel sensor or two one-channel sensors. The input signals are compared internally for equivalence or nonequivalence.

Access protection

Fail-safe systems must be protected against dangerous, unauthorized access. Access protection for F-systems is achieved by assigning two passwords (for the fail-safe CPU and the safety program).

Acknowledgment time

During the acknowledgment time, the → F-I/O acknowledge the sign of life specified by the → F-CPU. The acknowledgment time is included in the calculation of the → monitoring time and → response time of the overall fail-safe system.

Actuator

Actuators are, for example, power relays or contactors for switching on load devices or load devices themselves (e.g. directly controlled solenoid valves).

Availability

Availability is the probability that a system is functional at a specific point in time. Availability can be increased by redundancy, e.g., by using multiple -> sensors at the same measuring point.

Bus

A common transfer route to which all devices are connected; it has two defined ends.

Channel

In IEC 61508 terminology, a channel is a single signal/logic path that supports a safety function. The term 'channel' is used in this sense in the definition of 1oo1 and 1oo2 above. In most cases in this manual, the term 'channel' refers to exactly one process value, which may be implemented as 1oo1 or 1oo2.

Channel fault

Channel-specific fault, such as a wire break or short circuit.

In channel-specific passivation, the affected channel is either automatically reintegrated or the fail-safe module must be removed and reinserted after the fault has been eliminated.

Channel group

The channels of a module are grouped together in a channel group. Certain parameters in STEP 7 can only be assigned to channel groups, rather than to individual channels.

Channel number

Channel numbers are used to uniquely identify the inputs and outputs of a module and to assign channel-specific diagnostic messages.

Channel-specific passivation

With this type of passivation, only the affected channel is passivated in the event of a → channel fault. In the event of a → module fault, all channels of the → fail-safe module are passivated.

Configuration

Systematic arrangement of individual modules (design).

Connection plug

Physical connection between device and cable.

CRC

Cyclic Redundancy Check

CRC signature

The validity of the process values in the safety frame, the accuracy of the assigned address references, and the safety-related parameters are validated by means of the CRC signature in the safety frame.

Dark period

Dark periods occur during shutdown tests and complete bit pattern tests. The fail-safe output module switches test-related zero signals to the active output. This output is then briefly disabled (= dark period). An adequate carrier → actuator will not respond to this and will remain activated.

Device

Device that can send, receive or amplify data via the bus, e.g. IO device via PROFINET IO.

Device names

Before a module can be addressed by a controller, it must have a device name. In its delivery state, a module has no device name. A module can only be addressed by the controller after it has been assigned a device name via the PG/PC or via the topology, e.g. for the transfer of

configuration data (such as IP address) during startup or for the exchange of user data during cyclic operation.

Device names are used in these fieldbuses, for example:

- PROFINET
- EtherNet/IP
- Modbus TCP

Diagnostics

Monitoring functions for the detection, localization, classification, display, and further evaluation of errors, faults, and alarms. They run automatically while the system is in operation. This increases the availability of systems by reducing commissioning times and downtimes.

Discrepancy analysis

The discrepancy analysis for equivalence/non-equivalence is used for fail-safe applications to prevent errors from time differences between two signals for the same function. The discrepancy analysis is initiated when different levels are detected in two associated input signals (when testing for non-equivalence: the same levels). A check is performed to determine whether the difference (for nonequivalence testing: the same levels) has disappeared after an assignable time period, the so-called discrepancy time. If not, this means that a discrepancy error exists.

The discrepancy analysis compares the two input signals of the 1oo2 sensor evaluation in the fail-safe input module.

Discrepancy time

Configurable time for the → discrepancy analysis. If the discrepancy time is set too high, the fault detection time and → fault reaction time are extended unnecessarily. If the discrepancy time is set too low, availability is decreased unnecessarily since a discrepancy error is detected when, in reality, no error exists.

Distributed I/O system

System with input and output modules that are configured on a distributed basis, far away from the CPU controlling them.

eCoding plug connector

The eCoding plug connector stores the external addresses of F-source and F-destination of the I/O module. The eCoding plug connector simplifies module replacement.

ET-Connection

Backplane bus through which a connection is made. This allows bus participants to be installed several meters from each other.

EtherNet/IP

EtherNet/IP is a communication protocol based on TCP/IP and UDP/IP. EtherNet/IP thus extends the use of all Ethernet components and the well-known network and transport protocols in the industrial environment.

Fail-safe

Ability of a technical system to remain in a safe state or immediately switch to another safe state when certain failures occur.

Fail-safe modules

ET 200AL modules with integrated safety functions that can be used for safety-related operation (safety mode).

Fail-safe systems

Fail-safe systems (F-systems) remain in a safe state or immediately assume another safe state as soon as particular failures occur.

Fault reaction time

The maximum fault reaction time of an F-system defines the interval between the occurrence of any fault and a safe reaction at all affected fail-safe outputs.

For → F-system overall: The maximum fault reaction time defines the interval between the occurrence of any fault in any → F-I/O and a safe response at the relevant fail-safe output.

For digital inputs: The maximum fault reaction time defines the interval between the occurrence of the fault and the safe reaction on the backplane bus.

For digital outputs: The maximum fault reaction time defines the interval between the occurrence of the fault and the safe reaction at the digital output.

Fault tolerance time

The fault tolerance time of a process is the time a process can be left unattended without risk to life and limb of the operating personnel, or damage to the environment.

Any type of F-system control is tolerated within this fault tolerance time, i.e. the → F-system can control its processes incorrectly or even not at all. The fault tolerance time depends on the type of process and must be determined on a case-by-case basis.

F-CPU

An F-CPU is a central processing unit with fail-safe capability that is permitted for use in SIMATIC Safety. A standard user program can also be run on the F-CPU.

F-I/O

Collective name for fail-safe inputs and outputs available in SIMATIC S7 for integration into the SIMATIC Safety F-system. Available F-I/O modules:

- Fail-safe I/O module for ET 200eco
- Fail-safe signal modules S7-300 (F-SMs)
- Fail-safe modules for ET 200S
- Fail-safe modules for ET 200SP
- Fail-safe modules for ET 200MP
- Fail-safe modules for ET 200AL
- Fail-safe DP standard slaves
- Fail-safe PA field devices
- Fail-safe IO devices

Firmware update

Upgrade of firmware for modules (interface modules, I/O modules etc.), e.g. after functional enhancements, to the newest firmware version (update).

F-monitoring time

→ PROFIsafe monitoring time

F-Systems

→ fail-safe systems

Ground

Conductive earth whose electrical potential can be set equal to zero at any point.
All interconnected, inactive parts of a piece of equipment that cannot accept any dangerous contact voltage, even in the event of a fault.

Ground

Conductive earth whose electrical potential can be set equal to zero at any point.
All interconnected, inactive parts of a piece of equipment that cannot accept any dangerous contact voltage, even in the event of a fault.

GSD file

As a generic station description, this file in XML format has all the properties of a PROFINET or PROFIBUS device that are required for its configuration.

I/O modules

All modules that can be operated with a CPU or an interface module.

Identification data

Information that is saved in modules and that supports the user in checking the plant configuration and locating hardware changes.

Interface module

Module in the distributed I/O system. The interface module connects the distributed I/O system via a field bus with the CPU (I/O) controller and prepared the data for the/from the I/O modules.

IO-Link

IO-Link is a point-to-point connection to conventional and intelligent sensors/actuators by unshielded standard cables in proven 3-wire technology. IO-Link is downward compatible to all DI/DQ sensors/actuators. Switching status channel and data channel are designed in proven 24 V DC technology.

MAC address

Device identification unique worldwide, which is already assigned to each PROFINET and MultiFieldbus device in the factory. Its 6 bytes are divided into 3 bytes for the manufacturer ID and 3 bytes for the device ID (serial number). The MAC address is usually legible on the device.

Modbus TCP

Modbus protocol as a communication protocol which is based on a master/device or client/server architecture and permits Ethernet TCP/IP as a further transmission technology

Module fault

Module faults can be external faults (e.g. missing load voltage) or internal faults (e.g. processor failure). Internal faults always require module replacement.

Monitoring time

→ PROFIsafe monitoring time

M-switch

Each fail-safe digital output of ET 200AL F-modules consists of a P-switch DO-P_x (current sourcing) and an M-switch DO-M_x (current sinking). The load is connected between the P-switch and M-switch. The two switches are always activated so that voltage is applied to the load.

MultiFieldbus

MultiFieldbus states that a device supports several bus protocols. For example, PROFINET, Modbus TCP and EtherNet/IP.

Nonequivalent sensor

A nonequivalent → sensor is a two-way switch that is connected to two inputs of an → F-I/O (via 2 channels) in → fail-safe systems (for → 1oo2 evaluation of sensor signals).

Parameter assignment

Parameter assignment is the transfer of parameters from the IO controller to the IO device.

Passivation

If an → F-I/O module detects a fault it switches either the affected channel or all channels to a → safe state, i.e. the channels of this F-I/O module are passivated. The F-I/O module signals the detected faults to the → F-CPU.

When passivating channels at F-I/O with inputs, the → F-System provides fail-safe values for the → safety program instead of the process values pending at the fail-safe inputs.

When passivating channels at F-I/O with outputs, the F-system returns fail-safe values (0) to the fail-safe outputs instead of the output values provided by the safety program.

PELV

Protective **E**xtra **L**ow **V**oltage = grounded protective extra-low voltage

Performance Level

Performance Level (PL) in accordance with ISO 13849-1 or EN ISO 13849-1

Potential group

Group of I/O modules that are jointly supplied with voltage.

Product version (PV) = Function version (FV)

The product version or function version provides information on the hardware version of the module.

PROFIBUS

PROcess FIeld BUS, process and fieldbus standard that is specified in IEC 61158 Type 3. Specifies the functional, electrical and mechanical characteristics of a serial bit stream fieldbus system. PROFIBUS is available with the protocols DP (= Distributed Peripherals), FMS (= Fieldbus Message Specification), PA (= Process Automation), or TF (= Technological Functions).

PROFINET

PROcess FIeld NETwork, open Industrial Ethernet standard, which continues PROFIBUS and Industrial Ethernet. A cross-manufacturer communication, automation and engineering model, defined as an automation standard by PROFIBUS International e.V.

PROFINET IO controller

Device used to address connected I/O devices (e.g. distributed I/O systems). This means that: The IO controller exchanges input and output signals with assigned I/O devices. The IO controller often corresponds with the CPU in which the automation program is running.

PROFINET IO device

Distributed field device that can be assigned to one or more IO controllers (e.g. distributed I/O system, valve terminals, frequency converters, switches).

PROFINET IO

Communication concept for the realization of modular, distributed applications in the framework of PROFINET.

PROFIsafe

Safety-oriented PROFINET I/O bus profile for communication between the → safety program and the → F-I/O module in a → fail-safe system.

PROFIsafe address

The PROFIsafe address (code name according to IEC 61784-3-3: 2010) is used to protect standard addressing mechanisms such as IP addresses. The PROFIsafe address consists of the F-source address and F-destination address. Every → fail-safe module therefore has two address portions, the F-source address and the F-destination address.

The PROFIsafe address must be configured in the hardware and network editor.

PROFIsafe monitoring time

Monitoring time for safety-related communication between the F-CPU and F-I/O

Proof test interval

Period after which a component must be forced to fail-safe state, that is, it is either replaced with an unused component, or is proven faultless.

P-switch

→ M-switch

Redundancy, availability-enhancing

Multiple instances of components with the objective of maintaining component functionality in the event of hardware faults.

Redundancy, safety-enhancing

Multiple availability of components with the aim of exposing hardware faults based on comparison; such as → 1oo2 evaluation in → fail-safe modules.

Reference potential

Potential from which the voltages of the circuits involved are observed and/or measured.

Reintegration

After the elimination of a fault, it is necessary to ensure the reintegration (depassivation) of the → F-I/O. Reintegration (switchover from fail-safe values to process values) occurs either automatically or only after a user acknowledgment in the safety program.

In the case of a fail-safe input module, the process values pending at the fail- safe inputs are made available to the safety program again after reintegration. In the case of a fail-safe output module, the → fail-safe system transfers the output values in the safety program to the fail-safe outputs again.

RIOforFA-Safety

Remote IO for Factory Automation with PROFIsafe; Profile for F-I/O

Safe Direction (SDI)

The SDI function (Safe Direction) monitors the direction of the motion.

Safe Operating Stop (SOS)

The SOS function (Safe Operating Stop) protects from unintentional motions.

Safe state

The basic principle of the safety concept in F-systems is the existence of a safe state for all process variables. For the digital F-I/O, for example, the safe state is the value "0".

Safety class

Safety level (Safety Integrity Level) SIL according to IEC 61508:2010. The higher the Safety Integrity Level, the more rigid the measures for prevention of systematic faults and for management of systematic faults and hardware failures.
The fail-safe modules support operation in safety mode up to safety class SIL3.

Safety frame

In safety mode, data are transferred between the → F-CPU and → F-I/O in a safety frame.

Safety function

A mechanism integrated in the → F-CPU and → F-I/O that enables their use in → the fail-safe system SIMATIC Safety.
According to IEC 61508:2010: A safety function is implemented by a safety system in order to maintain or force a system safe state in the event of a specific fault.

Safety Limited Speed (SLS)

The SLS function (Safely Limited Speed) monitors the calculated speeds in both directions.

Safety mode

Operating mode of → F-I/O that enables → safety-related communication via → safety frames.
The → fail-safe modules ET 200AL are designed for safety mode only.

Safety program

Safety-related user program

Safety-related communication

Communication used to exchange fail-safe data.

SELV

Safety **E**xtra **L**ow **V**oltage = potential-free safety extra-low voltage

Sensor evaluation

There are two types of sensor evaluation:
→ 1oo1 evaluation – sensor signal is read once

→ 1oo2 evaluation – sensor signal is read in twice by the same F-module and compared internally

Sensors

Sensors are used for the accurate detection of routes, positions, velocities, rotational speeds, masses, etc. in the form of digital and analog signals.

Standard mode

Operating mode of F-I/O in which standard communication is possible by means of → safety frames, but not → safety-related communication.
ET 200AL fail-safe modules are only designed for safety mode.

TIA Portal

Totally Integrated Automation Portal
The TIA Portal is the key to the full performance capability of Totally Integrated Automation. The software optimizes operating, machine and process sequences.

Value status

Binary additional information for an input signal. This additional information indicates whether or not the input signal is valid. Example: The value of the input signal is invalid if wire break has been detected or flutter monitoring has responded. In this case, exception handling is triggered in an automation function (e.g. with safe substitute value).

Index

2

24 V DC supply, 58

A

Accessories, 145
Ambient conditions
  Mechanical, 138
  Climatic, 138

Application, 57

B

Burst pulses, 135

C

Cable length, 74

Cable protection, 69

Cables, 57
  for ET-Connection, 149
  for ET connection, PUR cable, 149
  for ET-Connection, 149
  PUR cable for ET-Connection, 151
  Connecting cable for ET-Connection, 152
  Connecting cable for ET connection, PUR cable, 152
  Connecting cable for ET-Connection, 152
  Connecting cable for ET-Connection, PUR cable, 153
  for power supply, 154
  for power supply, PUR cable, 154

Cable ties, 56
Certificates
  Shipbuilding certificates, 133
Changes
  Compared with previous version, 38

Climatic ambient conditions, 138
Codes and approval
  Korea Certificate, 132
  EAC (Eurasian Conformity), 132
  WEEE mark (European Union), 132

Commissioning, 104
  Startup with PROFINET IO, 106
  Startup on EtherNet/IP, 110
  Startup on Modbus TCP, 113
  Startup on PROFIBUS DP, 116

Components, 45
Configuration
  Power supply, 69
  connect to functional earth, 70

Configuration control, 89

Configuration software, 83
Configuration variants
  ET-Connection1, 48
  ET-Connection1 and ET-Connection2, 49
  Hybrid configuration, 50

Configuring, 83
Connecting
  Conductive substrate, 71
  Non-conductive substrate, 73
  M8 plugs, 76
  M12 plugs, 77

Connecting cables, 74

D

Degree of protection, 140
Dimension drawing
  Modules, 144

Drill holes, 54

E

eCoding plug connector, 45

Electrical isolation, 66

Electromagnetic compatibility, 135

Electrostatic discharge, 135

EMC, 135

EMERGENCY-STOP device, 57

Emission of radio frequency interference, 136

ET 200AL
Area of application, 41
Configuration example, 42
ET 200AL standard modules
safety-related shutdown, 141
ET Connection
Bus cable, 46
Connector, 46
Stripping tool, 46
ET-Connection
Behavior, 122
Example
ET 200AL configuration, 42

F

Firmware update, 124
Functional earth, 70
Fuse, 58

G

German Technical Inspectorate report, 143
Grounded infeed, 63

I

I/O modules, 45
Identification data, 118
Identification label, 45
Mounting, 82
Removing, 82
Infeed
grounded, 63
non-grounded, 63
Installation position, 52
Insulation, 139
Insulation monitoring, 65
Interface module
MultiFieldbus, 45
PROFINET IO, 45
PROFIBUS DP, 45
Wiring, 75
Interface modules, 45, 45

L

Line voltage, 58

M

M12 plugs, 77
M8 plugs, 76
Maintenance, 122
Maintenance data, 118
Marking
Factory-marked, 80
Interfaces, 80
Optional, 81
Marks and approval
CE marking, 130
UKCA mark, 131
UL approval, 131
RCM Australia/New Zealand, 132
Maximum configuration
Mechanical, 47
Electrical, 48
Mechanical environmental conditions, 138
Minimum clearances, 52
Mounting, 53
Interface module, 54
I/O module, 55

O

Option handling, 89
Overall configuration, 64
Overvoltage category, 140

P

PELV, 63
Pin assignment, 77, 80
Pollution degree, 140
Power supply
Power cable, 46
Connector, 46
PROFIenergy, 108
PROFINET IO, 104, 109, 112

Protection class, 139
Protective measures, 65
Pulse-shaped disturbance variables, 135

R

Radio interference, 134
Rated voltage, 140
Reference potential
  grounded, 64
  non-grounded, 64

S

Safe electrical isolation, 63
Safety relay, 141
Screws, 53
SELV, 63
Setup, 41
Shock, 138
SIMATIC ET 200AL, 40
Sinusoidal disturbance variables, 136
Slot number, 123
Sockets, 79
Spare parts, 145
Standards
  IEC 61131-2, 133
  IEC 61010-2-201, 133
  PROFINET standard, IEC 61158 Type 10, 133
  PROFIBUS standard, IEC 61158 Type 3, 133
  IO-Link standard, IEC 61131-9, 134
  Use in industrial environments, 134
  Use in residential areas, 134
  Use in mixed areas, 134
  EtherNet/IP requirement, 134
  Modbus TCP requirement, 134
  Use in industrial burner and firing environments., 134
Switch, 58
System conditions, 57
System configuration
  Grounded reference potential, 64
  Ungrounded reference potential, 64
  Protective measures, 65

T

Test voltage, 139
TN-S grid, 63
Tool, 53
Transport and storage conditions, 137

U

Ungrounded infeed, 63

V

Vibrations, 138

W

Wires, 57

Y

Y-cable, 45