SIEMENS

SITRANS F

Coriolis Flowmeters SITRANS FC330

Operating Instructions

These Operating Instructions apply to Siemens products SITRANS FC330 with order codes commencing 7ME4633

06/2018
A5E44030648-AA

Legal information

Warning notice system

This manual contains notices you have to observe in order to ensure your personal safety, as well as to prevent damage to property. The notices referring to your personal safety are highlighted in the manual by a safety alert symbol, notices referring only to property damage have no safety alert symbol. These notices shown below are graded according to the degree of danger.

⚠ DANGER
indicates that death or severe personal injury **will** result if proper precautions are not taken.

⚠ WARNING
indicates that death or severe personal injury **may** result if proper precautions are not taken.

⚠ CAUTION
indicates that minor personal injury can result if proper precautions are not taken.

NOTICE
indicates that property damage can result if proper precautions are not taken.

If more than one degree of danger is present, the warning notice representing the highest degree of danger will be used. A notice warning of injury to persons with a safety alert symbol may also include a warning relating to property damage.

Qualified Personnel

The product/system described in this documentation may be operated only by **personnel qualified** for the specific task in accordance with the relevant documentation, in particular its warning notices and safety instructions. Qualified personnel are those who, based on their training and experience, are capable of identifying risks and avoiding potential hazards when working with these products/systems.

Proper use of Siemens products

Note the following:

⚠ WARNING
Siemens products may only be used for the applications described in the catalog and in the relevant technical documentation. If products and components from other manufacturers are used, these must be recommended or approved by Siemens. Proper transport, storage, installation, assembly, commissioning, operation and maintenance are required to ensure that the products operate safely and without any problems. The permissible ambient conditions must be complied with. The information in the relevant documentation must be observed.

Trademarks

All names identified by ® are registered trademarks of Siemens AG. The remaining trademarks in this publication may be trademarks whose use by third parties for their own purposes could violate the rights of the owner.

Disclaimer of Liability

We have reviewed the contents of this publication to ensure consistency with the hardware and software described. Since variance cannot be precluded entirely, we cannot guarantee full consistency. However, the information in this publication is reviewed regularly and any necessary corrections are included in subsequent editions.

Siemens AG
Division Process Industries and Drives
Postfach 48 48
90026 NÜRNBERG
GERMANY

Document order number: A5E44030648
Ⓟ 07/2018 Subject to change

Table of contents

Introduction 1

1.1 FC330 manual usage

Note

This manual applies to the Coriolis flowmeter SITRANS FC330

1.2 Manual usage

This document are standard delivered in electronic media with the device. Latest version can be downloaded at www.siemens.com (www.siemens.com)

1.3 Purpose of this documentation

These instructions contain all information required to commission and use the device. Read the instructions carefully prior to installation and commissioning. In order to use the device correctly, first review its principle of operation.

The instructions are aimed at persons mechanically installing the device, connecting it electronically, configuring the parameters and commissioning it, as well as service and maintenance engineers.

See also

Certificates (Page 247)

Technical support (Page 247)

QR code label (Page 248)

1.4 Document history

The following table shows major changes in the documentation compared to the previous edition.

The most important changes in the documentation when compared with the respective previous edition are given in the following table.

Edition	Note
06/2018	First edition

NOTICE
Use in a domestic environment This Class A Group 1 equipment is intended for use in industrial areas. In a domestic environment this device may cause radio interference.

1.5 Product compatibility

Edition	Remarks	Product compatibility	Compatibility of device integration package	
06/2018	First revision	HW revision 03 Compact FW revision 4.xx.xx-xx Remote FW revision 4.xx.xx-xx	Service channel: SIMATIC V8.2 Service Pack 1 or later	5.00.xx-xx
			Modbus: SIMATIC V8.2 Service Pack 1 or later	5.00.xx-xx
			HART: SIMATIC V8.2 Service Pack 1 or later	5.00.xx-xx
			HART: SITRANS DTM V4.1	5.00.xx-xx
			HART: AMS Device manager V12	5.00.xx-xx
			PROFIBUS: SIMATIC V8.2 Service Pack 1 or later	1.00.xx-xx
			PROFIBUS: AMS Device manager V12	1.00.xx-xx
			PROFIBUS : SITRANS DTM V4.1	1.00.xx-xx

1.6 Device documentation package

The user documentation package for this product includes the following documents

Document	Purpose	Intended users	Availability
Application planning sheets	*Contains all information needed to* • *plan the mechanical / physical installation and control signals before the product arrives*	*Plant design engineers, control system designers*	• *Sent to the customer with Quote* • *On documentation disk* • *Available for download from homepage*
Operating Instructions	Contains all information neeeded to • check and identify the delivered package • install and electrically connect the product • commission the product, (setting parameters via HMI menu) • operate and maintain the device on a daily basis • troubleshoot and remedy minor operation interruptions	Instrument technicians, plant operators	• On documentation disk • Available for download from homepage • Hardcopy can be purchased via PIA Life Cycle Portal
Installation manual	*Contains all information needed to* • *install and connect the hardware device to the transmitter* • *troubleshoot and remedy minor operation instructions* • *learn about the operating prinmciple of the device*	*Instrument technicians, plant operators*	*On documentation disk* • *Available for download from homepage* • *Hardcopy can be purchased via PIA Life Cycle Portal*
Compact Operating Instructions - Ex	Contains all information needed to • satisfy the Special conditions for installation of Ex-certified products	Instrument technicians, plant operators with special training in systems for hazardous areas.	• On documentation disk • Available for download from homepage • Hardcopy can be ordered via PIA Life Cycle Portal
Functions Manual	*Contains* • *descriptions of all functions that can be accessed via the local display (HMI)* • *guide to setting parameters to obtain optimum operation of the device*	*Instrument technicians, plant operators*	• *On documentation disk* • *Available for download from homepage* • *Hardcopy can be purchased via PIA Life Cycle Portal*

Document	Purpose	Intended users	Availability
Functional Safety Manual (SIL)	*Contains all information needed to* • *set up, operate and maintain the device in a safety related application (SIL)*	*System integrators with special training in functional safety systems*	• *On documentation disk* • *Available for download from homepage* • *Hardcopy can be purchased via PIA Life Cycle Portal*
Communications Manual	*Contains all information needed to integrate the system into a network.*	*Control system designers, system integrators, instrument engineers*	• *On documentation disk* • *Available for download from homepage* • *Hardcopy can be purchased via PIA Life Cycle Portal*

1.7 Items supplied

The device can be delivered as either a compact or a remote system.

Compact system

- SITRANS FC330 sensor and compact mounted transmitter
- DVD containing software, certificates and device manuals

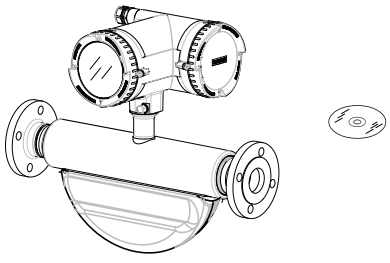

Field mount system

Remote with M12 plug connection

- SITRANS FCS300 sensor
- SITRANS FCT030 transmitter with M12 socket assembled
- Mounting bracket and cushion pad
- Sensor cable
- DVD containing software, certificates and device manuals

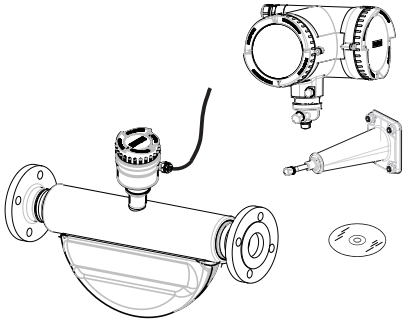

Remote with sensor terminal housing

- SITRANS FCS300 sensor
- SITRANS FCT030 transmitter with terminal housing assembled
- Mounting bracket and cushion pad
- Sensor cable
- DVD containing software, certificates and device manuals

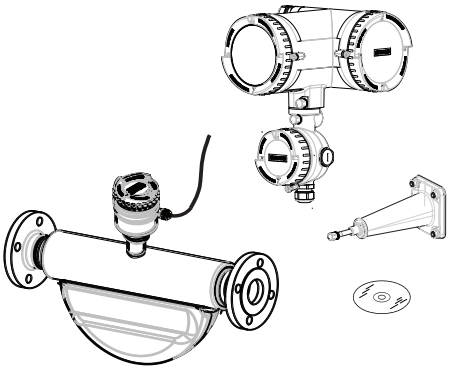

Wall mount enclosure

- SITRANS FCT030 wall mount housing transmitter
- DVD containing software, certificates and device manuals

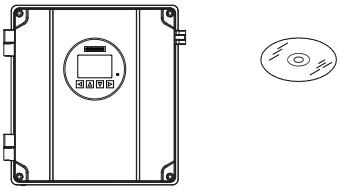

Note

Supplementary information

Supplementary product and production specific certificates are included on the SensorFlash® SD card in the transmitter socket.

Note

Scope of delivery may vary, depending on version and add-ons. Make sure the scope of delivery and the information on the nameplate correspond to your order and the delivery note.

1.8 Checking the consignment

1. Check the packaging and the delivered items for visible damages.
2. Report any claims for damages immediately to the shipping company.

3. Retain damaged parts for clarification.
4. Check the scope of delivery by comparing your order to the shipping documents for correctness and completeness.

WARNING

Using a damaged or incomplete device

Risk of explosion in hazardous areas.

- Do not use damaged or incomplete devices.

1.9 Security information

Siemens provides products and solutions with industrial security functions that support the secure operation of plants, systems, machines, and networks.

In order to protect plants, systems, machines and networks against cyber threats, it is necessary to implement – and continuously maintain – a holistic, state-of-the-art industrial security concept. Siemens' products and solutions only form one element of such a concept.

Customer is responsible to prevent unauthorized access to its plants, systems, machines and networks. Systems, machines and components should only be connected to the enterprise network or the internet if and to the extent necessary and with appropriate security measures (e.g. use of firewalls and network segmentation) in place.

Additionally, Siemens' guidance on appropriate security measures should be taken into account. For more information about industrial security, please visit:

http://www.siemens.com/industrialsecurity.

Siemens' products and solutions undergo continuous development to make them more secure. Siemens strongly recommends to apply product updates as soon as available and to always use the latest product versions. Use of product versions that are no longer supported, and failure to apply latest updates may increase customer's exposure to cyber threats.

To stay informed about product updates, subscribe to the Siemens Industrial Security RSS Feed under

http://www.siemens.com/industrialsecurity.

1.10 Transportation and storage

To guarantee sufficient protection during transport and storage, observe the following:

- Keep the original packaging for subsequent transportation.
- Devices/replacement parts should be returned in their original packaging.
- If the original packaging is no longer available, ensure that all shipments are properly packaged to provide sufficient protection during transport. Siemens cannot assume liability for any costs associated with transportation damages.

NOTICE
Insufficient protection during storage The packaging only provides limited protection against moisture and infiltration. • Provide additional packaging as necessary.

Special conditions for storage and transportation of the device are listed in Technical data (Page 191).

1.11 Notes on warranty

The contents of this manual shall not become part of or modify any prior or existing agreement, commitment or legal relationship. The sales contract contains all obligations on the part of Siemens as well as the complete and solely applicable warranty conditions. Any statements regarding device versions described in the manual do not create new warranties or modify the existing warranty.

The content reflects the technical status at the time of publishing. Siemens reserves the right to make technical changes in the course of further development.

Safety notes 2

2.1 Preconditions for use

Symbol	Explanation
⚠	Consult operating instructions

This device left the factory in good working condition. In order to maintain this status and to ensure safe operation of the device, observe these instructions and all the specifications relevant to safety.

Observe the information and symbols on the device. Do not remove any information or symbols from the device. Always keep the information and symbols in a completely legible state.

Use the device only for flow measurement in accordance with this operating instruction and observe the technical data.

⚠ WARNING

Improper device modifications

Risk to personnel, system and environment can result from modifications to the device, particularly in hazardous areas.

- Only carry out modifications that are described in the instructions for the device. Failure to observe this requirement cancels the manufacturer's warranty and the product approvals.

Note

Functional safety applications (SIL)

If the device is used in a functional safety application, refer to the functional safety manual.

2.2 Laws and directives

Observe the safety rules, provisions and laws applicable in your country during connection, assembly and operation. These include, for example:

- National Electrical Code (NEC - NFPA 70) (USA)
- Canadian Electrical Code (CEC) (Canada)

Further provisions for hazardous area applications are for example:

- IEC 60079-14 (international)
- EN 60079-14 (EU)

2.2.1 FCC Conformity

US Installations only: Federal Communications Commission (FCC) rules

WARNING

Improper device modifications

Danger to personnel, system and environment can result from improper modifications to the device.

- Changes or modifications not expressly approved by Siemens could void the user's authority to operate the equipment.

Note

- This equipment has been tested and found to comply with the limits for a Class A digital device, pursuant to Part 15 of the FCC Rules. These limits are designed to provide reasonable protection against harmful interference when the equipment is operated in a commercial environment.
- This equipment generates, uses, and can radiate radio frequency energy and, if not installed and used in accordance with the operating instructions, may cause harmful interference to radio communications. Operation of this equipment in a residential area is likely to cause harmful interference to radio communications, in which case the user will be required to correct the interference at his own expense.

Observe the test certification, provisions and laws applicable in your country during connection, assembly and operation. These include, for example:

- National Electrical Code (NEC - NFPA 70) (USA)
- Canadian Electrical Code (CEC) (Canada)

Further provisions for hazardous area applications are for example:

- IEC 60079-14 (international)
- EN 60079-14 (EU)
- For Korea only:
  이 기기는 업무용(A 급) 전자파 적합기기로서 판매자
  또는 사용자는 이 점을 주의하시기 바라며 가정 외의

  지역에서사용하는 것을 목적으로 합니다

2.2.2 Conformity with European directives

The CE marking on the device symbolizes the conformity with the following European directives:

Electromagnetic compatibility EMC 2014/30/EU	Directive of the European Parliament and of the Council on the harmonisation of the laws of the Member States relating to electromagnetic compatibility
Low voltage directive LVD 2014/35/EU	Directive of the European Parliament and of the Council on the harmonisation of the laws of the Member States relating to the making available on the market of electrical equipment designed for use within certain voltage limits
Atmosphère explosible ATEX 2014/34/EU	Directive of the European Parliament and the Council on the harmonisation of the laws of the Member States relating to equipment and protective systems intended for use in potentially explosive atmospheres
Pressure equipment directive PED 2014/68/EU	Directive of the European Parliament and of the Council on the approximation of the laws of the Member States concerning pressure equipment

The applicable directives can be found in the EC conformity declaration of the specific device.

Note

CE declaration

The CE declaration certificate is available on the SensorFlash SD card delivered with the device.

2.3 Requirements for special applications

Due to the large number of possible applications, each detail of the described device versions for each possible scenario during commissioning, operation, maintenance or operation in systems cannot be considered in the instructions. If you need additional information not covered by these instructions, contact your local Siemens office or company representative.

Note

Operation under special ambient conditions

We highly recommend that you contact your Siemens representative or our application department before you operate the device under special ambient conditions as can be encountered in nuclear power plants or when the device is used for research and development purposes.

2.4 Use in hazardous areas

Qualified personnel for hazardous area applications

Persons who install, connect, commission, operate, and service the device in a hazardous area must have the following specific qualifications:

- They are authorized, trained or instructed in operating and maintaining devices and systems according to the safety regulations for electrical circuits, high pressures, aggressive, and hazardous media.
- They are authorized, trained, or instructed in carrying out work on electrical circuits for hazardous systems.
- They are trained or instructed in maintenance and use of appropriate safety equipment according to the pertinent safety regulations.

WARNING

Use in hazardous area

Risk of explosion.

- Only use equipment that is approved for use in the intended hazardous area and labelled accordingly.
- Don't use devices that have been operated outside the conditions secified for hazardous areas. If you have used the device outside the conditions for hazardous areas permanently make all Ex markings unrecognizable on the nameplate.

WARNING

Loss of safety of device with type of protection "Intrinsic safety Ex i"

If the device has already been operated in non-intrinsically safe circuits or the electrical specifications have not been observed, the safety of the device is no longer ensured for use in hazardous areas. There is a risk of explosion.

- Connect the device with type of protection "Intrinsic safety" solely to an intrinsically safe circuit.
- Observe the specifications for the electrical data on the certificate and/or in Technical data (Page 191).

2.4.1 Special conditions for safe use FC330 field mount (compact/remote)

Special conditions for safe use

In general, it is required that:

- The transmitter electronic compartment shall not be opened when energized and when an explosive gas or dust atmosphere may be present.
- The terminal compartment may be opened when an explosive gas or dust atmosphere may be present at any time. Access power terminals by lifting the cover only when de-energized.
- Appropriate cable connectors are used.
- Substitution of components may impair Intrinsic Safety.
- Sensor and transmitter are connected to the potential equalization throughout the hazardous area.
- EN/IEC 60079-14 is considered for installation in hazardous areas.

Further information and instructions including approval-specific special conditions for safe use in Ex applications can be found in the certificates on the accompanying literature CD and at the product web page (www.siemens.com/FC430).

WARNING

Laying of cables
Explosion hazard

Cable for use in hazardous areas must satisfy the requirements for having a proof voltage of at least 500 V AC applied between the conductor/ground, conductor/shield and shield/ground.

Connect the devices that are operated in hazardous areas as per the stipulations applicable in the country of operation.

WARNING

Field wiring installation

Ensure that the national requirements of the country in which the devices are installed are met.

WARNING

Signal wiring

Input/output connections to the transmitter are required to be protected by intrinsic safe barriers at all times.

2.4.2 Special conditions for safe use FCT030 Wall mount

Special conditions for safe use

In general, it is required that:

- The terminal space may be opened when an explosive gas or dust atmosphere may be present at any time. Access power terminals by lifting the cover only when de-energized.
- Appropriate cable connectors are used.
- Substitution of components may impair Intrinsic Safety.
- Sensor and transmitter are connected to the potential equalization throughout the hazardous area.
- EN/IEC 60079-14 is considered for installation in hazardous areas.

Further information and instructions including approval-specific special conditions for safe use in Ex applications can be found in the certificates on the accompanying documentation disk and at the product web page (www.siemens.com/FC430).

WARNING

Laying of cables

Risk of explosion in hazardous areas.

Cable for use in hazardous areas must satisfy the requirements for having a proof voltage of at least 500 V AC applied between the conductor/ground, conductor/shield and shield/ground.

Connect the devices that are operated in hazardous areas as per the stipulations applicable in the country of operation.

WARNING

Field wiring installation

Risk of explosion in hazardous areas.

Ensure that the national requirements of the country in which the devices are installed are met.

WARNING

Dust layers above 5 mm

Risk of explosion in hazardous areas.

Device may overheat due to dust build up.

- Remove dust layers in excess of 5 mm.

2.4.3 Installation in hazardous areas

WARNING

Equipment used in hazardous areas

Equipment used in hazardous areas must be Ex-approved for the region of installation and marked accordingly. It is required that the special conditions for safe use provided in the manual and in the Ex certificate are followed!

Hazardous area approvals

The device is approved for use in hazardous area and has the approvals listed below. Special conditions for safe installation and operation specified by each approval authority are included in the relevant certificate.

For more info - see Technical data (Page 202)

Installation variations

Note

Requirements for safe installation

- Remote sensor FCS300 can be installed in Zone 1, Div. 1 as Intrinsically Safe or Flameproof.
- Standard remote installation with FCT030 because the connection is certified Intrinsically Safe. however flameproof seals and conduit (for IS cable) can be used.
- Requirement for IS circuit is that the maximum input voltage Vi to DSL is 20 VDC, Ii is maximum 484 mA, Pi < 2.3 W

2.4.4 Maximum temperature specifications for Ex use

Maximum temperature specifications for Ex use

FCS300 remote sensor with DSL

Temperature classification with and without dust is related to the process temperature and ambient temperature as listed below.

The maximum allowable process fluid temperatures with respect to temperature class for the device when used with potentially explosive gases in a maximum ambient temperature of +60°C are:

Ta (°C)	Maximum Process Temperature per Temperature Class (°C)			
	T6	T5	T4	T3
60	80	80	80	80
55	85	100	100	110
50	85	100	135	140
45	85	100	135	170
40	85	100	135	200
35	85	100	135	200
30	85	100	135	200

If Tprocess ≤ 85°C, maximum surface temperature = 85°C.

If Tprocess > 85°C, maximum surface temperature = process temperature

Model SFCB450A1Y1- series FCS 300 Sensor ad Pedesal Adapter:

- T4 at process temperature ≤ 100°C and Ta ≤ 58°C
- T3 at process temperature ≤ 150°C and Ta ≤ 88°C
- Temperature classes T6 and T5 are not applicable

Note

Only installation as Ex ia can be used for installation in Zone 20.

FC330 compact flowmeter

Temperature classification with and without dust is related to the process temperature and ambient temperature as listed below:

Ta (°C)	Maximum Process Temperature per Temperature Class (°C)			
	T6	T5	T4	T3
60	80	80	80	80
55	85	100	110	110
50	85	100	135	140
45	85	100	135	170
40	85	100	135	200
35	85	100	135	200
30	85	100	135	200

Model SFCB450A1Y1- series FCS 300 Sensor ad Pedesal Adapter:

- T4 at process temperature ≤ 100°C and Ta ≤ 58°C
- T3 at process temperature ≤ 150°C and Ta ≤ 88°C
- Temperature classes T6 and T5 are not applicable

FCT030 remote transmitter

Temperature classification with and without dust is as follows:

- Potentially explosive gases: T6 (85°C surface temperature)
- Dust environment (Zone 21): T85°C

2.4.5 Special conditions for safe use

Special conditions for safe use

In general, it is required that:

- The FCT030 terminal compartment may be opened when an explosive gas or dust atmosphere may be present at any time. Access power terminals by lifting the cover only when de-energized.
- Appropriate cable connectors are used.
- Substitution of components may impair Intrinsic Safety.
- Sensor and transmitter are connected to the potential equalization throughout the hazardous area.
- EN/IEC 60079-14 is considered for installation in hazardous areas.

Further information and instructions including approval-specific special conditions for safe use in Ex applications can be found in the certificates on the accompanying documentation disk and at the product web page.

WARNING

Laying of cables

Risk of explosion in hazardous areas.

Cable for use in hazardous areas must satisfy the requirements for having a proof voltage of at least 500 V AC applied between the conductor/ground, conductor/shield and shield/ground.

Connect the devices that are operated in hazardous areas as per the stipulations applicable in the country of operation.

WARNING

Field wiring installation

Risk of explosion in hazardous areas.

Ensure that the national requirements of the country in which the devices are installed are met.

Description

3

3.1 Overview

SITRANS Coriolis flow meter systems consist of a transmitter and a sensor. The following table lists the available combinations of transmitters and sensors.

Transmitter	Sensor type
FCT030	FCS300 DN 15 to DN 150 (0.5" to 6")

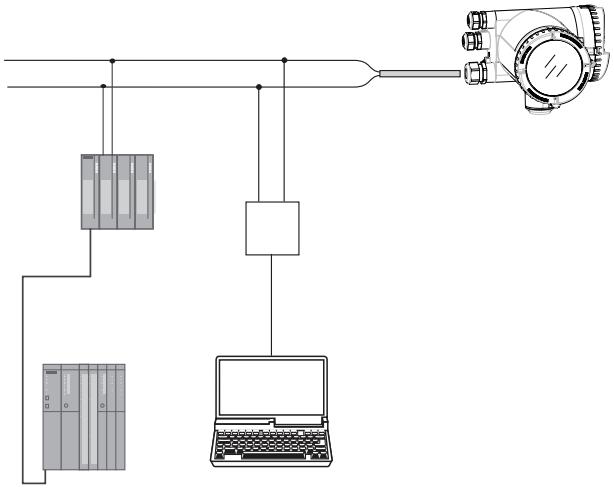

The Coriolis flowmeter can be used in a number of system configurations:

- as a field mounted transmitter and display supplied only with the necessary auxiliary power
- as part of a complex system environment, for example SIMATIC S7

3.2 Design

3.2.1 Versions

Versions

The flowmeter uses the Coriolis principle to measure flow and is available in a remote and a compact version.

- Compact version: The SITRANS FC330 is a single mechanical unit where the transmitter is directly mounted on the sensor.
- Remote version: The SITRANS FCS300 sensor unit is remotely connected to a SITRANS FCT030 transmitter. Directly mounted on the sensor, its Digital Sensor Link (DSL) performs the signal processing of all measured signals in the sensor. The 4-wire connection between the transmitter and the sensor provides power and high-integrity digital communication between the DSL and the transmitter.

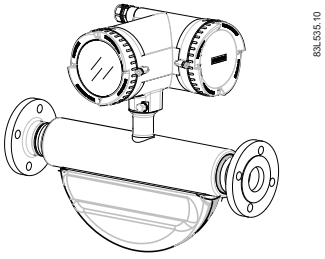

Figure 3-1 Compact version

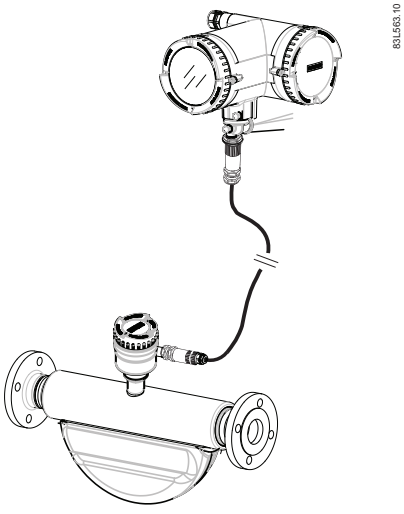

Figure 3-2 Remote version - M12 connection

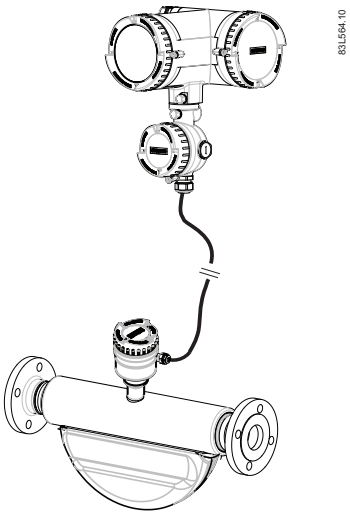

Figure 3-3 Remote version - terminated cable

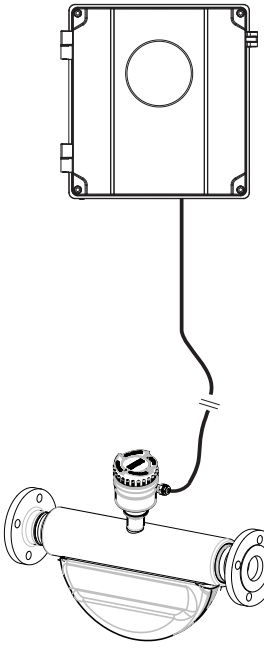

Figure 3-4 Remote version with wallbox

3.2.2 Sensor design

Sensor design

All primary process measurement of massflow, volumeflow, density and process temperature are made in the DSL/sensor front end.

The sensor comprises two parallel bent tubes welded directly to the process connections at each end via a manifold. The sensor is available in an intrinsically safe (IS) design for hazardous area installations.

The sensors are available in AISI 316L stainless steel and C4 (2.4610) nickel alloy or C22 (2.4602) nickel alloy. The enclosure is made of Stainless steel 1.4404 (AISI 316L), 1.4301 (AISI 304), 1.4308 (ASTM CF8).The maximum permissible operating pressure is determined by the respective process connection, the temperature of the medium to be measured.

Note

Ex certification requires that the threaded ports always remain closed.

In the remote configuration, the sensor front end (DSL) is available in an painted aluminum, with an ingress protection grade of IP67/NEMA 4X. For communication and power supply a 4-wire connection can be made via M12 plug and socket or cable gland/conduit entry for cable termination.

Sensor overview

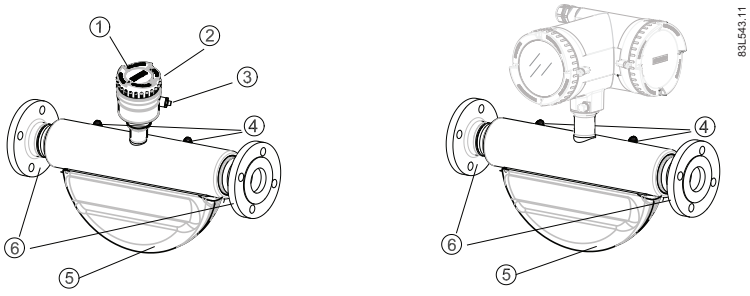

① Sensor front end (DSL) (Remote configuration only)
② Lid-lock
③ Cable feed-through (M12 socket or gland)
④
⑤ Sensor enclosure
⑥ Process connections

Figure 3-5 Overview, remote and compact configuration

Transmitter design

The transmitter reads the primary values from the sensor and calculates derived values. It provides up to four configurable I/Os. On channel 1, HART communication, PROFIBUS DP, PROFIBUS PA or Modbus RTU RS485 is possible. On channel 2,3,4 each I/O can be individually configured. A local display (human machine interface - HMI) is available, which consists of a display and four buttons for user interaction. The transmitter adds functionalities such as Standard volume flow, fractions, totalizers, dosing, access control, diagnostics, configuration and logging.

The transmitter has a modular design with discrete, replaceable electronic modules and connection boards to maintain separation between functions and facilitate field service. All modules are fully traceable and their provenance is included in the transmitter setup.

Transmitter exploded view

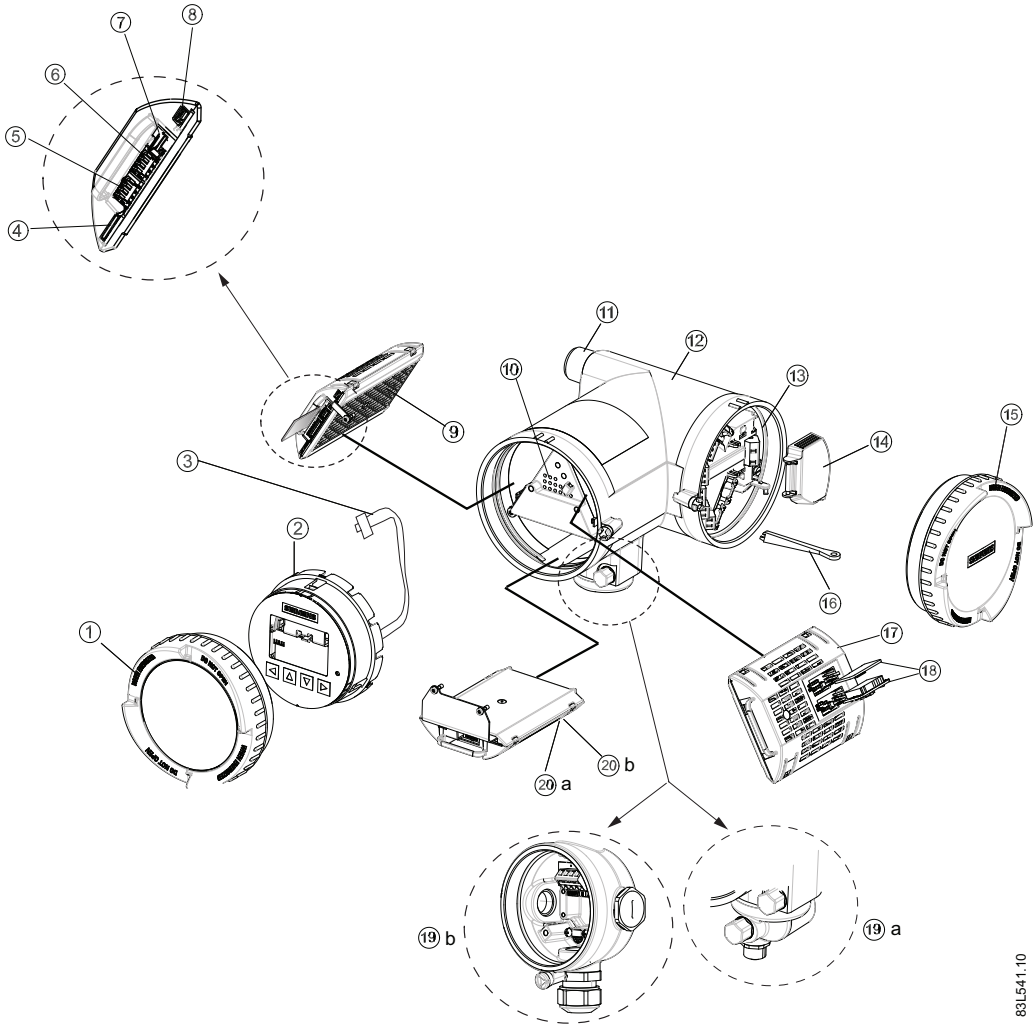

①	Display cover	⑫	Transmitter housing
②	Local display (HMI)	⑬	Terminal space
③	Connector for HMI	⑭	Power supply terminal protection cover
④	SD card (SensorFlash)	⑮	Lid for terminal connections
⑤	DIP switch (for custody transfer)	⑯	Wiring tool
⑥	DIP switch (for HART and Modbus)	⑰	I/O cassette (optional)
⑦	HMI port	⑱	I/O configuration keys (optional)
⑧	USB service port	⑲a	M12 socket
⑨	Transmitter cassette	⑲b	Terminal housing
⑩	Heatsink cover for power supply module	⑳a	Sensor module (compact version)
⑪	Cable entry	⑳b	Barrier module (remote version)

Figure 3-6 Transmitter exploded view

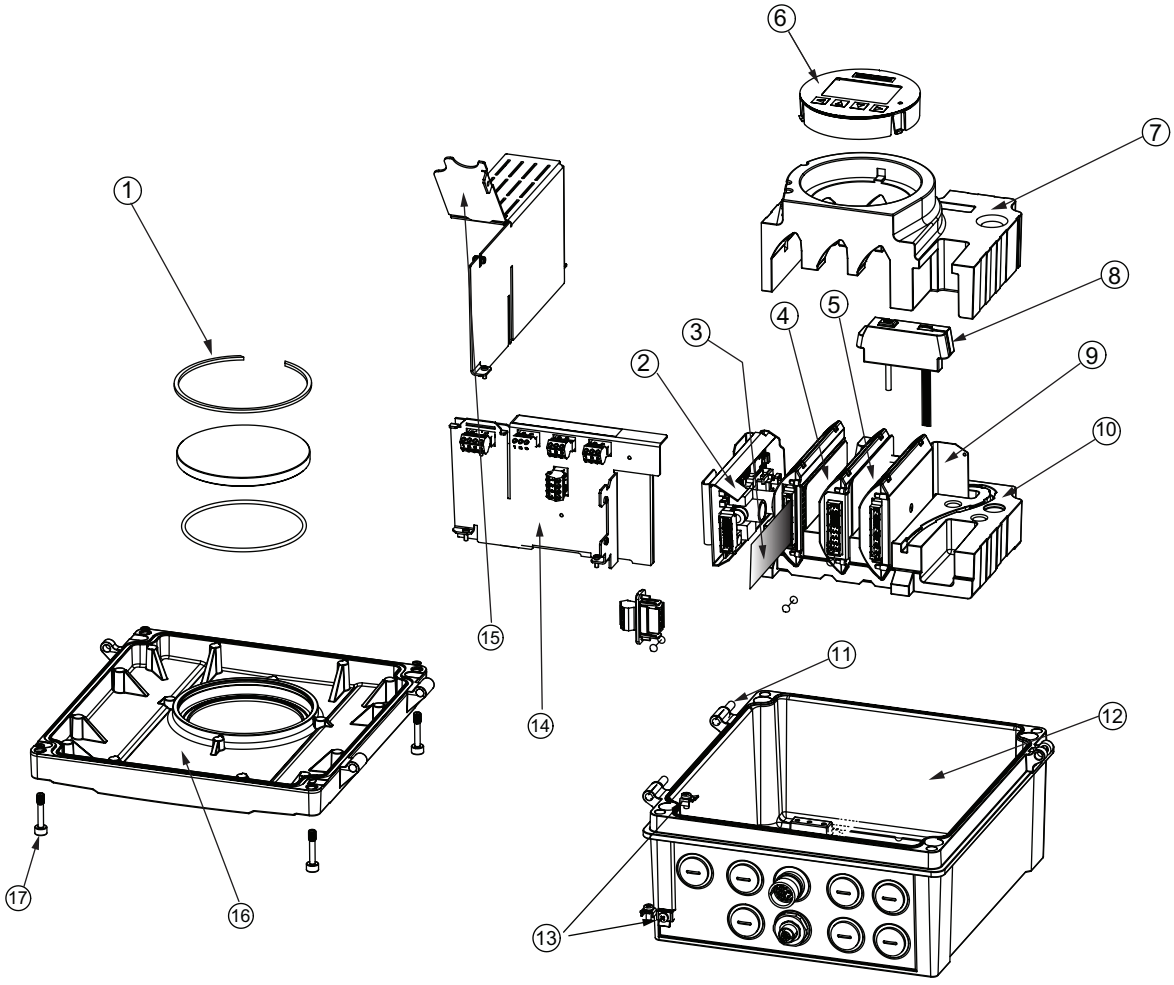

①	Display glass with retaining ring	⑩	Foam bottom
②	Power supply module (complete)	⑪	Hinge pin
③	SensorFlash (SD card)	⑫	Housing
④	Transmitter cassette	⑬	Ground connect set
⑤	IO cassette	⑭	Backplane module
⑥	HMI module	⑮	Power supply connector cover
⑦	Foam top	⑯	Front cover enclosure
⑧	Foam plugs	⑰	Front cover mounting screws
⑨	Sensor module (analog version) Barrier module (digital version)		

Figure 3-7 Wall mount housing transmitter exploded view

3.3 Approvals

Note

For further details see Approvals (Page 202).

The device is available with approvals for general purpose and for hazardous areas. In all cases, check the nameplate on your device, and confirm the approval rating.

3.4 Features

- The flowmeter can be used as HART, Modbus RTU RS485 and PROFIBUS PA/DP slave in operation on SIEMENS SIMATIC S7/PCS 7 or third party automation systems
- Available in compact and remote design
- Full graphical local display (HMI), with 6 user views and trend curves
- SensorFlash (SD card) for memory backup, logging and documentation storage (certificates etc.)
- USB service interface
- Hart communication interface (HART 7.5)
- PROFIBUS DP 12 Mbits/s
- PROFIBUS PA profile 4.0
- Modbus RTU RS485
- High immunity against process noise
- Fast response to step changes in flow
- High update rate (100 Hz) on all process values
- Configurable upper and lower alarms and warning limits for process values
- Independent low flow cut-off settings for volume flow and mass flow
- Zero-point adjustment (initiated locally on HMI panel or by host system)
- Process noise damping using digital signal processing (DSP)
- Three totalizers for summation of flow process values
- Simulation of process values
- Empty tube monitoring
- Simulation of outputs
- Simulation of alarms
- Enabling alarms for visibility on all outputs (HMI, status and communication)
- Comprehensive diagnostics (NAMUR or Siemens standard) for troubleshooting and sensor checking
- Firmware update

- Use in hazardous areas according to specification
- USB mass storage* (not available in the USA)
- Data logging of process values and parameter value change in SensorFlash
- Peak indicators - logging of min & max process peak values with time stamp information
- Alarm delay
- Damping filtering system for process values at HMI or outputs
- Spare part replacement
- Selection of active or passive output signals in none hazardous areas
- Intelligent filtering system for aerated flow
- Up to four input/output channels:
  Channel 1: can be parameterized for:
  - Profibus DP
  - Profibus PA
  - Current Hart output (4-20 mA)
  - Modbus RTU RS485

  Channel 2: Signal output can be parameterized for:
  - Current output (0/4-20 mA)
  - Pulse output
  - Frequency output
  - Status output

  Channel 3 and 4: Signal output:
  - Current output (0/4-20 mA)
  - Pulse output
  - Frequency output
  - Status output
  - Pulse or frequency redundancy mode (Channel 2 together with channel 3)

  Channels 3 and 4: Relay output; can be parameterized as:
  - Status output

  Channels 3 and 4: Signal input; can be parameterized as:
  - Totalizer control
  - Dosing control
  - Zero point adjustment
  - Freezing of process values
  - Forcing of outputs
- Current, frequency, and pulse outputs with configurable fail safe mode

- Totalizer control (resetting of totalizers)
  - Zero adjustment
  - Freezing of process values
  - Forcing of outputs
- Measurement of:
  - Volume flow
  - Mass flow
  - Standard volume flow
  - Density
  - Fraction A (mass flow or volume flow)
  - Fraction B (mass flow or volume flow)
  - Fraction A%
  - Fraction B%
  - Medium temperature
- Three totalizers for summation of mass flow, volume flow and standard volume flow, depending on setting, of:
  - Mass flow measurement
  - Volume flow measurement
  - Fraction A and B measurement (mass flow or volume flow)
  - Standard volume flow

* The SD-Card Mass storage function is not available for use in the USA. This option is not available for ordering or shall not be ordered where end user may be located within USA.

3.5 Applications

Measurement of liquids and gases

SITRANS F C Coriolis mass flowmeters are designed for measurement of a variety of liquids and gases. The flowmeters are multi-parameter devices offering accurate measurement of massflow, volumeflow, density, temperature and, depending on product variants, fraction, including industry-specific fractions.

Main applications

The main applications of the Coriolis flowmeter can be found in all industries, such as:

- Chemical & Pharma: detergents, bulk chemicals, acids, alkalis, pharmaceuticals, blood products, vaccines, insulin production
- Food & Beverage: dairy products, beer, wine, soft drinks, °Brix/°Plato, fruit juices and pulps, bottling, CO_2 dosing, CIP/SIP-liquids, mixture recipe control
- Automotive: fuel injection nozzle & pump testing, filling of AC units, engine consumption, paint robots
- Oil & Gas: filling of gas bottles, furnace control, test separators, bore-hole plasticizer dosing, water-cut metering
- Water & Waste Water: dosing of chemicals for water treatment

Installing/mounting 4

This chapter gives detailed instructions on mounting the transmitter and sensor to take best advantage of the flexible arrangements built into the product, and to aid in planning the physical locations of the flowmeter parts.

With compact types the transmitter can be rotated on the sensor pedestal through 330°.

For remote types, as well as 330° rotation on the support post, 360° rotation in the perpendicular plane is provided. The display can be rotated through 360° in 30° steps. The remote mounted transmitter can therefore be oriented in practically any direction.

With remote installations it is advisable to mount the transmitter in a location convenient for using the display, with a firm backing from a wall, beam or post.

If the process piping is subjected to high vibration, remote installation is recommended to shield the electronics from shaking.

Flow direction should always be the same as that shown by the arrow on the pedestal if possible.

4.1 Basic safety notes

WARNING

Wetted parts unsuitable for the process media

Risk of injury or damage to device.

Hot, toxic and corrosive media could be released if the process medium is unsuitable for the wetted parts.

- Ensure that the material of the device parts wetted by the process medium is suitable for the medium. Refer to the information in Technical data (Page 191).

Note

Material compatibility

Siemens can provide you with support concerning selection of sensor components wetted by process media. However, you are responsible for the selection of components. Siemens accepts no liability for faults or failures resulting from incompatible materials.

WARNING

Unsuitable connecting parts

Risk of injury or poisoning.

In case of improper mounting, hot, toxic, and corrosive process media could be released at the connections.

- Ensure that connecting parts (such as flange gaskets and bolts) are suitable for connection and process media.

WARNING

Exceeded maximum permissible operating pressure

Risk of injury or poisoning.

The maximum permissible operating pressure depends on the device version, pressure limit and temperature rating. The device can be damaged if the operating pressure is exceeded. Hot, toxic and corrosive process media could be released.

Ensure that maximum permissible operating pressure of the device is not exceeded. Refer to the information on the nameplate and/or in Technical data (Page 191).

CAUTION

Hot surfaces resulting from hot process media

Risk of burns resulting from surface temperatures above 65 °C (149 °F).

- Take appropriate protective measures, for example contact protection.
- Make sure that protective measures do not cause the maximum permissible ambient temperature to be exceeded. Refer to the information in Technical data (Page 191).

WARNING

Unprotected cable ends

Risk of explosion through unprotected cable ends in hazardous areas.

- Protect unused cable ends in accordance with IEC/EN 60079-14.

WARNING

Loss of explosion protection

Risk of explosion in hazardous areas if the device is open or not properly closed.

- Close the device as described in Installation instructions (Page 43).

CAUTION

External stresses and loads

Damage to device by severe external stresses and loads (e.g. thermal expansion or pipe tension). Process media can be released.

- Prevent severe external stresses and loads from acting on the device.

4.1.1 Installation location requirements

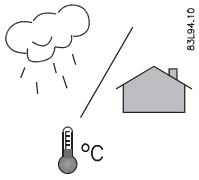

SITRANS F flowmeters with minimum IP67/NEMA 4X enclosure rating are suitable for indoor and outdoor installations.

Process pressure and medium temperature

If applicable, make sure that specifications for rated process pressure (PS) and medium temperature (TS) plus ambient temperature that are indicated on the device nameplate / label will not be exceeded.

Aggressive atmospheres

Ensure that the device is suitable for the application and that it is installed where there is no risk of penetration of aggressive vapors.

Direct sunlight

Prevent the device from overheating or materials becoming brittle due to UV exposure by protecting it from direct sunlight. Make sure that the maximum permissible ambient temperature is not exceeded. Refer to the information in Installation in hazardous areas (Page 23).

WARNING

Equipment used in hazardous areas

Risk of explosion in hazardous areas.

Special requirements apply to the location and installation of the device. See Installation in hazardous areas.

WARNING

Strong vibrations

Risk of explosion in hazardous areas.

- In plants with strong vibrations, mount the transmitter in a low vibration environment.

See also

Operating conditions (Page 200)

NOTICE
Strong vibrations Damage to device. • In installations with strong vibrations, mount the transmitter in a low vibration environment.

4.1.2 Proper mounting

⚠ WARNING
Incorrect mounting at Zone 0 Risk of explosion in hazardous areas. • Ensure sufficient tightness at the process connection. • Observe the standard IEC/EN 60079-14.

⚠ CAUTION
Loss of type of protection Damage to device if the enclosure is open or not properly closed. The type of protection specified on the nameplate or in Technical data (Page 191) is no longer guaranteed. • Make sure that the device is securely closed.

NOTICE
Incorrect mounting The device can be damaged, destroyed, or its functionality impaired through improper mounting. • Before installing ensure there is no visible damage to the device. • Make sure that process connectors are clean, and suitable gaskets and glands are used. • Mount the device using suitable tools. Refer to the information in Technical data (Page 191).

4.2 Installation instructions

4.2.1 Transmitter installation

Mounting on wall

1. Prepare holes with aid of mounting bracket, see Mounting bracket (Page 225).
2. Fasten mounting bracket with black cushion pad to wall (torque 10 Nm).

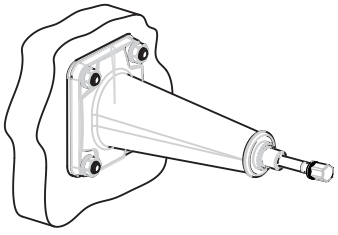

Mounting on pipe

1. Mount mounting bracket with cushion pad on pipe using fastening brackets/U-bolts and supplied pipe adaptor. Note: U-bolts and other miscellaneous hardware are not supplied with the flowmeter.
2. Tighten nuts (torque: 10 Nm).

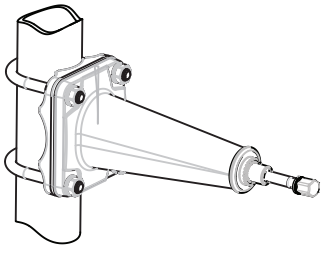

Note

Hygienic applications

If the device is wall or pipe-mounted in a hygienic application, **always** use domed nuts.

4.2.1.1 Mounting the transmitter

1. Remove locking cap from mounting bracket.
2. Mount transmitter on mounting bracket taking care that the flutes on the mating faces are correctly engaged.

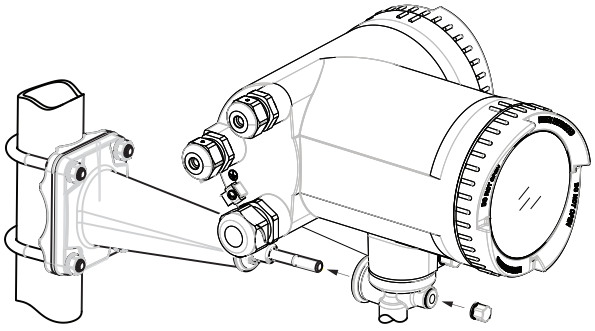

3. Firmly tighten locking cap on mounting bracket (torque: 25 Nm).

4.2.1.2 Turning the transmitter

Horizontal rotation

1. Unscrew cap from lock screw.
2. Loosen lock screw at transmitter pedestal using 5 mm Allen key.
3. Carefully rotate transmitter into desired position.

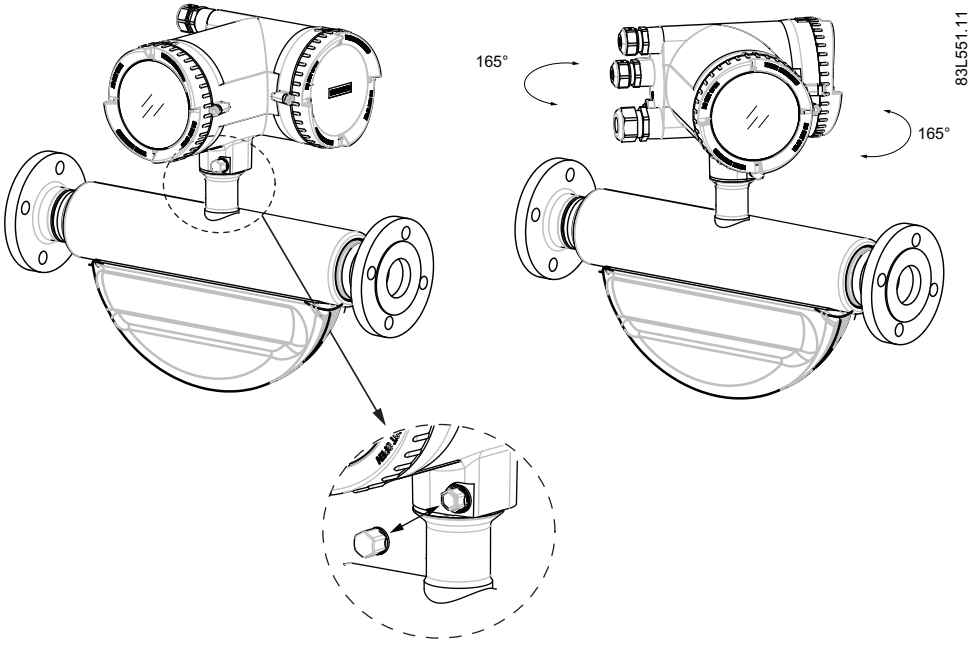

4. Firmly tighten lock screw (torque: 10 Nm).
5. Replace cap onto lock screw (torque: 10 Nm).

4.2.1.3 Turning the transmitter (remote version)

In a configuration with external DSL the transmitter can be turned horizontally and tilted vertically.

Horizontal rotation

1. Unscrew cap from lock screw.
2. Loosen lock screw at transmitter pedestal using 5 mm Allen key.
3. Carefully rotate transmitter into desired position.

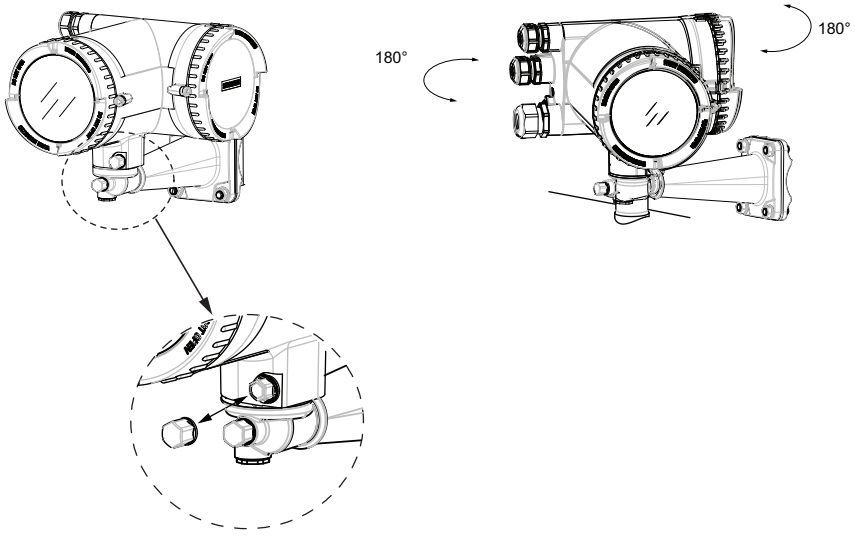

4. Firmly tighten lock screw (torque: 10 Nm).
5. Replace cap onto lock screw (torque: 10 Nm).

Vertical rotation

1. Loosen locking cap at end of mounting bracket by three turns.
2. Carefully loosen and rotate transmitter into desired position (15° steps).

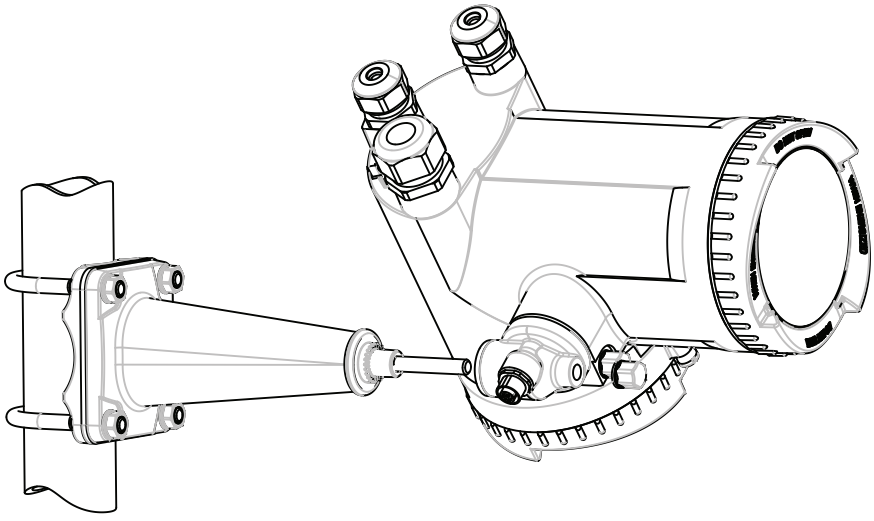

3. Firmly tighten locking cap (torque: 25 Nm).

4.2.1.4 Turning the local display

The local display can be turned in steps of 30° in order to optimize the viewing angle.

1. Remove lid lock screw of display cover.
2. Remove display cover.
3. Use a small screwdriver or blade to loosen the three retaining clips within the transmitter.
4. Carefully pull out local display.
5. Turn display into desired position.

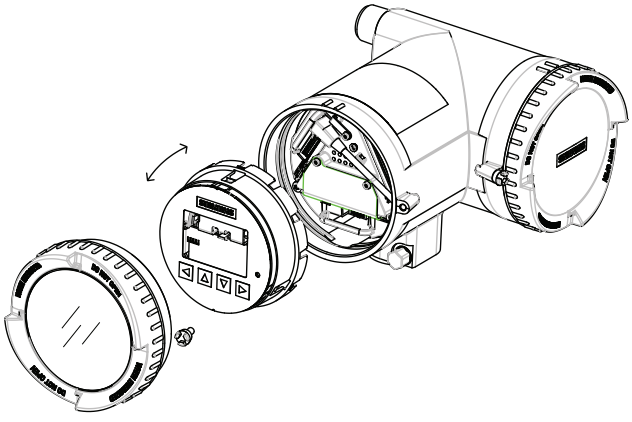

6. Carefully push display back into housing. Use a small screwdriver or blade to open the three retaining clips within the transmitter when pushing the display home.

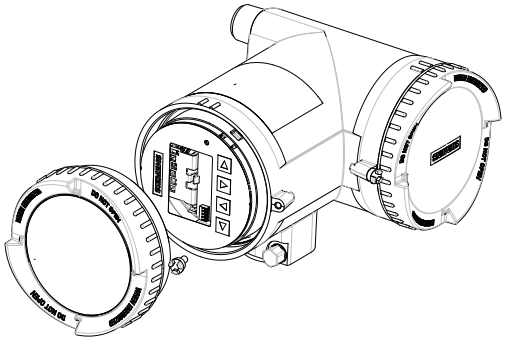

7. Remove O-ring from lid.
8. Reinstall display cover until mechanical stop. Wind back lid by one turn.
9. Mount O-ring by pulling it over the display cover and turn display cover until you feel friction from the O-ring on both sides. Wind display cover further by one quarter of a turn to seal on the O-ring.
10. Reinstall and tighten lid lock screw.

4.2.1.5 Wall mount housing

Mounting on wall

Mounting on wall

1. Prepare holes for the four screws (M6x100 or equivalent). Screw head diameter: max. 13.5 mm; screw shaft diameter: max. 6 mm.

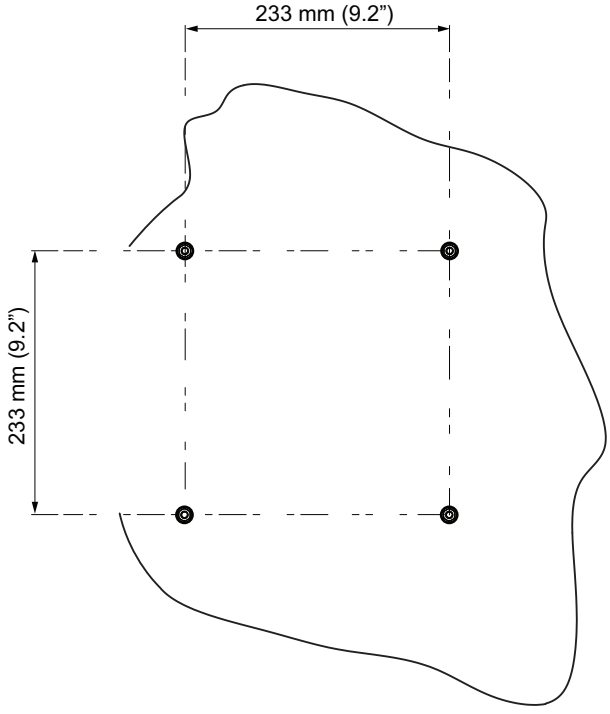

2. Mount transmitter and tighten screws.

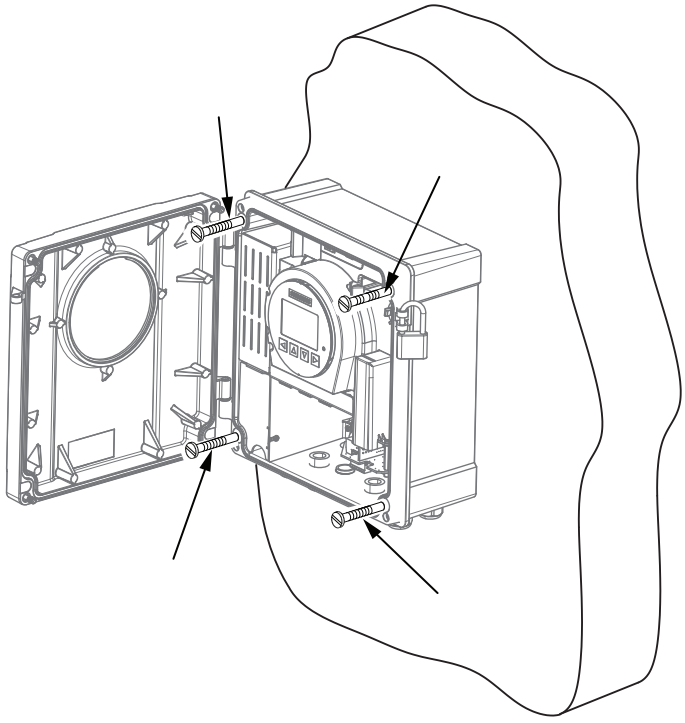

Note

Mounting on pipe or in panel

For mounting on pipe or in panel, see the installation instructions given in the instruction A5E38640586 which is provided with the optional mounting bracket kit.

Mounting on pipe

Mounting on pipe

1. Mount mounting bracket on pipe using fastening brackets/U-bolts.

   Note

   U-bolts and other miscellaneous hardware are not supplied with the flowmeter.

2. Tighten nuts (torque: 10 Nm).

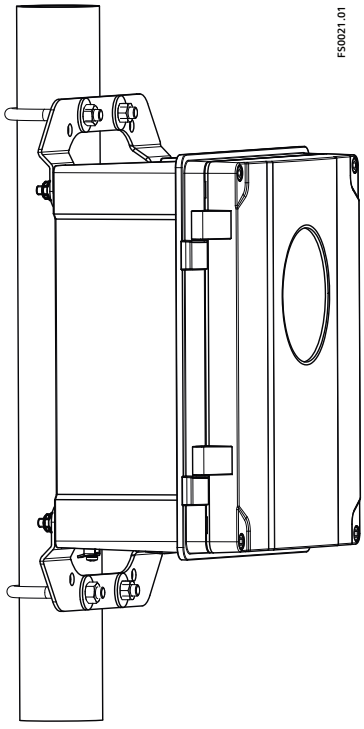

Mounting in front panel

Mounting in front panel

1. Cut out a hole in panel as shown.

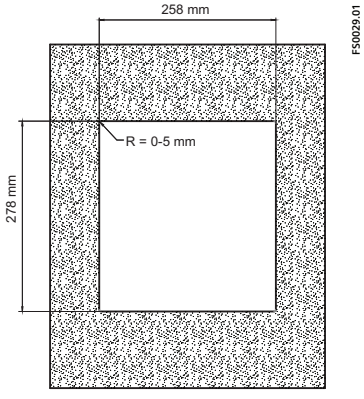

Figure 4-1 Panel cut-out dimensions

2. Remove lid from transmitter housing.
3. From the front of the panel:
   – Insert housing in cut-out hole.

4. From the back of the panel:
   – Mount mounting bracket on transmitter housing using four hex socket screws (M6 x 60 or equivalent), four hexagon nuts (M6) with flanges, a 5 mm Allen key, and a 10 mm wrench.
5. Use four hex head screws (M8 x 100), four hexagon nuts (M8), and two wrenches (13 mm); and repeat the following for each of the four mounting screws:
   – From front side of mounting bracket: Put screw ① into one of the outer holes.
   – From back side of mounting bracket: Screw nut ② on screw.
   – Bolt until screw lies against panel wall.

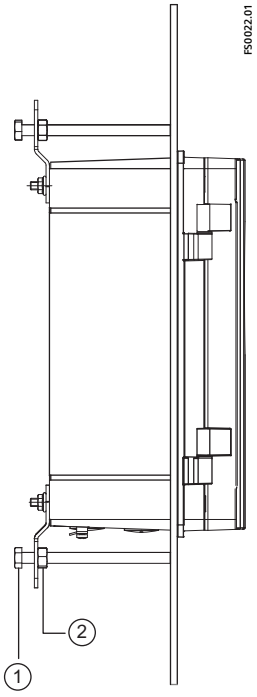

6. Tighten screws.
7. Remount lid.

⚠ CAUTION

Opening lid

Care must be taken when opening the lid to avoid the lid falling.

Note

Hygienic applications

If the device is wall or pipe-mounted in a hygienic application, **always** use domed nuts.

4.2.2 Sensor installation

4.2.2.1 Determining a location

⚠ CAUTION
Electromagnetic fields Do not install the flowmeter in the vicinity of strong electromagnetic fields, for example near motors, variable frequency drives, transformers etc.

Upstream / downstream

- No pipe run requirements, that is straight inlet/outlet sections are not necessary.
- Avoid long drop lines downstream from the sensor to prevent process media separation causing air / vapor bubbles in the tube (min. back pressure: 0.2 bar).
- Avoid installing the flowmeter immediately upstream of a free discharge in a drop line.

Location in the system

The optimum location in the system depends on the application:

- Liquid applications
  Gas or vapor bubbles in the fluid may result in erroneous measurements, particularly in the density measurement.
  - Do not install the flowmeter at the highest point in the system, where bubbles will be trapped.
  - Install the flowmeter in low pipeline sections, at the bottom of a U-section in the pipeline.

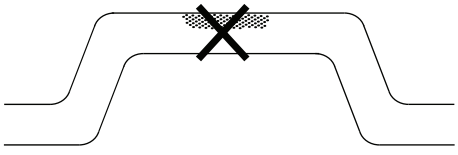

Figure 4-2 Liquid applications, wrong location with trapped air/gas

- Gas applications
  Vapor condensation or oil traces in the gas may result in erroneous measurements.
  - Do not install the flowmeter at the lowest point of the system.
  - Install a filter.

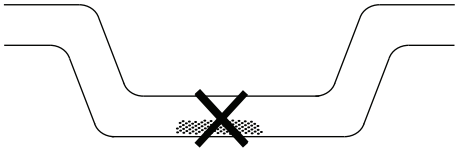

Figure 4-3 Gas applications, wrong location with trapped oil

4.2.2.2 Orientation of the sensor

Flow direction

The calibrated flow direction is indicated by the arrow on the sensor. Flow in this direction will be indicated as positive by default. The sensitivity and the accuracy of the sensor do not change with reverse flow.

The indicated flow direction (positive/negative) is configurable.

⚠ CAUTION
Accurate measurement The sensor must always be completely filled with process media in order to measure accurately.

NOTICE
Orienting the sensor To avoid water or moist ingress, transmitters should be oriented with cable entrances aiming downwards.

Orienting the sensor

The sensor operates in any orientation. The optimal orientation depends on the process fluid and the process conditions. Siemens recommends orienting the sensor in one of the following ways:

1. Vertical installation with an upwards flow (self-draining)

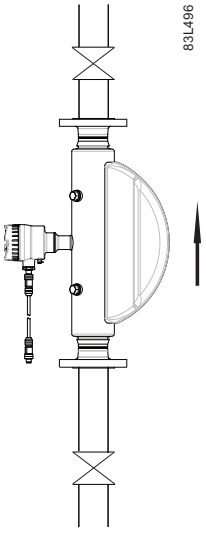

Figure 4-4 Vertical orientation, upwards flow

2. Horizontal installation, tubes down (recommended for liquid applications)

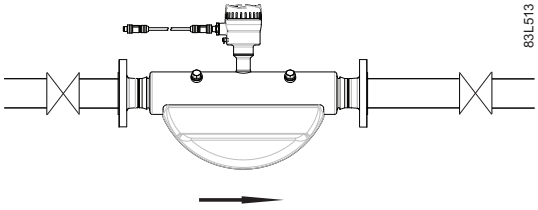

Figure 4-5 Horizontal orientation, tubes down

3. Horizontal installation, tubes up (recommended for gas applications)

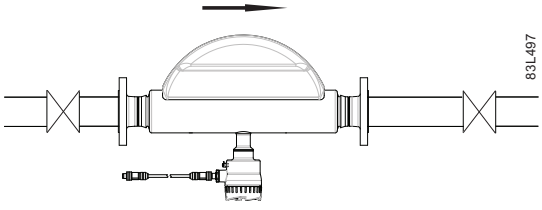

Figure 4-6 Horizontal orientation; tubes up

Note

Hygienic applications

In EHEDG certified applications the flowmeter must be installed vertically as shown in 1 above.

4.2.2.3 Installation in a drop line

Installation in a drop line

Installation in a drop line is only recommended if a pipeline reduction or orifice with a smaller cross-section can be installed to create back-pressure and prevent the sensor from being partially drained while measuring.

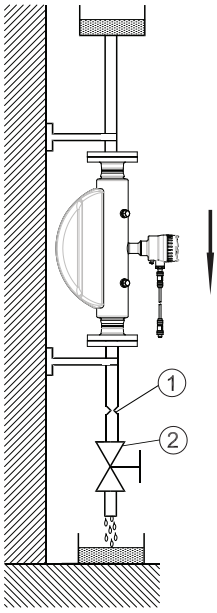

① Back pressure orifice

② On / off valve

Figure 4-7 Installation in drop line

4.2.2.4 Mounting the sensor

- Install the sensor in well-supported pipelines in order to support the weight of the flowmeter.
- Center the connecting pipelines axially in order to assure a stress-free installation. The flowmeter must not be used to bring the rest of the pipework into line; make sure the pipework is correctly aligned before inserting the flow sensor.
- Install two supports or hangers symmetrically and stress-free on the pipeline in close proximity to the process connections.

Note

Handling

Never lift the flowmeter using the housing, that is always lift the sensor body.

Avoid vibrations

- Make sure that any valves or pumps upstream of the sensor do not cavitate and do not send vibrations into the sensor.
- Decouple vibrating pipeline from the flow sensor using flexible tube or couplings.

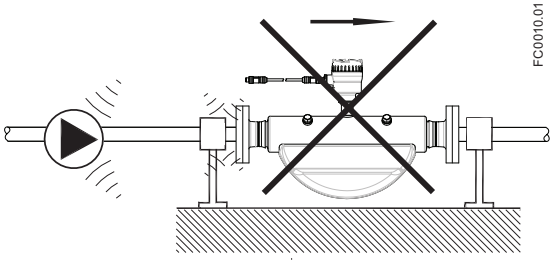

Figure 4-8 Non-flexible pipes not recommended in vibrating environment

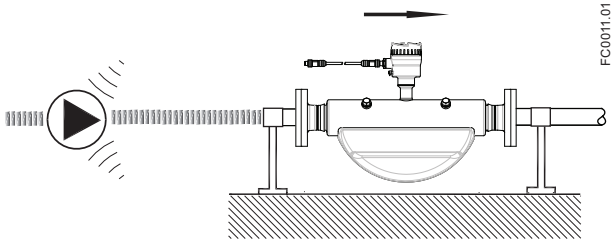

Figure 4-9 Flexible pipes recommended in vibrating environment

Avoid cross talk

If operating more than one flowmeter in one or multiple interconnected pipelines there is a risk of cross talk.

Prevent cross talk in one of the following ways:

- Mount sensors on separate frames
- Decouple the pipeline using flexible tube or couplings

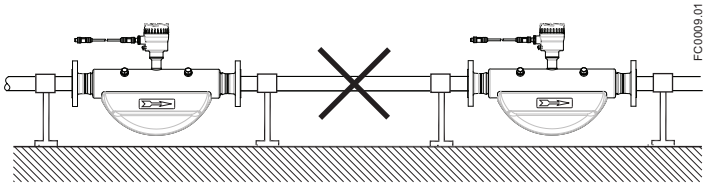

Figure 4-10 High risk of cross talk when using non-flexible pipes

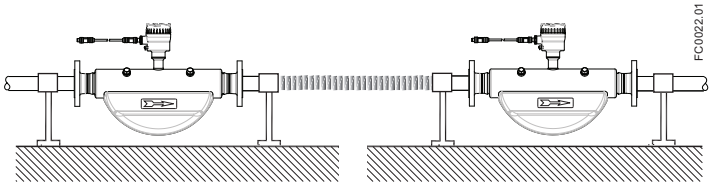

Figure 4-11 Low risk of cross talk when using flexible pipes and separate frames

4.2.2.5 Hydrostatic testing

The flowmeter is pressure-tested before delivery to 1.5 times the rated working pressure of the sensor.

In all cases the maximum allowed hydrostatic test pressure (MATP) of the flowmeter is 1.5 times the marked MAWP (PS) at 20 °C.

Pressure test of a completed flow system with piping and other components can be done at pressures no higher than 1.5 times the marked MAWP (PS) at 20 °C of the lowest rated system component.

4.2.2.6 Installing with insulation

Insulation is added to pipes and equipment for two reasons:

- To protect personnel from exposure to hot or cold surfaces, thereby preventing burns and other injuries
- To prevent heat loss into or out of the process, thereby preserving the process temperature and process medium conditions.

In both cases, insulation can have the unexpected effect of shrouding other attached components not intended or designed for the process temperatures. When installing an FCS300 sensor with insulation, observe the following rules:

- Do not cover any part of the transmitter pedestal. The pedestal is designed to separate the process temperature from the ambient around the DSL or transmitter electronics housing.
- Form a 90° cone around the pedestal, as shown below. (add graphic)
- Allow free movement of air around the electronics housing to allow temperature equalisation to occur at all times.

Note

The pedestal has sufficient internal separation from the measuring tubes such that if the main body of the sensor is insulated, the process medium will not be unduly exposed by the cone around the pedestal.

4.3 Disassembly

WARNING

Incorrect disassembly

The following risks may result from incorrect disassembly:

- Injury through electric shock

- Risk through emerging media when connected to the process

- Risk of explosion in hazardous area

In order to disassemble correctly, observe the following:

- Before starting work, make sure that you have switched off all physical variables such as pressure, temperature, electricity etc. or that they have a harmless value.
- If the device contains hazardous media, it must be emptied prior to disassembly. Make sure that no environmentally hazardous media are released.
- Secure the remaining connections so that no damage can result if the process is started unintentionally.

Connecting 5

5.1 Basic safety notes

WARNING

Unsuitable cables, cable glands and/or plugs

Risk of explosion in hazardous areas.

- Use only cable glands/plugs that comply with the requirements for the relevant type of protection.
- Tighten the cable glands in accordance with the torques specified in Technical data (Page 191).
- Close unused cable inlets for the electrical connections.
- When replacing cable, glands use only cable glands of the same type.
- After installation, check that the cables are seated firmly.

WARNING

Incorrect conduit system

Risk of explosion in hazardous areas as result of open cable inlet or incorrect conduit system.

- In the case of a conduit system, mount a spark barrier at a defined distance from the device input. Observe national regulations and the requirements stated in the relevant approvals.

WARNING

Hazardous contact voltage

Risk of electric shock in case of incorrect connection.

- For the electrical connection specifications, refer to the information in Technical data (Page 191).
- At the mounting location of the device observe the applicable directives and laws for installation of electrical power installations with rated voltages below 1000 V.

WARNING

Missing PE/ground connection

Risk of electric shock.

Depending on the device version, connect the power supply as follows:

- **Power plug**: Ensure that the used socket has a PE/ground conductor connection. Check that the PE/ground conductor connection of the socket and power plug match each other.
- **Connecting terminals**: Connect the terminals according to the terminal connection diagram. First connect the PE/ground conductor.

WARNING

Improper power supply

Risk of explosion in hazardous areas as result of incorrect power supply, e.g. using direct current instead of alternating current.

- Connect the device in accordance with the specified power supply and signal circuits. The relevant specifications can be found in the certificates, in Technical data (Page 191) or on the nameplate.

WARNING

Lack of equipotential bonding

Risk of explosion through compensating currents or ignition currents through lack of equipotential bonding.

- Ensure that the device is potentially equalized.

Exception: It may be permissible to omit connection of the equipotential bonding for devices with type of protection "Intrinsic safety Ex i".

WARNING

Unprotected cable ends

Risk of explosion through unprotected cable ends in hazardous areas.

- Protect unused cable ends in accordance with IEC/EN 60079-14.

WARNING

Improper laying of shielded cables

Risk of explosion through compensating currents between hazardous area and the non-hazardous area.

- Shielded cables that cross into hazardous areas should be grounded only at one end.
- If grounding is required at both ends, use an equipotential bonding conductor.

WARNING

Uncovered non-intrinsically safe circuits

Risk of explosion in hazardous areas or electric shock when working on non-intrinsically safe circuits.

If intrinsically safe and non-intrinsically safe circuits are operated in an enclosure with the type of protection "Increased safety Ex e", the connections of the non-intrinsically safe circuits must be additionally covered.

- Ensure that the cover of the non-intrinsically safe circuits complies with degree of protection IP30 or higher according to IEC/EN 60529.
- Separate connections of the non-intrinsically safe circuits in accordance with IEC/EN 60079-14.

WARNING

Insufficient isolation of intrinsically safe and non-intrinsically safe circuits

Risk of explosion in hazardous areas.

- When connecting intrinsically safe and non-intrinsically safe circuits ensure that isolation is carried out properly in accordance with local regulations for example IEC 60079-14.
- Ensure that you observe the device approvals applicable in your country.

WARNING

Connecting device in energized state

Risk of explosion in hazardous areas.

- Connect devices in hazardous areas only in a de-energized state.

Exceptions:

- Devices having the type of protection "Intrinsic safety Ex i" may also be connected in energized state in hazardous areas.
- Exceptions for type of protection "Increased safety ec" (Zone 2) are regulated in the relevant certificate.

WARNING

Incorrect selection of type of protection

Risk of explosion in areas subject to explosion hazard.

This device is approved for several types of protection.

1. Decide in favor of one type of protection.
2. Connect the device in accordance with the selected type of protection.
3. In order to avoid incorrect use at a later point, make the types of protection that are not used permanently unrecognizable on the nameplate.

NOTICE

Ambient temperature too high

Damage to cable sheath.

- At an ambient temperature ≥ 60 °C (140 °F), use heat-resistant cables suitable for an ambient temperature at least 20 °C (36 °F) higher.

NOTICE

Condensation in the device

Damage to device through formation of condensation if the temperature difference between transportation or storage and the mounting location exceeds 20 °C (36 °F).

- Before taking the device into operation let the device adapt for several hours in the new environment.

Note

Electromagnetic compatibility (EMC)

You can use this device in industrial environments, households and small businesses.

For metal housings there is an increased electromagnetic compatibility compared to high-frequency radiation. This protection can be increased by grounding the housing, see Connecting (Page 59).

Note

Improvement of interference immunity

- Lay signal cables separate from cables with voltages > 60 V.
- Use cables with twisted wires.
- Keep device and cables at a distance from strong electromagnetic fields.
- Take account of the conditions for communication specified in the Technical data (Page 191).
- Use shielded cables to guarantee the full specification according to HART/PA/FF.

5.2 Connecting FC330

This chapter describes how to wire up the device.

The following steps must be carried out:

- Connecting the DSL and the transmitter (Page 63) (only remote version)
- Preparing for the transmitter connections (Page 67)

- Choose the following connection to either HART, Modbus or Profibus
  - Connecting the Current HART, CH1 (Page 69)
  - Connecting the Modbus (CH1) (Page 72)
  - Connecting the Profibus (CH1) (Page 73)
- Connecting the power supply - Field mount (Page 77)
- Finishing the transmitter connection (Page 80)

5.2.1 Cable requirements

Cable specifications

- When installing sensor cable, use cable with at least same degree of protection as the sensors. It is recommended to use cables supplied by Siemens:
  - blue cables for installation of intrinsically safe circuits in hazardous areas
  - gray cables for installation of non-intrinsically safe circuits

  Further information on Siemens-supplied cables, see Sensor cable specifications HART (Page 198).
- The wire length inside the connection compartment, from the cable gland to the terminals, must be kept as short as possible. Wire loops in the terminal compartment must be avoided.
- To guarantee the degree of ingress protection, ensure that both ends of the cables are given equivalent protection from ingress of moisture.

WARNING

Cable requirements

Cables must be suitable for the temperature (at least 70 °C) and be flammability-rated to at least V-2.

Note

Output cables

If long cables are used in noisy environments, it is recommended to use shielded cables.

5.2.2 Transmitter power supply and I/Os connection

5.2.2.1 Connecting the DSL and the transmitter

The following only applies to remote configurations.

Wiring DSL (sensor) and transmitter (M12)

The DSL is provided with a preformed cable terminated with M12 style stainless steel weather-proof plugs.

The cable screen is physically and electrically terminated within the body of the plug.

Take care when handling the cable and passing it through cable ducting that the plug is not subjected to excessive tension (pulling) as the internal connections may be disengaged.

Note

Never pull the cable by the plug - only by the cable itself.

1. Connect DSL using the supplied 4-wire cable with M12 connectors.

   Note
   Grounding

   The DSL cable screen is mechanically connected to the grounding terminal (PE), only when the M12 plug is correctly tightened.

Wiring sensor and transmitter (sensor terminal compartment)

A: Prepare the cable by stripping it at both ends.

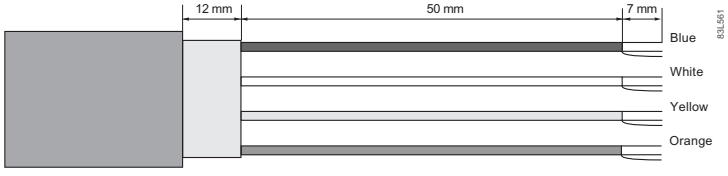

Figure 5-1 Cable end

B: Connecting sensor terminal compartment

1. Remove lock screw and remove lid.
2. Remove one of the blind plugs and fit cable gland.
3. Remove cap and ferrule from cable gland and slide onto cable.
4. Push cable through open gland; anchor cable with clamp bar. Ensure that the clamp does not earth the screen. Apply heat-shrink sleeve to make sure the screen is only earthed at the sensor end.

5. Connect wires to terminals according to list below.

Terminal number	Description	Wire color (Siemens)
1	0+	Orange
2	0 V	Yellow
3	RS485 / B	White
4	RS485 / A	Blue

6. Assemble and tighten cable gland
7. Remove O-ring from lid.
8. Reinstate lid and screw in until mechanical stop. Wind back lid by one turn.
9. Mount O-ring by pulling it over the lid and tighten lid until you feel friction from the O-ring on both sides. Wind lid further by one quarter of a turn to seal on the O-ring.
10. Reinstate and tighten lid lock screw

Connecting sensor DSL

1. Remove lock screw and remove DSL lid.
2. Undo the flexible strap.
3. Disconnect sensor connection from DSL cassette.
4. Loosen mounting screw using a TX10 Torx driver and remove DSL cassette from housing.
5. Remove cap and ferrule from cable gland and slide onto cable.
6. Push cable through open gland; anchor cable screen and wires with clamp bar.
7. Remove terminal block from DSL cassette.

8. Connect wires to terminals according to list below.

Terminal number	Description	Wire color (Siemens cable)
1	0+	Orange
2	0 V	Yellow
3	RS485 / B	White
4	RS485 / A	Blue

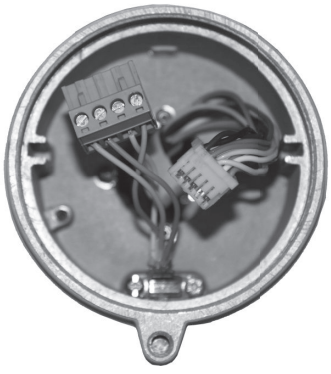

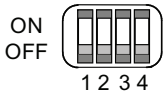

9. Ensure the DIP switches are all set to OFF.
10. Reinstate DSL cassette including mounting screw.
11. Connect sensor connection and sensor cable plugs.
12. Restore flexible strap around all wires.

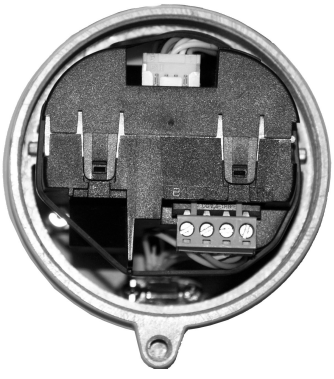

13. Assemble and tighten cable gland.
14. Remove O-ring from DSL lid.
15. Reinstate lid and screw in until mechanical stop. Wind back lid by one turn.
16. Mount O-ring by pulling it over the DSL lid and tighten lid until you feel friction from the O-ring on both sides. Wind lid further by one quarter of a turn to seal on the O-ring.
17. Reinstate and tighten lid lock screw.
18. Close and secure DSL lid including lock screw. Turn the lid until you can feel the friction of the O-ring. From this point turn the lid ¼ turn to be tight.

5.2.2.2 Preparing for the transmitter connections

WARNING

Access to terminal compartment

As long as the device is energized, the lid of the housing on the sensor connection area may only be opened by qualified personnel.

Before removing the terminal cover, the auxiliary power must be switched off from all poles.

Following installation, the terminal cover must be screwed back on again.

1. Remove blind plugs where required and mount cable glands.

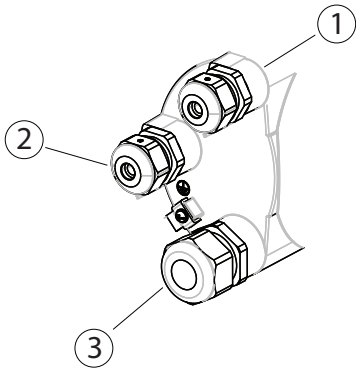

① Input/output connection (channels 2 to 4)
② Power supply connection
③ Current output/communication outputs (channel 1)

2. Remove lid lock screw for terminal connections lid.
3. Remove lid for terminal connections.

A label showing the configuration is placed at the back of the terminal connections lid.

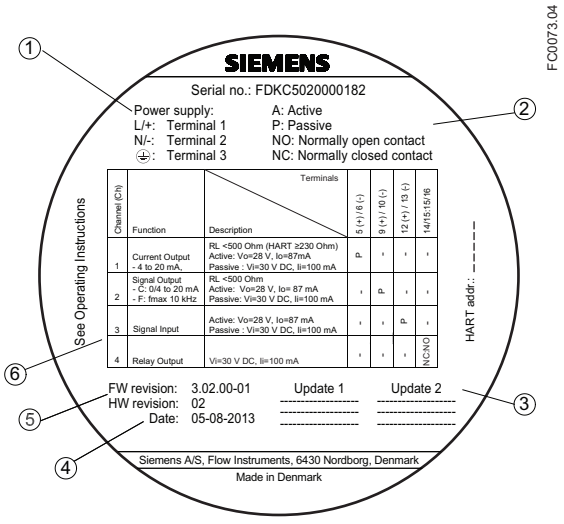

①	Power supply connections	L/+	Terminal 1
		N/-	Terminal 2
		⏚	Terminal 3
②	Key to symbols	A	Configured as active input/output
		P	Configured as passive input/output
		NO	Connected as normally open contact
		NC	Connected as normally closed contact

③ Updates (to be filled in on firmware and hardware updates)

④ Device configuration date

⑤ Initial firmware and hardware revisions

⑥ Configuration of channels 1, 2, 3 and 4

Figure 5-2 Configuration label

Terminal layout

Field mount version	Wall box version
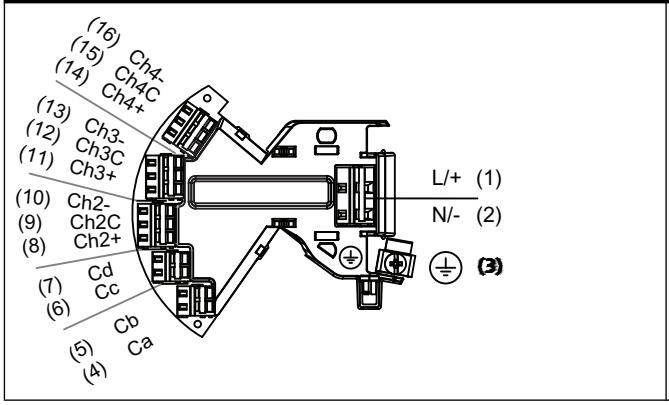	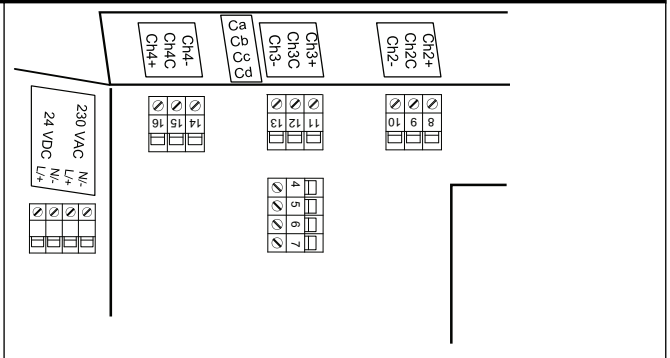

For configuration of the inputs/outputs, see table in section Connecting channels 2 to 4 (Page 74).

The following table shows:

- Which cable with which terminal
- Hardware and software configuration of the channels

HW configuration	SW configuration	Terminals															
		Power Supply			Channel 1				Channel 2			Channel 3			Channel 4		
		1	2	3	4	5	6	7	8	9	10	11	12	13	14	15	16
Power Supply		L/+	N/-	⏚													
Channel 1 HART	Current output HART				+ Active	Common -											
						Common +	- Passive										
Channel 1 Modbus					In - A	In - B											
							Out - A	Out - B									
Channel 1 Profibus					In - A	In - B											
							Out - A	Out - B									
Channel 2 Output	Current, Frequency, Pulse and Status								+ Active	Common -							
										Common +	- Passive						
Channels 3 and 4 Input/output	Outputs: Current, Frequency, Pulse and status Inputs: Digital											+ Active	Common -		+ Active	Common -	
													Common +	- Passive		Common +	- Passive
Channels 3 and 4 Relay	Status output											NC			NC		
													NO			NO	

Figure 5-3 Termination/configuration overview

5.2.2.3 Connecting the Current HART, CH1

Note

4 to 20 mA output

It is not required to use shielded cables for the pure 4 to 20 mA current output.

Note

HART communication

It is recommended by the FieldComm Group (FCG) to use shielded cables for the HART communication.

Note

Passive channels only

Channel 1 power supply must be separated from that for channels 2 to 4.

Signal return (or common) can be joined.

1. Remove cap and ferrule from cable gland and slide onto cable.
2. Push cable through open gland and cable path.
3. Restore ferrule and tighten cap to lightly hold cable in place.
4. Signal cable screen is folded back over outer sheath and grounded beneath cable clamp.

5. Connect wires to terminals using wiring tool, field mount transmitter

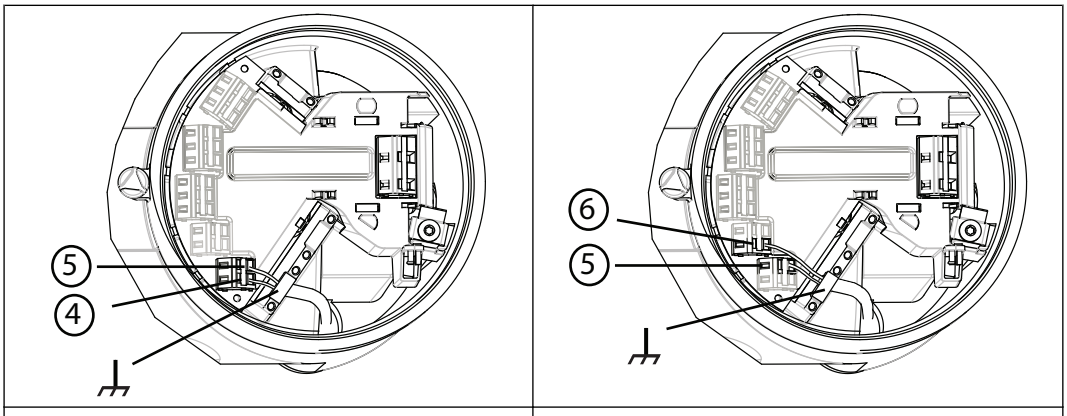

Active current output		Passive current output	
⑤	C	⑥	Cp-
④	Ca+	⑤	C
⏚ Functional Earth		⏚ Functional Earth	

Active current output	Passive current output
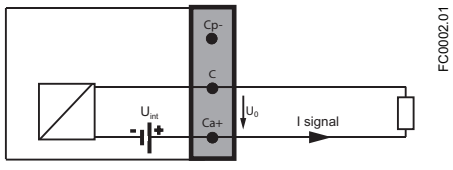	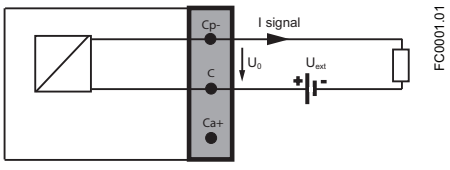

6. Connect wires to terminals, wall mount transmitter.

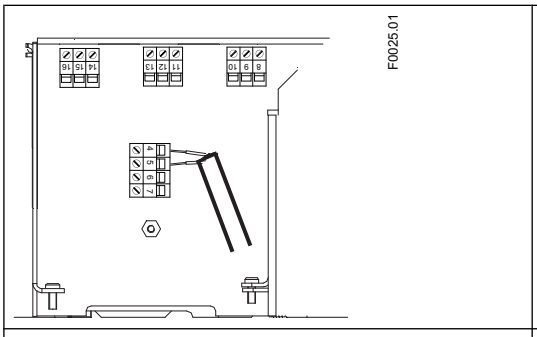

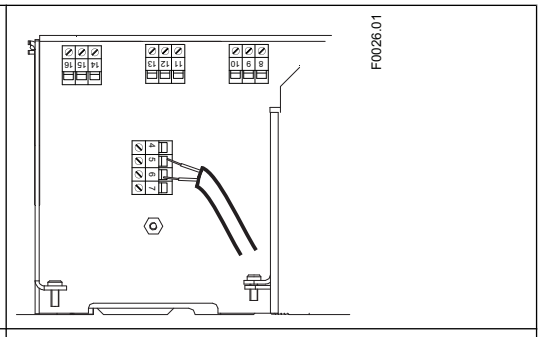

Active current output		Passive current output	
5	Ca+	6	Cp-
4	C	5	C

7. Tighten cable gland.

Note

For Ex versions active or passive current output is preselected at ordering and cannot be changed.

Non-Ex versions can be connected as either active or passive.

Note

Load

Signal output: < 500 Ω at 14 to 24 VDC (active), 14 to 30 VDC (passive)

Relay output: 30 VAC/VDC, 100 mA

Passive signal input: 15 to 30 VDC, 2 to 15 mA

Table 5-1 HW polling address

Load [Ω]	Voltage (active Ex) [V]	Voltage (active non Ex) [V]	24 V DC Voltage supply (passive) [V] Ex and Non Ex
			Measurered
100	3	3	17.7
200	5.9	5.9	19.6
500	11.4	14.9	21.0
1000	14.8	19.2	21.6
2000	17.4	20.1	21.9
5000	19.4	20.4	22.2
10000	20.3	21	22.3
20000	20	20.4	22.4
50000	20.4	20.6	22.5
100000	20.6	20.7	22.6

5.2.2.4 Connecting the Modbus (CH1)

1. Remove cap and ferrule from cable gland and slide onto cable.
2. Push cable through open gland and cable path.
3. Restore ferrule and tighten cap to lightly hold cable in place.
4. Signal cable screen is folded back over outer sheath and grounded beneath cable clamp.
5. Connect wires to terminals using wiring tool, field mount transmitter

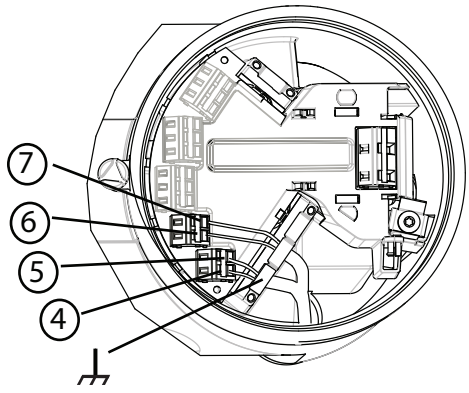

Modbus	
④	In + (B)
⑤	In - (A)
⑥	Out + (B)
⑦	Out - (A)
⏚	Functional Earth

6. Connect wires to terminals using wiring tool, wall mount transmitter.

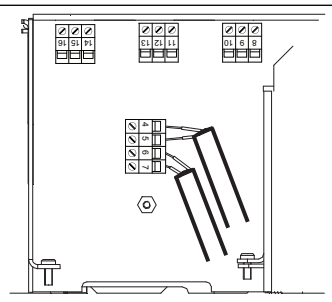

Modbus	
④	In + (B)
⑤	In - (A)
⑥	Out + (B)
⑦	Out - (A)

7. Tighten cable gland.

5.2.2.5 Connecting the Profibus (CH1)

⚠ WARNING
Passive channels only Channel 1 power supply must be separated from that for channels 2 to 4. Signal return (or common) can be joined.

1. Remove cap and ferrule from cable gland and slide onto cable.
2. Push cable through open gland and cable path.
3. Restore ferrule and tighten cap to lightly hold cable in place.
4. Signal cable screen is folded back over outer sheath and grounded beneath cable clamp.
5. Connect wires to terminals using wiring tool, field mount transmitter

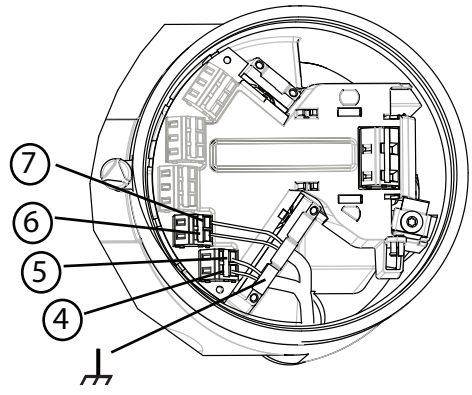

PROFIBUS DP/PA	
④	In + (B)
⑤	In - (A)
⑥	Out + (B)
⑦	Out - (A)
⏚ Functional Earth	

6. Connect wires to terminals using wiring tool, wall mount transmitter.

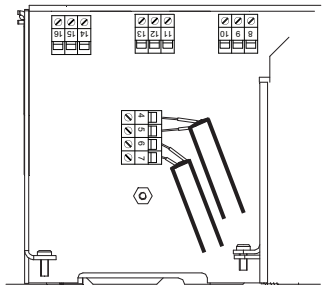	
PROFIBUS DP/PA	
④	In + (B)
⑤	In - (A)
⑥	Out + (B)
⑦	Out - (A)

7. Tighten cable gland.

5.2.2.6 Connecting channels 2 to 4

Channel 2 is for output only and channels 3 to 4 can be connected as either inputs/outputs or relays, see Input/output configuration (Page 76)

Connect wires

1. Remove cap and ferrule from cable gland and slide onto cable.
   Wall mount enclosure: Remove blind plug and fit cable gland.
2. Push cable through open gland and cable path.
3. Restore ferrule and tighten cap to lightly hold cable in place.
4. Fold signal cable screen back over outer sheath and ground beneath cable clamp.
   In case of shielded cables, use metal cable glands for proper connection.
5. Connect wires to terminals using screwdriver.
6. Tighten cable gland.

The numbers in the graphics below refer to table Figure 5-3 Termination/configuration overview (Page 69)

If connected as input or output - Field mount

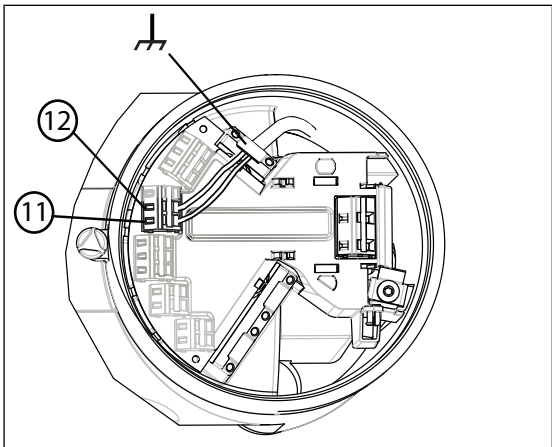		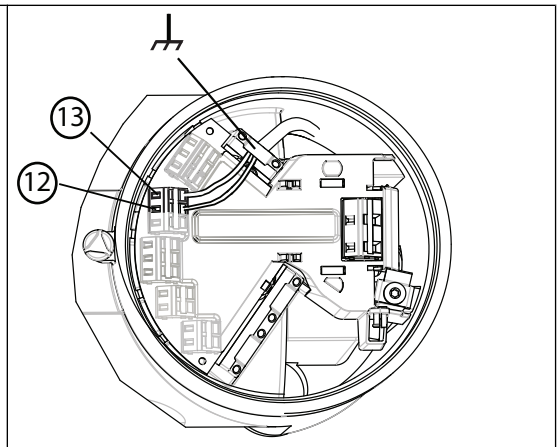	
Active configuration		Passive configuration	
⑫	IO[3] (common)	⑬	IO[3]- (passive)
⑪	IO[3]+ (active)	⑫	IO[3] (common)
⏚ Functional Earth		⏚ Functional Earth	

Table 5-2 If connected as input or output - Wall mount

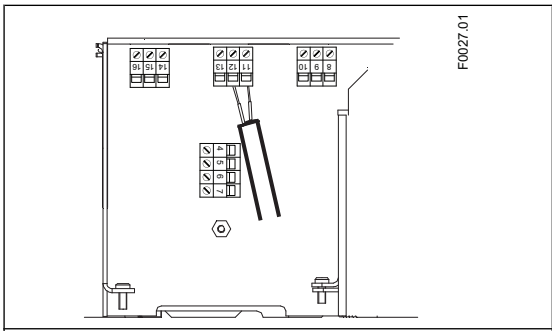		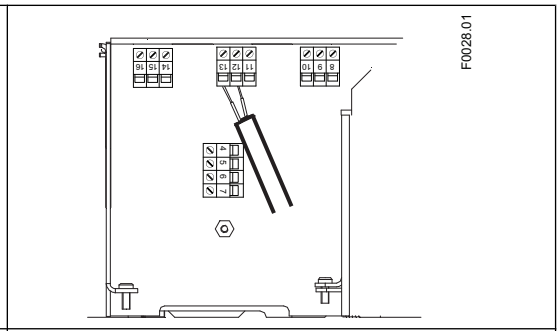	
Active configuration		Passive configuration	
⑫	IO[3] (common)	⑬	IO[3]- (passive)
⑪	IO[3]+ (active)	⑫	IO[3] (common)

Termination example for channel 3

If connected as relay (channels 3 and 4 only)

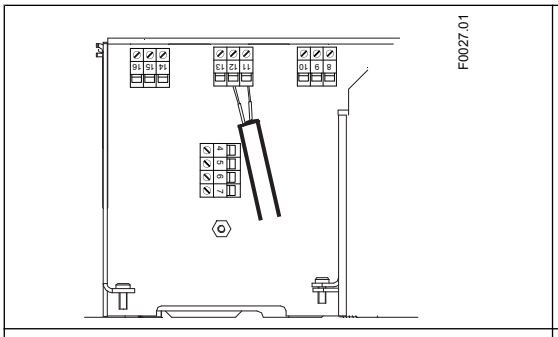		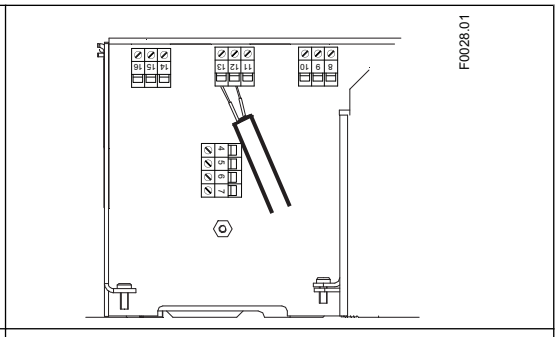	
Normally closed contact (NC)		Normally open contact (NO)	
⑫	NC	⑬	NO
⑪	NC	⑫	NO

Termination example for channel 3 - relay connection

5.2.2.7 Input/output configuration

All pressure values are handled as absolute pressure. If connected pressure transmitters measure the pressure in gauge pressure, then please convert to absolute pressure by using the scaling functionality of the flow transmitters current input channel.

Configuration	Software configuration	Channel 2	Channel 3	Channel 4	
Output Active	Current output Frequency output Pulse output Digital output • Alarm class • Alarm item • NAMUR status signals	X	X	X	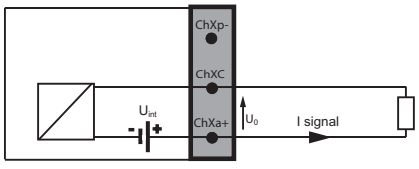 Active
Output Passive	Current output Frequency output Pulse output Digital output • Alarm class • Alarm item • NAMUR status signals	X	X	X	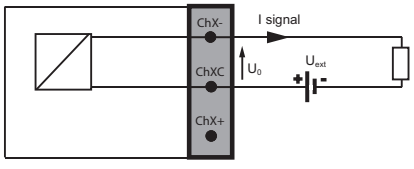 Passive

Configuration	Software configuration	Channel 2	Channel 3	Channel 4	
Input Active	Digital input • Reset totalizer 1 • Reset totalizer 2 • Reset totalizer 3 • Reset all totalizers • Force outputs • Freeze process values • Zero adjust		X	X	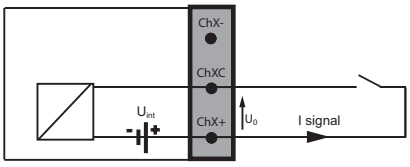 Active
Input Passive	Digital input • Reset totalizer 1 • Reset totalizer 2 • Reset totalizer 3 • Reset all totalizers • Force outputs • Freeze process values • Zero adjust		X	X	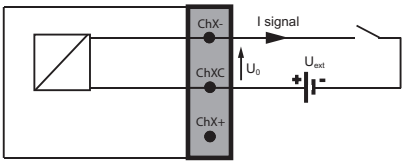 Passive
Relay output Normally open	Alarm class Alarm item NAMUR status signals		X	X	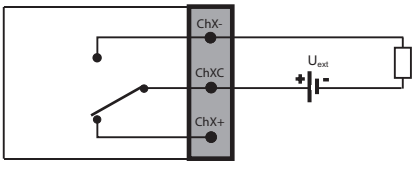 Normally open
Relay output Normally closed	Alarm class Alarm item NAMUR status signals		X	X	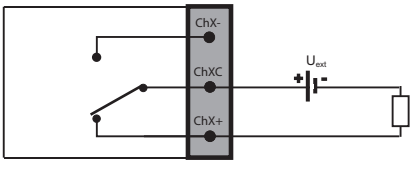 Normally closed

5.2.2.8 Connecting the power supply - Field mount

1. Flip open power supply terminal protection cover.
2. Remove cap and ferrule from cable gland and slide onto cable.

3. Push cable through open gland and cable path.

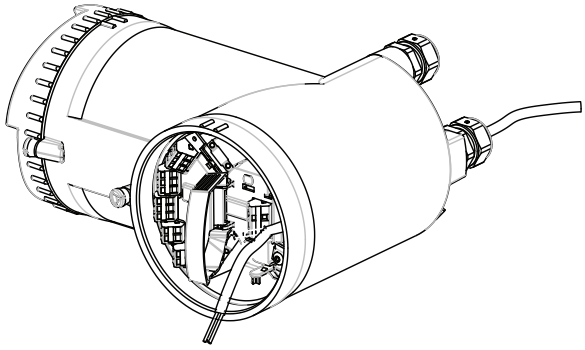

4. Restore ferrule and tighten cap to lightly hold cable in place.
5. Connect ground to terminal ⏚ and power to terminals L/+ and N/- using wiring tool in the manner shown below at right.

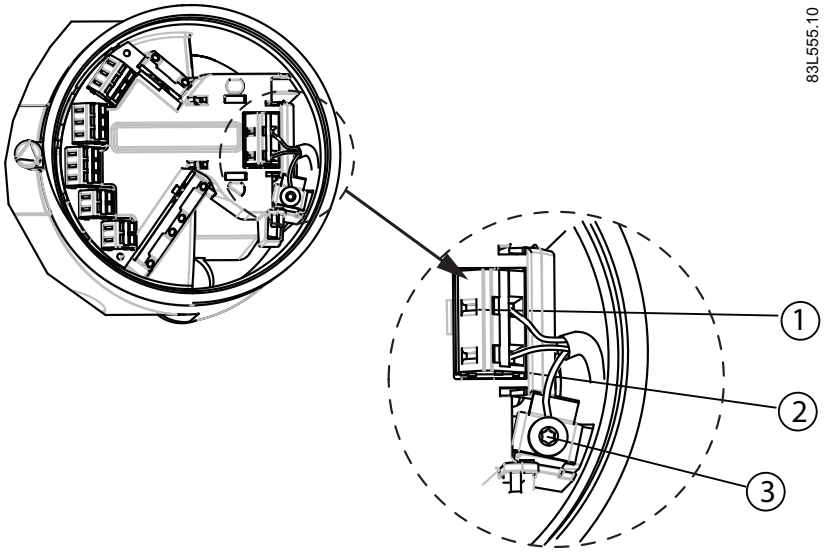

①	L/+
②	N/-
③	⏚ Protective Earth (PE)

AC connection	DC connection
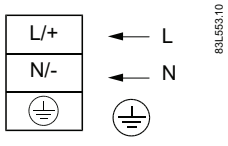 Power: 100 to 240 V AC, 47 to 63 Hz	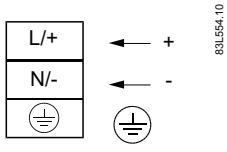 Power: 19.2 to 28.8 V DC

6. Close and latch power supply terminal protection cover.
7. Tighten cable gland.

5.2.2.9 Connecting the power supply - Wall mount

1. Open enclosure lid, unscrew power supply terminal protection cover screw, and remove protection cover.
2. Remove blind plug and fit cable gland.
3. Push cable through open gland and cable path

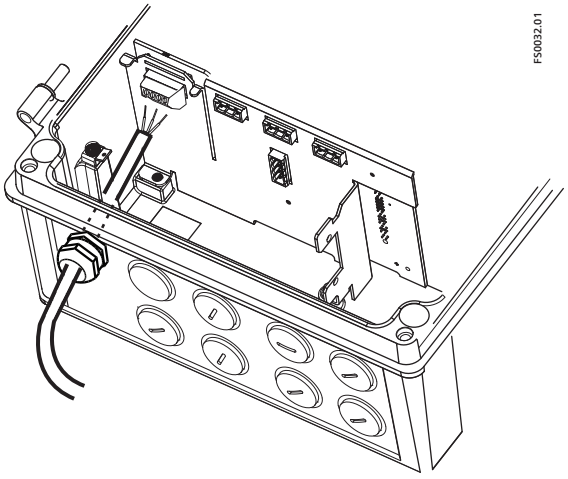

4. Restore ferrule and tighten cap to lightly hold cable in place.

5. Connect ground to terminal ⏚ and power to terminals L/+ and N/- in the manner shown below at right using a screwdriver.

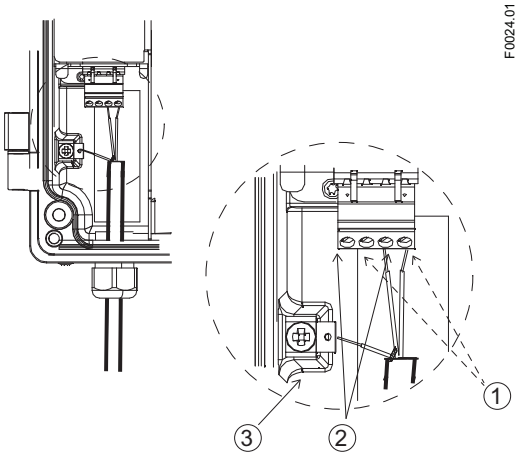

① L/+
② N/-
③ ⏚ Protective Earth (PE)

AC connection	DC connection
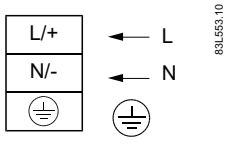 Power: 100 to 240 V AC, 47 to 63 Hz	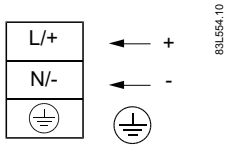 Power: 19.2 to 28.8 V DC

6. Mount power supply protection cover and fasten protection cover screw.
7. Tighten cable gland.

5.2.2.10 Finishing the transmitter connection

Connection check-up

1. Check individual wire installation by tugging firmly.
2. Firmly tighten cable glands and insert blanking plugs in unused cable entries.
3. Close lid.
4. Tighten the four spring screws.
5. Ensure that moisture does not penetrate to inside of electronics enclosure.

Your device is now ready for commissioning.

5.3 Nameplates for hazardous area installations

5.3.1 Device identification

Each part of the FC330 Coriolis flowmeter has three nameplate types showing the following information:

- product identification
- product specifications
- certificates and approvals

Note

Identification

Identify your device by comparing your ordering data with the information on the product and specification nameplates.

With compact versions, the transmitter and sensor product identifications are both given as 'Coriolis flowmeter SITRANS FC330'.

With remote versions, the transmitter is identified as 'Coriolis transmitter SITRANS FCT030' and the sensor as 'Coriolis sensor SITRANS FCS300'.

FCT030 transmitter identification nameplate

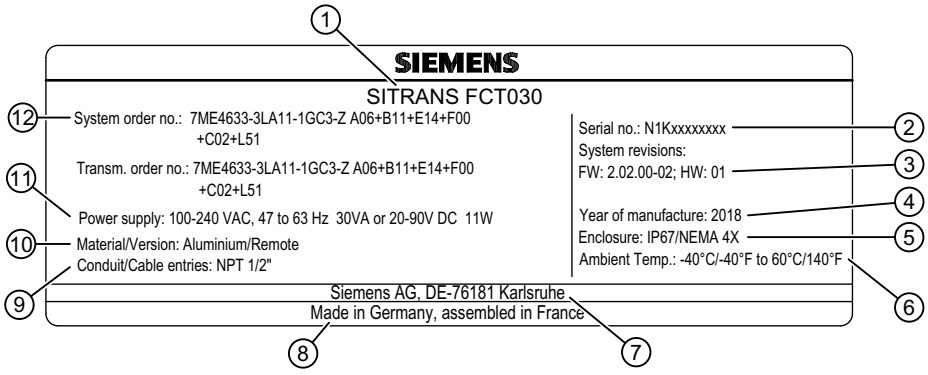

①	Product name	Transmitter product name
②	Serial no.	Transmitter serial number
③	System revisions	System revision numbers; firmware (FW) and hardware (HW)
④	Year of Manufacture	Manufacturing year More detailed manufacturing date information is given in the serial number (see sensor identification nameplate above)
⑤	Enclosure IP	Degree of protection
⑥	Ambient temp.	Ambient temperature
⑦	Manufacturer	Manufacturer name and location
⑧	Country	Manufacturing country
⑨	Conduit / cable entries	Type of conduit / cable entries
⑩	Material	Transmitter housing material and style (compact/remote)
⑪	Power Supply	Power supply
⑫	System order no.	Device-specific system order number (transmitter and sensor)

Figure 5-4 transmitter identification nameplate

FCS300 sensor identification nameplate

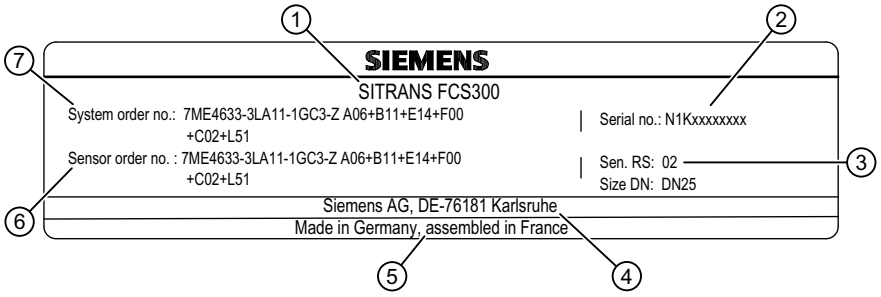

①	Product name	Sensor product name
②	Serial no.	Sensor serial number
③	Sen.	Mechanical sensor version number
④	Manufacturer	Manufacturer name and location
⑤	Country	Manufacturing country
⑥	Sensor order no.	Sensor replacement order number
⑦	System order no.	Flowmeter system order number (transmitter and sensor)

Figure 5-5 sensor identification nameplate

Flowmeter serial number construction

The flowmeter serial number is constructed as follows:

PPPYMDDxxxxxx

where
PPP = Production factory (Siemens Flow Instruments: FDK)
Y = Production year (for encryption, see below)
M = Production month (for encryption, see below)
DD = Production date (for encryption, see below)
xxxxxx = Sequential number

Encryption:

Calendar year (Y)	Code
1950, 1970, 1990, 2010	A
1951, 1971, 1991, 2011	B
1952, 1972, 1992, 2012	C
1953, 1973, 1993, 2013	D
1954, 1974, 1994, 2014	E
1955, 1975, 1995, 2015	F
1956, 1976, 1996, 2016	H (G)
1957, 1977, 1997, 2017	J
1958, 1978, 1998, 2018	K
1959, 1979, 1999, 2019	L
1960, 1980, 2000, 2020	M
1961, 1981, 2001, 2021	N

1962, 1982, 2002, 2022	P
1963, 1983, 2003, 2023	R
1964, 1984, 2004, 2024	S
1965, 1985, 2005, 2025	T
1966, 1986, 2006, 2026	U
1967, 1987, 2007, 2027	V
1968, 1988, 2008, 2028	W
1969, 1989, 2009, 2029	X
Month (M)	**Code**
January	1
February	2
March	3
April	4
May	5
June	6
July	7
August	8
September	9
October	O
November	N
December	D
Date (DD)	**Code**
Day 1 to 31	01 to 31 (corresponding to the actual date)

FCT030 transmitter specification nameplate

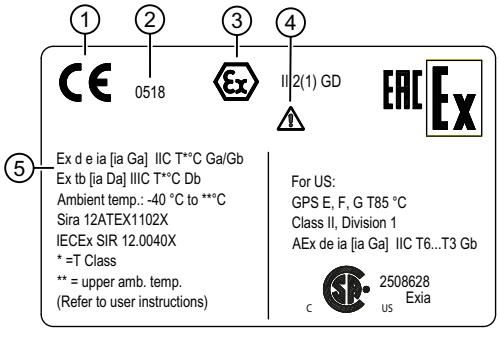

①	CE	CE mark
②	0518	ATEX Notified Body ID (SIRA Certification)
③	Ex	Ex mark
④	⚠	Consult the operating instructions
⑤	Ex approvals	Ex approval specifications for the transmitter (ATEX example; for details on all approvals)

Figure 5-6 transmitter specification nameplate

Note

Approval identifications

Approval certificates and notified body identifications are available for download at www.siemens.com.

FCS300 sensor specification nameplate

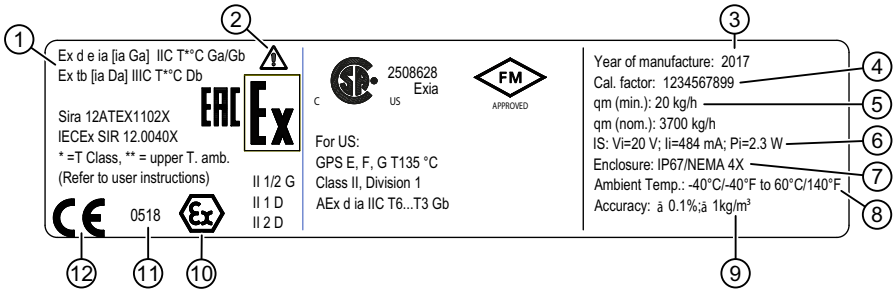

①	Ex approvals	Ex approval specifications for the sensor
②	⚠	Consult the operating instructions
③	Year of Manufacture	Manufacturing year More detailed manufacturing date information is given in the serial number found on the identification nameplate
④	Cal. Factor	Calibration factor
⑤	Qm (min) Qm (nom)	Minimum and nominal massflows with water at 20 °C (68 °F)
	MAWP	Maximum allowable working pressures at 20 °C (68 °F) and 200 °C (392 °F) (max. temperature (TS))
⑥	Power Supply	Power supply (not given on the compact variant because it is internal)
⑦	Wetted material	Measuring tube/process connection materials
⑧	Ambient Temp.	Ambient temperature range
⑨	Accuracy	Massflow, density calibration accuracy
⑩	Ex	Ex mark
⑪	0518	Notified Body ID (ATEX example)
⑫	CE	CE mark

Figure 5-7 sensor specification nameplate

FCT030 transmitter approval nameplate

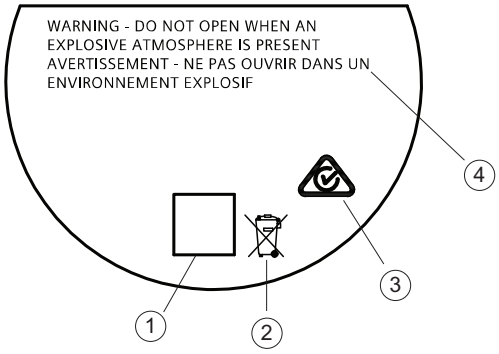

①	QR code	Product-specific QR code
②		WEEE symbol
③	C✓	C-tick logo
④	FORCE OIML	Custody Transfer evaluation certificate number

FCS300 sensor approval nameplate

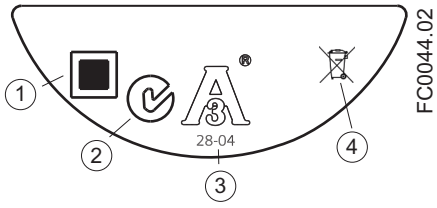

①	QR code	Product-specific QR code
②	C✓	C-tick logo
③	3A	3A logo
④		WEEE symbol

Note

Logos and warnings

Logos and warnings are only shown on the product where applicable. The combination shown in the example above is relevant for a hygienic sensor installed in hazardous area in Canada.

The Australian C-tick mark is mandatory on all products.

Other label

Figure 5-8 How to install

The QR code provides direct internet connection to

- The product support portal, which includes access to the "How to Install" YouTube video. (This example provides that function.)
- Product and production-specific documentation maintained in the production database.

5.4 Instructions specific to hazardous area installations

5.4.1 Wiring in hazardous areas

Hazardous area applications

Special requirements apply to the location and interconnection of sensor and transmitter. See Installation in hazardous areas (Page 23).

⚠ WARNING
Transmitter housing Before opening the terminal box check that: • No explosion hazard exists • All connection leads are potential free

Commissioning 6

In this chapter it is described how to commission the device via the local display using the Quick commissioning wizard.

6.1 Basic safety notes

DANGER

Toxic gases and liquids

Danger of poisoning when venting the device: if toxic process media are measured, toxic gases and liquids can be released.

- Before venting ensure that there are no toxic gases or liquids in the device, or take the appropriate safety measures.

WARNING

Improper commissioning in hazardous areas

Device failure or risk of explosion in hazardous areas.

- Do not commission the device until it has been mounted completely and connected in accordance with the information in Installing/mounting (Page 39).
- Before commissioning take the effect on other devices in the system into account.

WARNING

Commissioning and operation with pending error

If an error message appears, correct operation in the process is no longer guaranteed.

- Check the gravity of the error.
- Correct the error.
- If the error still exists:
  - Take the device out of operation.
  - Prevent renewed commissioning.

WARNING

Hot surfaces

Risk of burns resulting from hot surfaces.

- Take corresponding protective measures, for example by wearing protective gloves.

Note

Hot surface is only an issue for media or ambient temperature above 50 °C.

WARNING

Hazardous contact voltage

Risk of injury through hazardous contact voltage when the device is open or not completely closed.

The degree of protection specified on the nameplate or in Technical data (Page 191) is no longer guaranteed if the device is open or not properly closed.

- Make sure that the device is securely closed.

WARNING

Loss of explosion protection

Risk of explosion in hazardous areas if the device is open or not properly closed.

- Close the device as described in Installing/mounting (Page 39).

WARNING

Opening device in energized state

Risk of explosion in hazardous areas

- Only open the device in a de-energized state.
- Check prior to commissioning that the cover, cover locks, and cable inlets are assembled in accordance with the directives.

Exception: Devices having the type of protection "Intrinsic safety Ex i" may also be opened in energized state in hazardous areas.

WARNING

Hazardous gases in the enclosure

Risk of explosion.

Hazardous gases are gases that can explode and have a gas concentration of more than 25% of the lower explosion limit (LEL). Under normal ambient conditions the LEL is the risk threshold when handling these gases. However, special operating conditions can lower the potential risk from these gases under the LEL. A value of 25% of the LEL is regarded as definitely safe.

- Do not introduce combustible or hazardous gases into a restricted-breathing enclosure (type of protection Ex nR).

WARNING

Dust in pressurized enclosure "Type of protection Ex p"

An explosive dust atmosphere inside an enclosure can result in an explosion.

- In Zones 21 and 22: Remove the dust layers manually from the enclosure.
- Cleaning by pre-purging is not permitted.

CAUTION

Loss of type of protection

Damage to device if the enclosure is open or not properly closed. The type of protection specified on the nameplate or in Technical data (Page 191) is no longer guaranteed.

- Make sure that the device is securely closed.

6.1.1 Warnings

CAUTION

Sensor and transmitter ordered separately

If the sensor and the transmitter are ordered separately, a "Set To Default" routine must be performed. This can be done via SIMATIC PDM or via menu item 3.3.3 in HMI.

WARNING

Dangerous high voltage

Certain parts inside the device carry dangerous high voltage. The housing must be closed and grounded before switching on the device.

WARNING

Improper handling

The sensor connected to this device can be operated with high pressure and corrosive media. Therefore improper handling of the device can lead to serious injuries and/or considerable material damage.

6.2 General requirements

Before commissioning it must be checked that:

- The device has been installed and connected in accordance with the guidelines provided in Installing/mounting (Page 39) and Connecting (Page 59).
- Device installed in hazardous areas meets the requirements described in Use in hazardous areas (Page 20).

6.3 Local commissioning

6.3.1 Local display

The device is commissioned/operated with the touch keypad on the local display.

The elements are actuated by touching the glass panel on the appropriate key. Pressing harder will not activate the key, but using a thumb instead of a finger tip will help. The text display above the operating elements gives a menu-guided operation of the individual device function/ parameters. Successful operation of the key is confirmed by a small green LED at the right of the display.

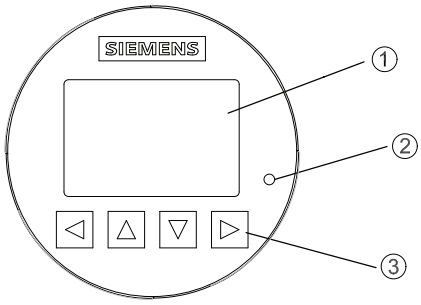

① Full graphical display
② LED (for indication of key operation)
③ Touch keypad

Figure 6-1 Local display

Note

(Re-)calibration of the keypad

When the lid is closed, all keys are (re-)calibrated (< 5 seconds). During (re-)calibration the LED is on and the keys cannot be operated.

If one of the keys is pressed for more than 10 seconds, the (re-)calibration of this key begins which has a duration of less than 10 seconds. Release the key for further operation.

Note

HMI timeout

If no key is pressed for 10 minutes, the display switches to show operation view. If Backlight is set to Automatic, display backlight goes off automatically 30 seconds after the last keypress.

Note

Operation does not require opening of the device. This means that the high degree of protection of IP67 and safety in hazardous areas are guaranteed at all times.

6.3.2 Initial startup

The first time the device is powered up, you will be prompted to set the language. The device always starts up showing "Language" in English. When the language has been set, you will be prompted to set the date and time.

Before using the flow meter for the first time, essential parameters should be considered. After confirming/changing date and time you can choose to accept the default values or start the Quick commissioning wizard.

You will be asked if you want to start the "Quick commissioning" wizard. If you choose "Yes" (recommended), the "Quick commissioning" wizard will start. If you choose "No", you accept the default values of the device, and the next HMI view will be the operation view 1.

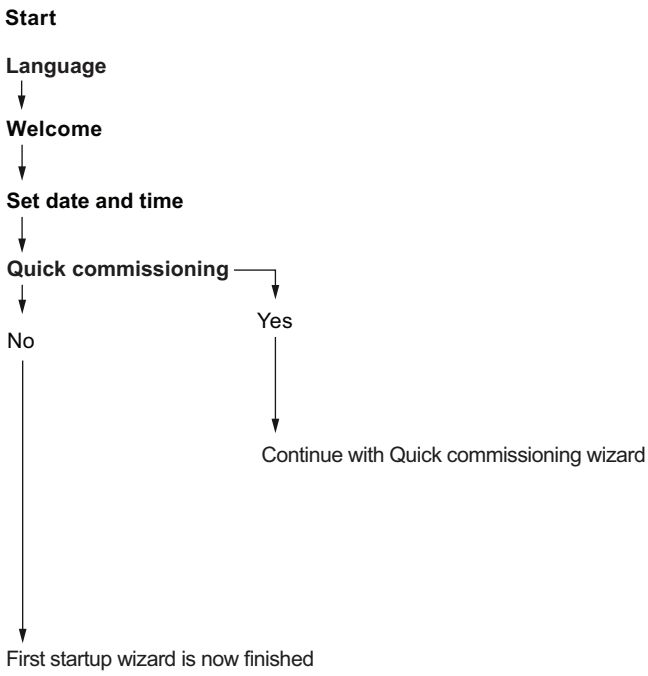

Text	Options/description
Language	Set the language: English, Deutsch
Welcome	Information about the "Quick commissioning" wizard
Set date and time	The set date and time (real time clock) is used for all time stamps of logged information.
Quick commissioning	The "Quick commissioning" wizard comprises the most important parameters/menus for quick configuration of the flowmeter.

6.3.3 Commissioning via HMI

6.3.3.1 Wizard introduction

In this chapter it is described how to commission the device via the local display (HMI) using the Quick Commissioning wizard.

For further information on how to navigate the wizards, refer to Wizards (Page 99).

In the wizard graphics below, the HMI view numbers are stated to the left.

The first view in each wizard (About - view 1) is a description of what settings/actions can be performed using the specific wizard.

The last view in each wizard (Finished) shows that the last step of the wizard was completed.

Any parameter changes confirmed with ▷ are saved immediately.

At any time in any wizard selecting Exit will bring you back to the main wizard menu without discarding changes.

The first time the device is powered up, you will be prompted to set the language. The device always starts up showing Language in English. When the language has been set, you will be prompted to set the date and time.

After confirming/changing the date and time you will be asked if you want to start the Quick Commissioning wizard. If you choose Yes (recommended), the Quick Commissioning wizard will start. If you choose No, you accept the default values of the device, and the next HMI view will be the operation view 1.

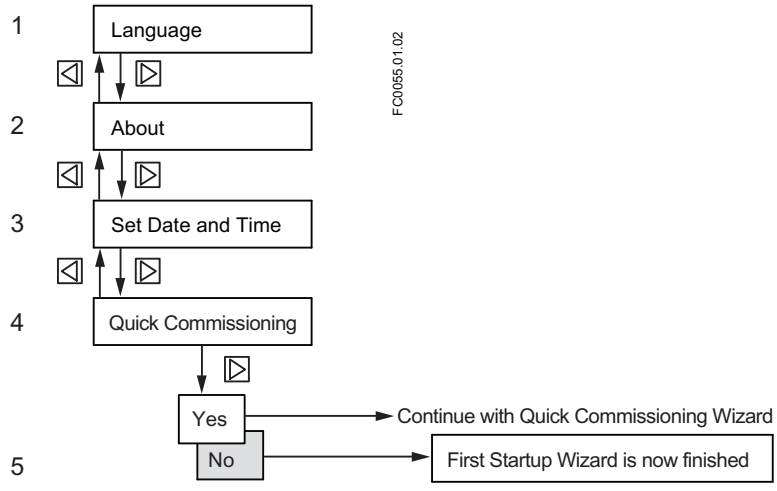

View no.	Text	Options/description
1	Language	Set the language: English, Deutsch, Français, Italiano, Español, Português, РУССКИЙ, 汉语, Polski, Dansk, Svenska, Suomeksi
2	"About"	Information about the Quick Commissioning wizard
3	Set Date and Time	The set date and time (real time clock) is used for all time stamps of logged information
4	Quick Commissioning	The Quick Commissioning wizard comprises the most important parameters/menus for quick configuration of the flowmeter

6.3.3.2 Quick Commissioning wizard (menu item 1.1)

The Quick Commissioning wizard will guide you through configuration of parameters essential for your application. You configure parameters essential for your application by selecting the configuration path and subwizards appropriate for your application.

See also

Process Values wizard (menu item 1.3) (Page 101)

Gas Application wizard (menu item 1.5) (Page 106)

Pulsating Flow wizard (menu item 1.6) (Page 107)

Dosing Application wizard (menu item 1.7) (Page 108)

Zero Point Adjustment wizard (menu item 1.2) (Page 98)

Inputs/Outputs wizard (menu item 1.4) (Page 102)

6.3.3.3 Zero point adjustment

The flowmeter system is optimized through a zero point adjustment which is performed via the Zero Point Adjustment wizard.

Performing a zero point adjustment

⚠ CAUTION
Gas application
Zero point adjusting the device is only recommended for liquid applications.

1. Flush out any gases and obtain stable temperature conditions by running flow at operational conditions (pressure and temperature) for minimum 30 minutes.

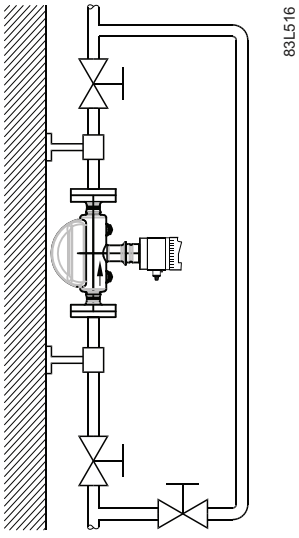

Figure 6-2 Best practice zero point adjustment with a by-pass line and two shut-off devices

2. Close the outlet shut-off valve while maintaining the system pressure. If bypass flow is necessary, open the bypass valve. If the pressure can be increased by 1 to 2 bars with stopped flow, this should be applied.
3. Wait 1 to 2 minutes, for the system to settle, and then perform zero adjustment. Waiting longer can change the temperature.

4. During the process a progress bar is visible in the HMI display.
5. At the end of the zero adjustment, the outcome is displayed as an offset and a standard deviation.

Note

If you get an error message after the zero point adjustment, refer to Zero point adjustment (Page 139).

6.3.3.4 Zero Point Adjustment wizard (menu item 1.2)

The flowmeter system is optimized through an automatic zero point adjustment. Before you start the zero point adjustment flush the pipe and keep it filled at an absolute flowrate of zero. Ensure that the sensor has the same temperature as the process media. Perform at operating pressure or at least 0.2 barg.

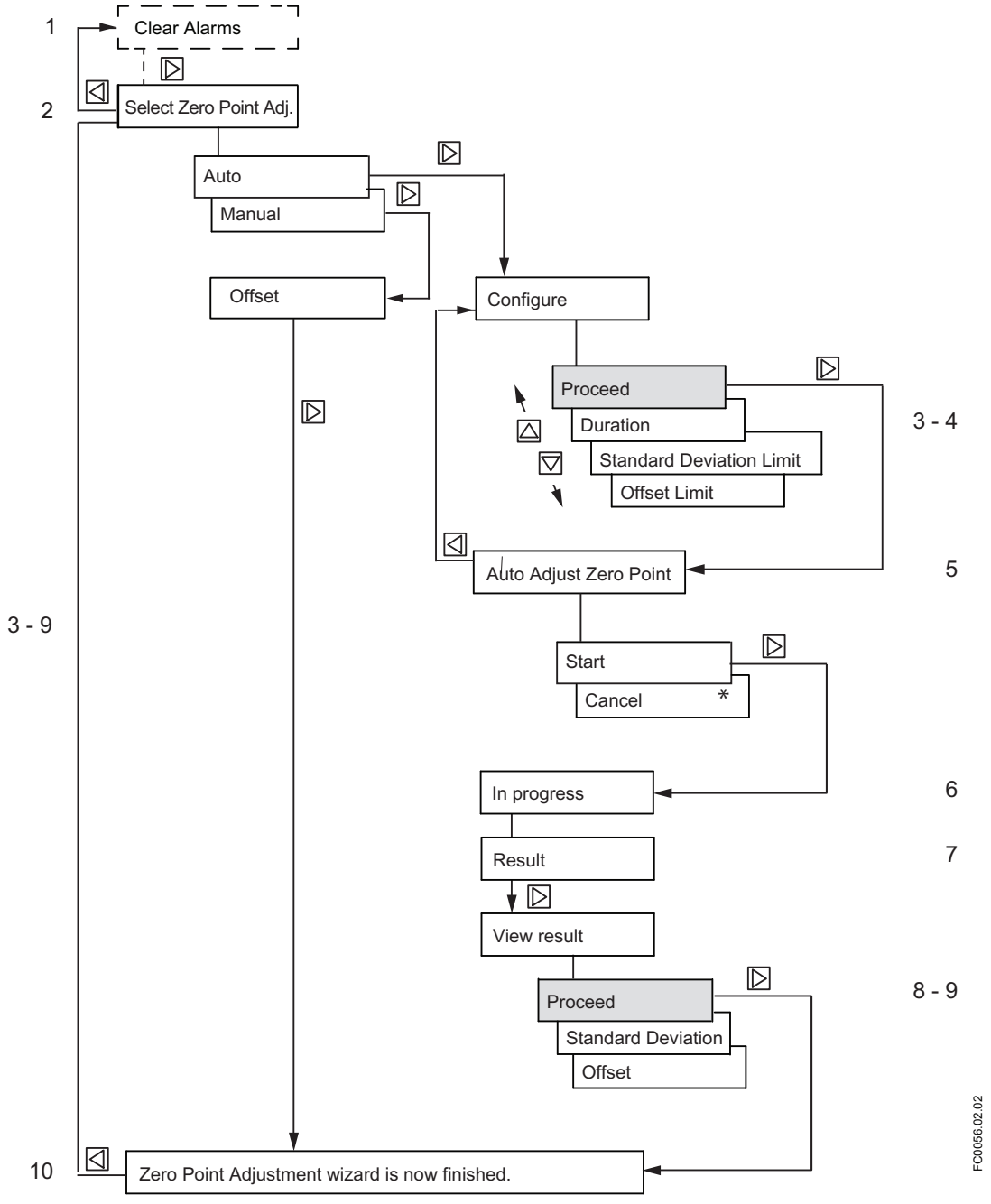

View no.	Text	Options/Description
1	Clear alarms	"Clear Alarms" and alarm list are only shown if alarms are present.

2	Select zero point adjustment type	Auto, Manual
3-4	Configure	Configure duration and limits
5	Auto Adjust Zero point	Cancel, Start (progress, result, standard deviation and offset)
6	In progress	The progress bar is shown
7	Result	Information on success or failure of zero point adjustment
8-9	View result	Standard Deviation and Offset values

*: Pressing Cancel will bypass the Zero Point Adjustment and go to view 10.

Note

View result

Standard Deviation and Offset values are only updated if the zero point adjustment was completed successfully. Otherwise the previous values are used.

6.3.3.5 Wizards

The HMI wizard graphics show an overview of each HMI wizard and of the keys used to navigate through the wizards. In the upper left corner of each view the wizard name (for example "Process Values") and the step name (for example "Unit") of the wizard is shown. In the upper right corner the view number (for example 5 of 18 in the Process Values wizard) is shown.

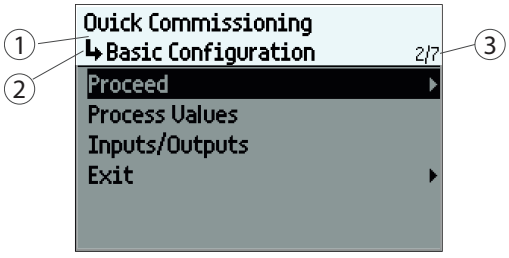

① Wizard name

② Step name / Parameter name

③ View number / Total views in wizard

The purpose of the HMI wizards is to guide you through a quick set-up of various parameters.

The following HMI wizards are available:

- Quick Commissioning
- Process Values
- Zero Point Adjustment
- Inputs/Outputs
- Gas Application
- Pulsating Flow
- Dosing Application

Use the △ and ▽ keys to highlight the desired HMI wizard and press right key to enter the wizard. The first view shows a short description of which settings can be done.

Key operation

Basic navigation in the HMI wizards is shown in the graphics.

To change settings, use the △ and ▽ keys to highlight wanted setting, then press ▷ key to select. Confirm selection by pressing ▷ key again.

When you reach the end of the wizard, e.g. "Process Values wizard is now finished", press ▷ key to go back to wizard list.

Process Values wizard (menu item 1.3)

The Process Values wizard will guide you through setup of process values for your application. The prioritizing of the process values automatically configures the measurement views on the display. The process value configured as 1st Process Value is set as first display view.

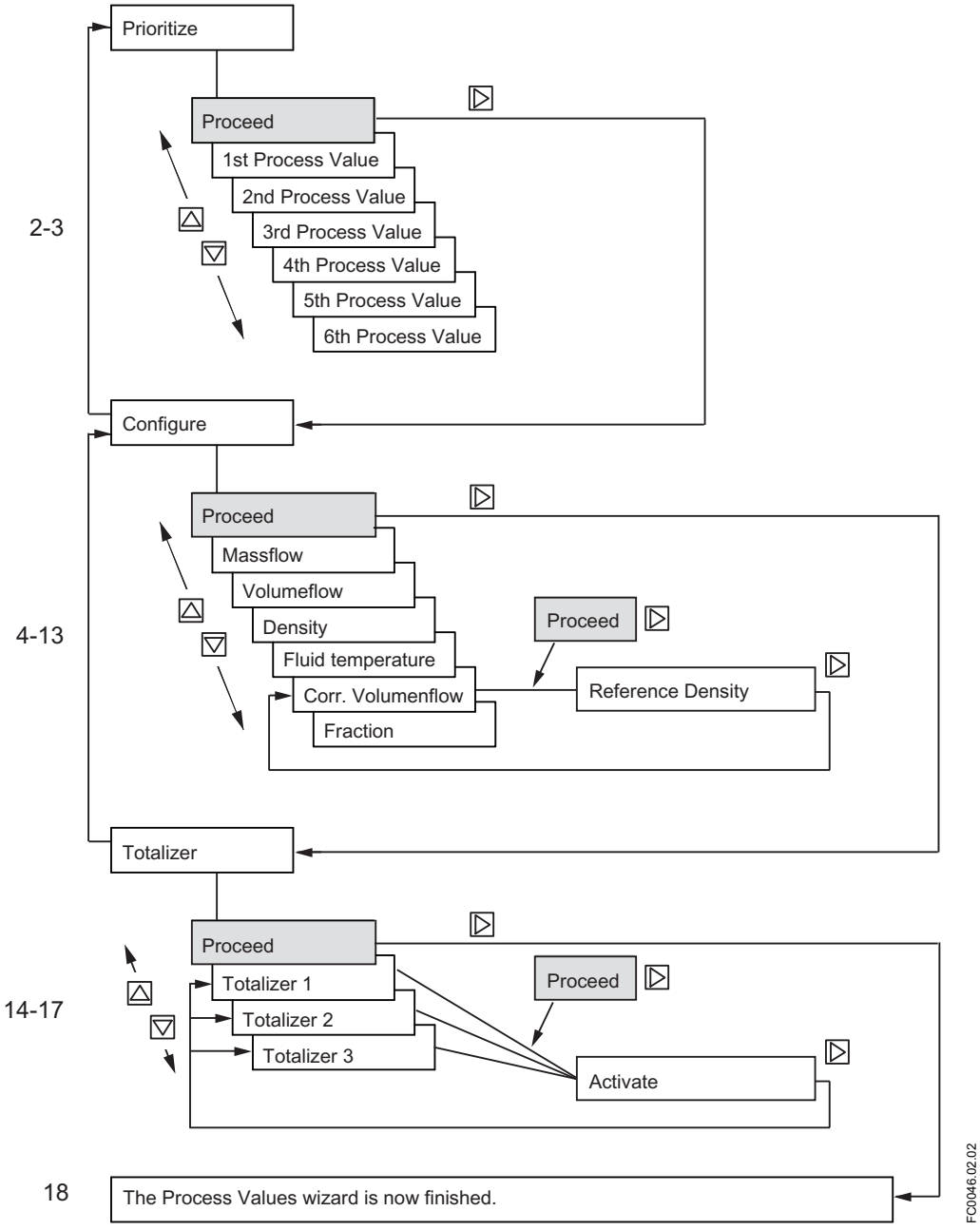

View no.	Text	Options/Description
2-3	Prioritize	Prioritize the process values

4-13	Configure	Configure the process values (unit, low flow cut-off, limits, and hysteresis)
14-17	Totalizer	Configure totalizers (if activated in operating view, it is possible to reset totalizer without password access)

Inputs/Outputs wizard (menu item 1.4)

The Input/Output wizard will guide you through setup of inputs and outputs on channels 1 to 4. The availability of channels 2 to 4 depends on the product configuration.

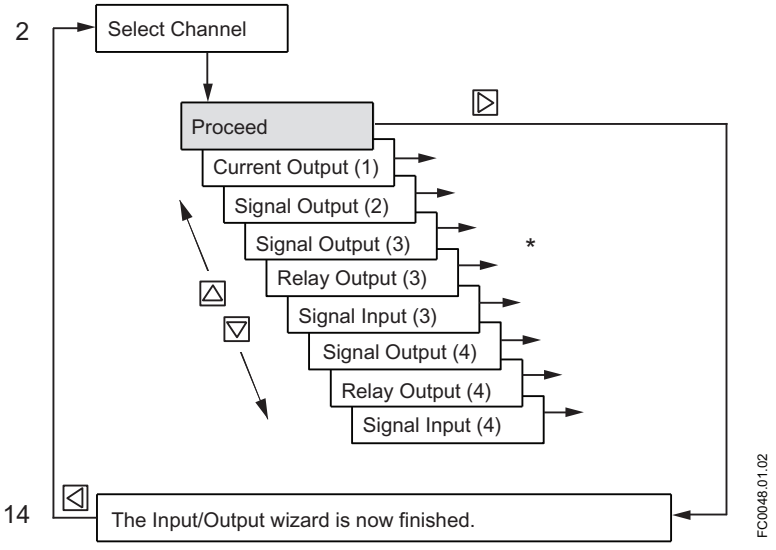

View no.	View text	Options/Description
2	Select Channel	Select the channel to be configured
3-14	Configuration	Configure selected channel (*: see appropriate graphic for configuration of the input/output function)

Channels 3 and 4 can only be assigned to one function (signal output, relay output or signal input).

Current output - channel 1

The Current Output on Channel 1 is a 4 to 20 mA output with Profibus, Profinet, HART, Modbus, X-bus communication. Channel 1 can be used in Functional Safety applications if ordered with SIL option.

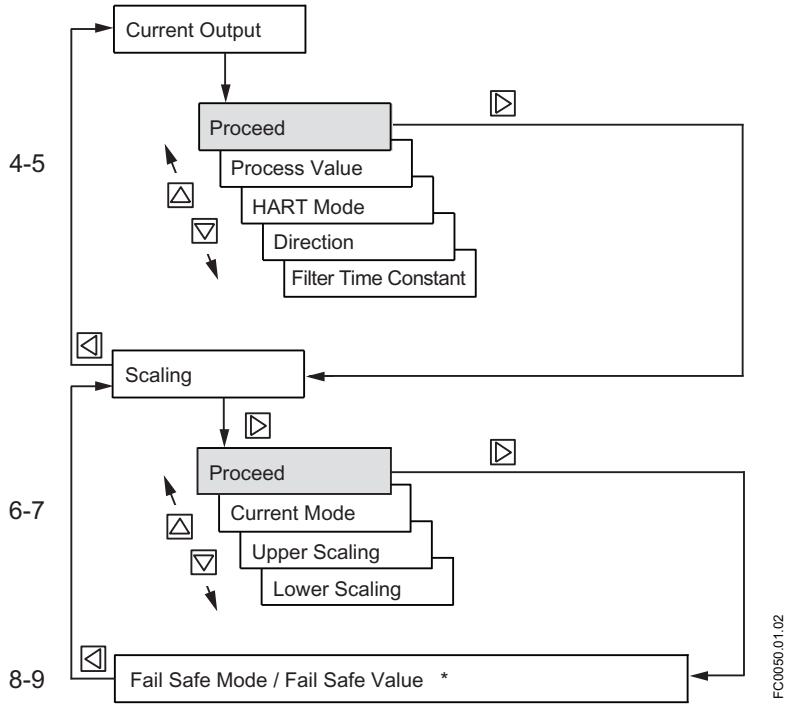

View no.	Text	Options/Description
4-5	Current Output	Configure current output basic settings
6-7	Scaling	Configure current mode, upper and lower scaling
8-9	Fail Safe Mode / Fail Safe Value	Select current output reaction in case of a fault

*: When pressing ▷ you will return to view "Select Channel".

Signal output - channels 2 to 4

The signal output can be configured to either current (0/4-20 mA), frequency, pulse, three-stage analog valve dosing control, discrete one or two-valve dosing control or alarm/status.

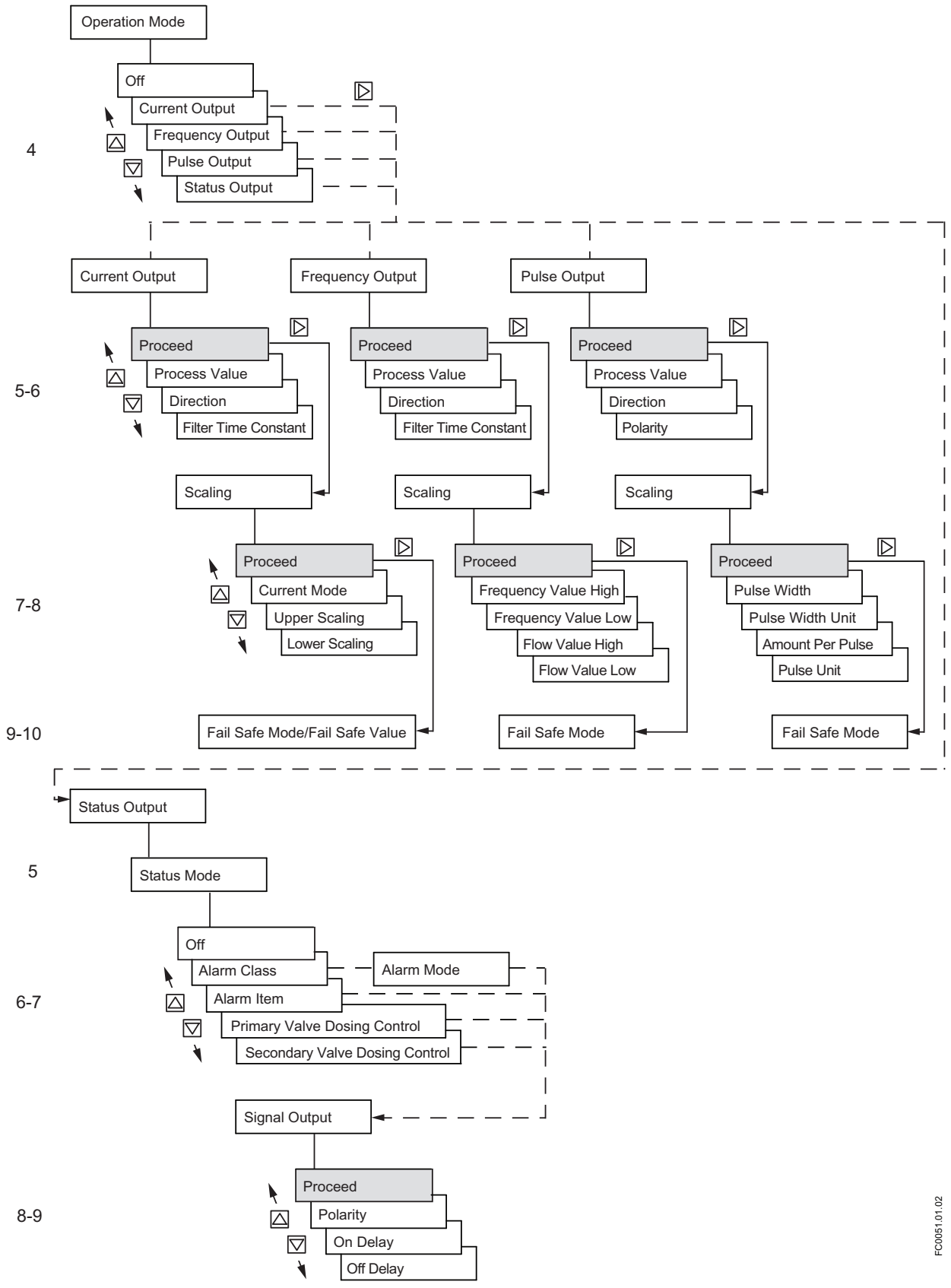
Operation Mode
Off
Current Output
Frequency Output
Pulse Output
Status Output
4
Current Output
Frequency Output
Pulse Output
Proceed
Process Value
Direction
Filter Time Constant
Polarity
5-6
Scaling
Proceed
Current Mode
Upper Scaling
Lower Scaling
Frequency Value High
Frequency Value Low
Flow Value High
Flow Value Low
Pulse Width
Pulse Width Unit
Amount Per Pulse
Pulse Unit
7-8
Fail Safe Mode/Fail Safe Value
Fail Safe Mode
9-10
Status Output
5
Status Mode
Off
Alarm Class
Alarm Mode
Alarm Item
Primary Valve Dosing Control
Secondary Valve Dosing Control
6-7
Signal Output
Proceed
Polarity
On Delay
Off Delay
8-9
FC0051.01.02

Current/Frequency/Pulse

View no.	Text	Options/Description
4	Operation Mode	Select the output functionality
5-6	Output function	Configure the output basic settings
7-8	Scaling	Configure the output scaling
9-10	Fail Safe Mode / Fail Safe Value	Select the signal output reaction in case of a fault

Status

View no.	Text	Options/Description
5	Status Mode	Select the digital output functionality
6-7	Configuration	Configure the alarm (only if Alarm Class or Individual alarms is selected)
8-9	Output polarity and delay	Set the output polarity and delay

Relay output - channels 3 to 4

The Relay Output can be configured to either discrete one or two-valve dosing control or alarm/status.

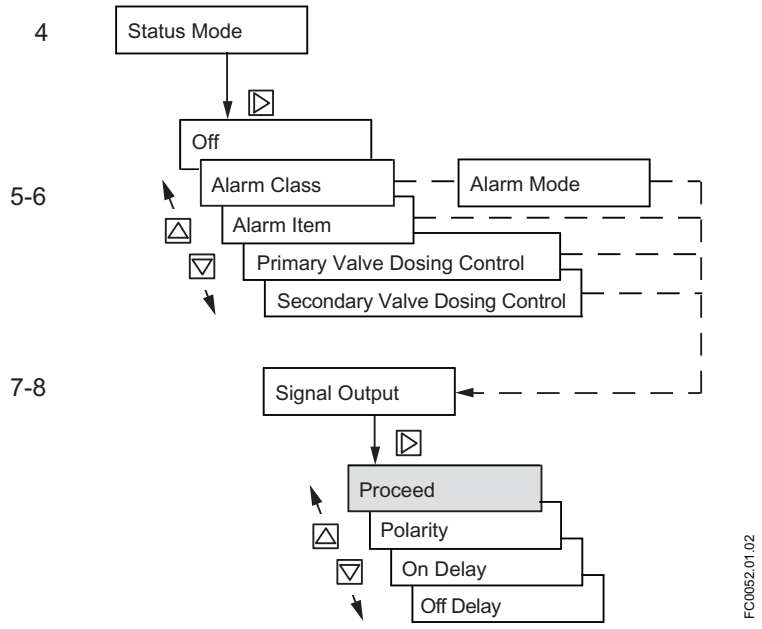

View no.	Text	Options/Description
4	Status Mode	Select the status output functionality
5-6	Configuration	Configure the alarm (only if Alarm Class or Individual alarms is selected)
7-8	Output polarity and delay	Set the output polarity and delay

Signal input - channels 3 to 4

The Signal Input can be configured to either Dosing control, Totalizer reset, Remote zero adjust or Force/Freeze output(s).

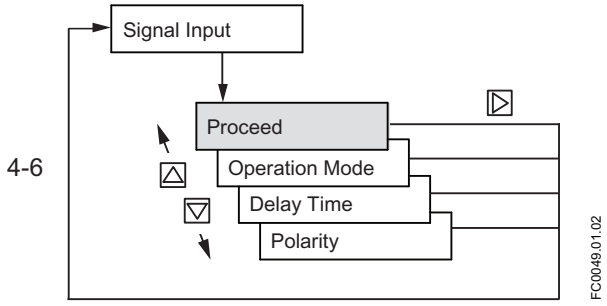

View no.	Text	Options/Description
4	Operation Mode	Select the signal input functionality
5	Delay Time	Set the signal input delay time
6	Polarity	Set the signal input polarity

Gas Application wizard (menu item 1.5)

The Gas Application wizard will guide you through configuration of essential parameters for measuring gas flow. As default Low Flow Cut-Off and Empty Tube Detection are disabled. Actual volume flow is difficult to use with low pressure; hence we recommend to use Corrected Volumeflow.

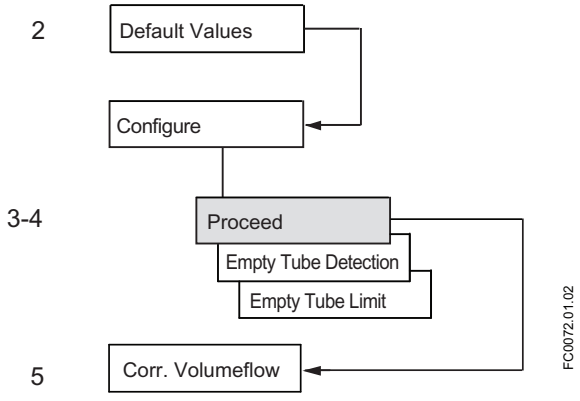

View no.	Text	Options/Description
2	Default Values	Select whether or not to use the default values
3-4	Configure	Configure empty tube detection and limit
5	Corr. Volumeflow	Configure settings for corrected volumeflow

Pulsating Flow wizard (menu item 1.6)

The Pulsating Flow wizard will guide you through configuration of essential parameters for applications with pulsating flow. As default the Totalizer will be set to Balanced, the Process Noise Damping is set to 4 and the Low Flow Cut-Off value will be raised.

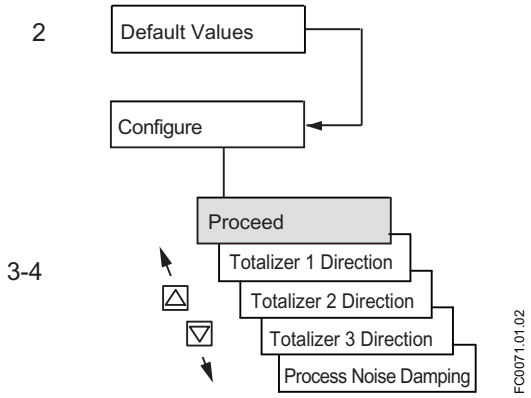

View no.	Text	Options/Description
2	Default Values	Select whether or not to use the default values
3-4	Configure	Configure totalizer direction

Dosing Application wizard (menu item 1.7)

The Dosing Application wizard will guide you through configuration of each recipe for dosing control including valve control (discrete/analog) and fault handling. The valve control is done using channels 2, 3 and 4.

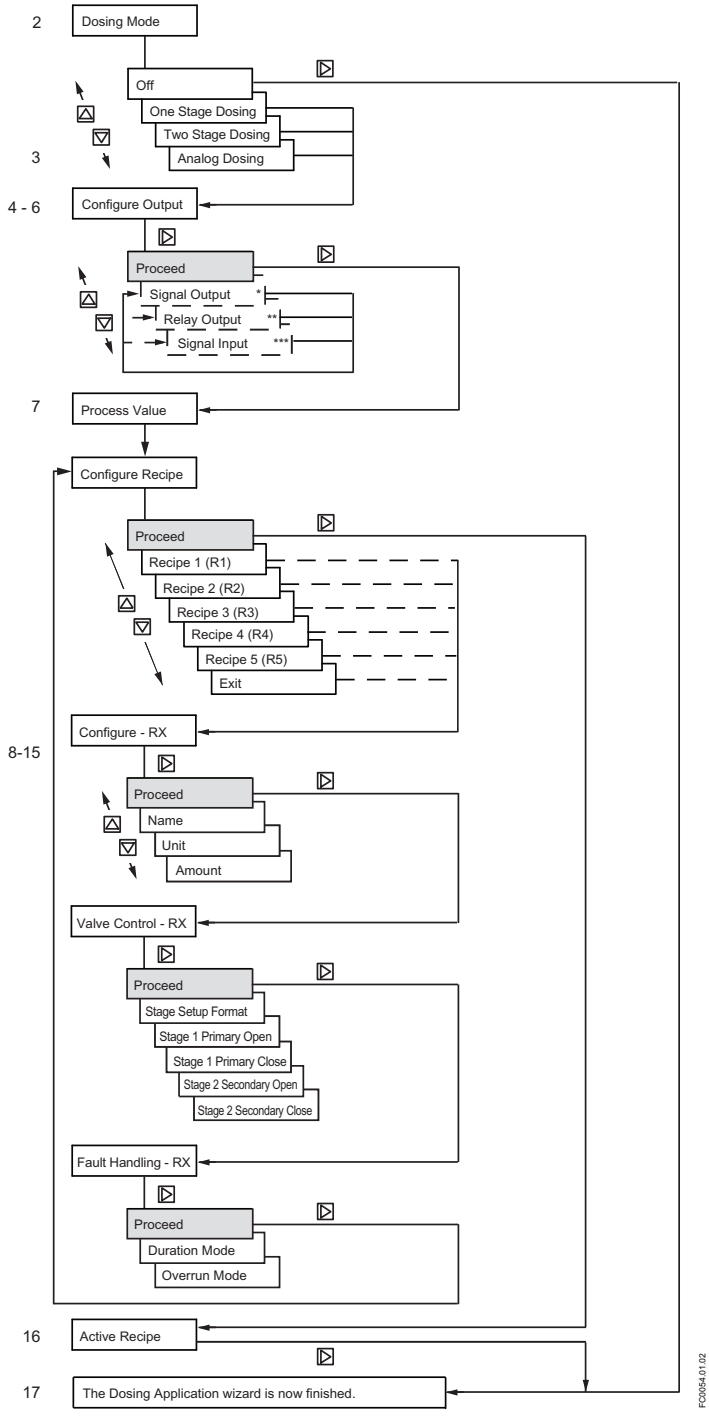

View no.	Text	Options/Description

2	Dosing Mode	Select the dosing mode to control the valve(s) on the output
3	Dosing options	Setup instructions for the selected dosing mode
4-6	Configure Output	Configure the output to control the valves
7	Process Value	Select the process value
8-15	Configure recipe	Configure the recipe (valve control and fault handling)
16	Active Recipe	Select a dosing recipe

*: Set Operation Mode to Status Mode and set Status Mode to control Primary Valve or Secondary Valve.

**: Set Status Mode to Primary Valve or Secondary Valve.

***: Set Operation Mode to Dosing Control.

For dosing setup, see Dosing (Page 154).

6.3.4 Power up

6.3.4.1 Power-up

Power up the device. Devices with local display show a screen for initial startup.

6.4 Remote commissioning

6.4.1 Programming

6.4.1.1 Commissioning with PDM

For commissioning with SIMATIC PDM, see separate function manual for MODBUS, HART or PROFIBUS.

Operating via SIMATIC PDM

SIMATIC PDM is a software package used to commission and maintain process devices.

See also

www.siemens.com/simatic-pdm (www.siemens.com/simatic-pdm)

6.4.1.2 Wizards

Functional safety

7

Operating FC330

8

A considerable amount of information regarding the operation and status of the flowmeter is available to the user via the local display (HMI) and SIMATIC PDM.

In this chapter you will find information on how to monitor and operate the device using the local display (HMI).

8.1 Operating instructions

8.1.1 Local display (HMI)

Operation via local user interface

The device is operated with the capacitive proximity keypad on the local user interface.

The elements are actuated by touching the glass panel above the appropriate key. The glass is 10 mm (3/8") thick. Pressing harder will not activate the key, but using a thumb instead of a finger tip will help. The text display above the operating elements gives a menu-guided operation of the individual device function/parameters. Successful operation of the key is confirmed by a small green LED at the right of the display.

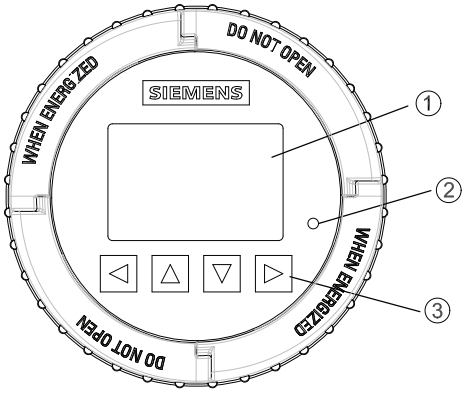

① Full graphical display

② LED (for indication of key operation)

③ Capitance proximity keypad

Figure 8-1 Local user interface

Note

Recalibration of the keypad

When the lid is mounted, all keys are recalibrated (approximately 40 seconds). During recalibration the LED is on and the keys cannot be operated.

If one of the keys is pressed for more than 10 seconds, this key is recalibrated (duration less than 10 seconds). Release the key for further operation.

Note

HMI timeout

If no key is pressed for 10 minutes, the display switches to show operation view.

Note

Operation does not require opening of the device. This means that the high degree of protection of IP67 and safety in hazardous areas are guaranteed at all times.

Note

Motor fuel dispensers

The Local User Interface is not suitable as an indication device for motor fuel dispensers.

Note

Display backlight

The display backlight goes off automatically 30 seconds after the last keypress.

8.1.1.1 Display view structure

There are three view types:

- **Operation view**
  The operator view shows up to six operation views (Page 120). The operation views are fully configurable to show different process values in different operation view types. Depending on the operation view type configuration the view is either measurement view or alarm view.
  - Measurement view: Displays the measurement values, see Operation view (Page 120).
  - Alarm view: Displays the active alarms in a list, see Operation view (Page 120).
  - Operating view: Enables the totalizer reset and the dosing control, see Operation view (Page 120).
  - Diagnostic view: Displays six configurable measurement/diagnostic values, see Operation view (Page 120).
- **Navigation view**
  The Navigation view (Page 127) shows the menus and parameters. The navigation view is used to navigate through the menus and parameters in the device.
- **Parameter view**
  The Parameter view (Page 129) can be entered from the navigation view. The parameter view is used to view and edit the parameters.

Navigating the operation view

Browse the operation views and menu items using the control buttons as follows:

Table 8-1 Measurement view

Key	Function
◁	No functionality
△	Go to the previous menu in the operation view
▽	Go to the next menu in the operation view
▷	Enter the navigation view

Table 8-2 Alarm view level 1

Key	Function
◁	No functionality
△	Go to the previous menu in the operation view
▽	Go to the next menu in the operation view
▷	Enter alarm view level 2

Table 8-3 Alarm view level 2

Key	Function
◁	Enter alarm view level 1
△	Select the item above in the list; keep pressing the key to accelerate scrolling up the selection list
▽	Select the item below in the list; keep pressing the key to accelerate scrolling down the selection list
▷	Enter alarm view level 3

Table 8-4 Alarm view level 3

Key	Function
◁	Enter alarm view level 2
△	No functionality
▽	No functionality
▷	No functionality

Table 8-5 Operating view level 1

Key	Function
◁	No functionality
△	Previous view
▽	Next view
▷	Enter operating view level 2

Table 8-6 Operating view level 2

Key	Function
◁	Enter operating view level 1
△	Select action to perform
▽	Select action to perform
▷	Perform selected action

Table 8-7 Diagnostic view

Key	Function
◁	No functionality
△	Go to the previous menu in the operation view

Key	Function
▽	Go to the next menu in the operation view
▷	Enter the navigation view

The following graphic shows an example of how to navigate between measurement views and alarm views with measurement views 1, 3, and 4 as well as alarm view 5 enabled.

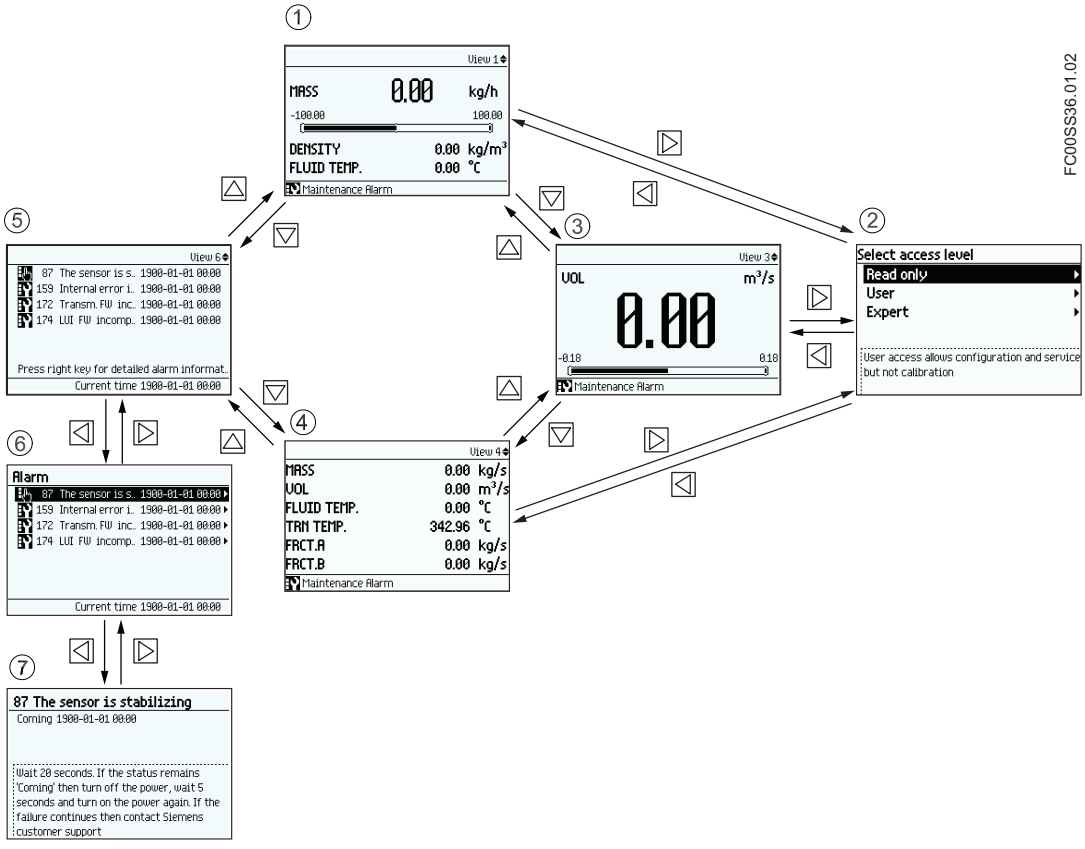

① Measurement view
② Acccess level view
③ Measurement view
④ Measurement view
⑤ Alarm view - level 1
⑥ Alarm view - level 2
⑦ Alarm view - level 3

Navigating the navigation view

Browse the navigation view and menu items using the control buttons as follows:

Table 8-8 Navigation view

Key	Function
◁	Enter the next higher level of the navigation view (for example from level 2 to level 1). If located on level 1 in the navigation view then enter the operation view.
△	Select the item above in the list; keep pressing the key to accelerate scrolling up the selection list. If the key is pressed when the top item is selected, the bottom item will be highlighted.
▽	Select the item below in the list; keep pressing the key to accelerate scrolling down the selection list. If the key is pressed when the bottom item is selected, the top item will be highlighted.
▷	Enter the next lower level of the navigation view (for example from level 1 to level 2). If a parameter is selected in the navigation view then enter the parameter view.

Editing the parameters

When this symbol ✥ is shown in the graphics, the four buttons on the HMI are used for changing the parameters as described below.

Table 8-9 Parameter edit view

Key	Function
◁	Select the next left position. If the most left position is selected, exit the parameter edit view without confirming the changes. Keep pressing the key to jump to the most left position.
△	Change the selected number/character. Numeric characters: increase the number by one (for example from 7 to 8) ASCII characters: select the previous character in the alphabet.
▽	Change the selected number/character. Numeric characters: decrease the number by one (for example. from 8 to 7) ASCII characters: select the next character in the alphabet.
▷	Select the next right position. If most right position is selected, confirm the change and exit the parameter edit view. Keep pressing the key to jump to the most right position.

Table 8-10 Parameter read only view

Key	Function
◁	Exit parameter edit view
△	No functionality
▽	No functionality
▷	No functionality

8.1.1.2 Access control

The user can view all parameters in the HMI menu but the parameters are protected against changes with access level control. The user gains access when entering the navigation view by selecting one of the following access levels.

- Read Only
  Allows no configuration. The user is only able to view the parameter values. No PIN code required.
- User
  Allows configuration and service of all parameters except calibration parameters. Default PIN code is 2457.
- Expert
  Allows configuration and service of all parameters including flow and density calibration parameters. Default PIN code is 2834.

PIN codes can be changed in menu 5 "Security".

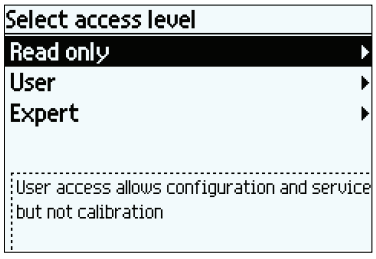

The exact structure of the operating menu is explained in the HMI menu structure (Page 249).

Note

Lost PIN code

If the PIN code is lost, provide Siemens customer support with the transmitter serial number (see nameplate). Siemens customer support will provide a code to be entered in Reset PINs (menu item 5.1.3).

Disable access level control

If logged in as "Expert" you can "Disable Access Level Control" meaning that you will always be logged in as "User" and will not be prompted to enter the password. Enabling the access level control requires entering the "Expert" password.

Auto Log Off function

With the "Auto Log Off" function enabled (default), you will be prompted to enter the password if no keys have been pressed for ten minutes before operating the display again. With the "Auto Log Off" function disabled, you will **not** be prompted to enter the password before operating the HMI.

NOTICE
Device restart Whenever the device is restarted, the access level is reset to Read Only.

8.1.1.3 Operation view

- The operation view can be displayed in up to six user-configured views. Switch manually between the enabled views with the keys △ and ▽. The actual operator view number (1 to 6) is shown in the upper right corner of the figures below.

The view types including the number of process values shown in the operation view are configured in HMI menu structure (Page 249).

In view 1 only measurement or diagnostic views can be selected. In views 2 to 6 all view types can be selected.

Navigation view can only be accessed by pressing the right key in a measurement or a diagnostic view.

- Measurement views
  - Single value
  - Three values
  - One value and bargraph
  - One value and graph
  - Six values
- Operating views
  - Totalizer
  - Dosing
- Alarm view
  - Alarm List
- Diagnostic view
  - Six Diagnostic Values

In general, all of the HMI views show the following:

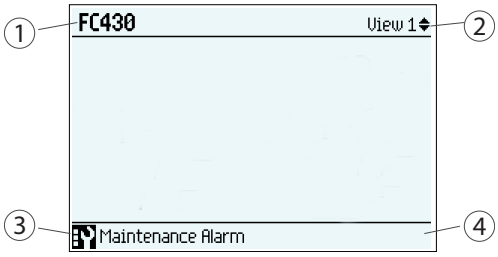

①	Long TAG	Describes the measurement point and is shown in all operation views. Can be changed via the menu "Long TAG" (3.1.1).
②	View number	Shows the operation view number. The number refers to the view number configured in the menu "Setup" → "Display".
③	Alarm icon	Indicates an active alarm. Shows the alarm class, see Device status symbols (Page 175). Only shown if an alarm is active.
④	Alarm status text	Describes the alarm. Only shown if an alarm is active.

8.1.1.4 Measurement views

Measurement views

Single value

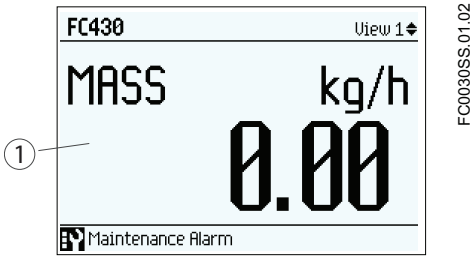

①	Process value	The user-defined process value to be displayed is configured in menu "View" (1-6) located at "Setup" → "Display"

Three values

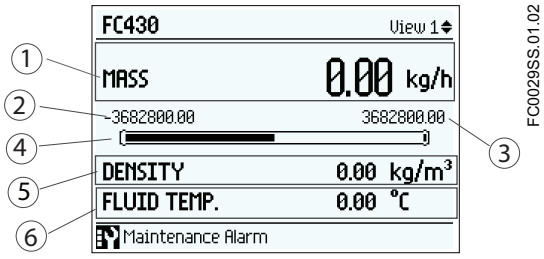

①	First process value	The user-defined process value to be displayed is configured in menu "View" (1-6) located at "Setup" → "Display"
②	Lower Limit Alarm	The lower limit of the bar graph is defined by the lower alarm limit of the selected process value.
③	Upper Limit Alarm	The upper limit of the bar graph is defined by the upper alarm limit of the selected process value.
④	Bargraph	Shows the first process value in relation to its configured maximum and minimum limits (Upper Alarm Limit and Lower Alarm Limit for the selected process value).
⑤	Second process value	The user-defined process value to be displayed is configured in menu "View" (1-6) located at "Setup" → "Display"
⑥	Third process value	The user-defined process value to be displayed is configured in menu "View" (1-6) located at "Setup" → "Display"

Note

Bargraph

The bargraph limits are defined as the lower and upper alarm values.

One value and bargraph

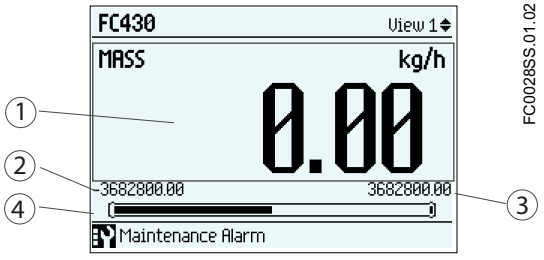

①	Process value	The user-defined process value to be displayed is configured in menu "View" (1-6) located at "Setup" → "Display"
②	Lower Limit Alarm	The lower limit of the bar graph is defined by the lower alarm limit of the selected process value.
③	Upper Limit Alarm	The upper limit of the bar graph is defined by the upper alarm limit of the selected process value.
④	Bargraph	Shows "1st Process value" in relation to its configured maximum and minimum limits (Upper Alarm Limit and Lower Alarm Limit for the selected process value).

Note

Bargraph

The bargraph limits are defined as the lower and upper alarm values.

One value and graph

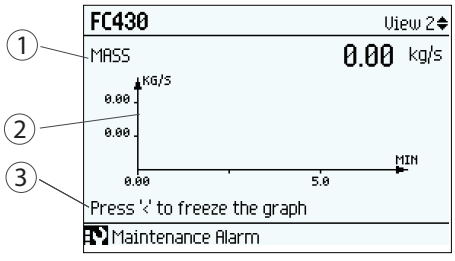

①	Process Value	
②	Graph	
③	Instruction	Press ◁ to freeze/unfreeze display

Six values

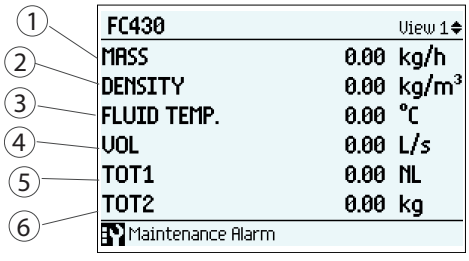

①	First process value	The user-defined process value to be displayed is configured in menu "View" (1-6) located at "Setup" → "Display"
②	Second process value	The user-defined process value to be displayed is configured in menu "View" (1-6) located at "Setup" → "Display"
③	Third process value	The user-defined process value to be displayed is configured in menu "View" (1-6) located at "Setup" → "Display"
④	Fourth process value	The user-defined process value to be displayed is configured in menu "View" (1-6) located at "Setup" → "Display"
⑤	Fifth process value	The user-defined process value to be displayed is configured in menu "View" (1-6) located at "Setup" → "Display"
⑥	Sixth process value	The user-defined process value to be displayed is configured in menu "View" (1-6) located at "Setup" → "Display"

8.1.1.5 Operating views

Operating Views

Totalizer (level 1)

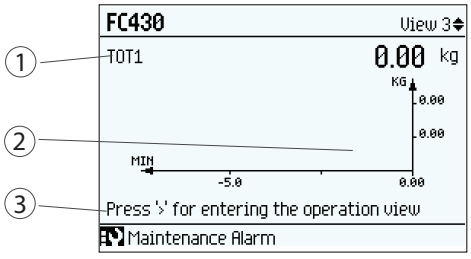

① Process value
② Graph
③ Instruction Press ▷ to enter the operation view.

Totalizer (level 2)

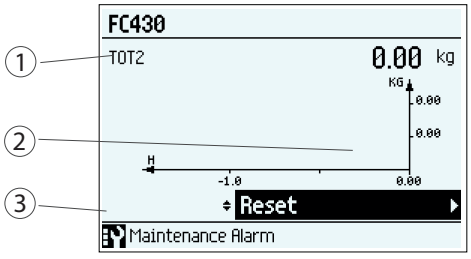

① Process value
② Graph
③ Control

Dosing (level 1)

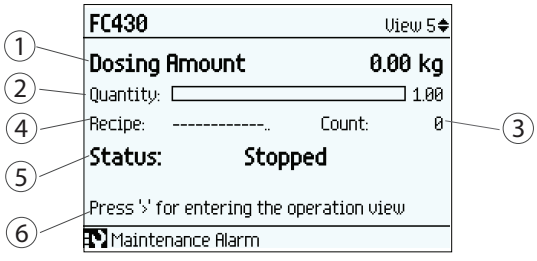

①	Dosed amount	Actual dosed amount
②	Quantity	Set dosing amount
③	Count	Number of dosings
④	Recipe	Name of the selected recipe
⑤	Status	Dosing status
⑥	Instruction	Press ▷ to enter the operation view.

Dosing (level 2)

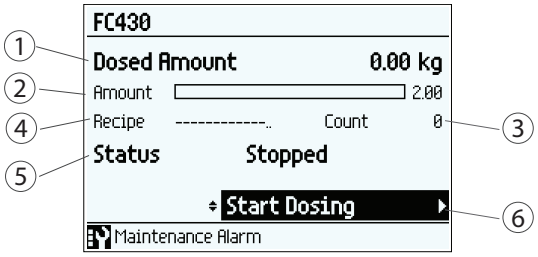

①	Dosed amount	Actual dosed amount
②	Amount	Dosing progress
③	Count	Number of dosings
④	Recipe	Name of the selected recipe
⑤	Status	Dosing status
⑥	Control	Dosing control

8.1.1.6 Alarm views

Alarm views

Alarm List (level 1)

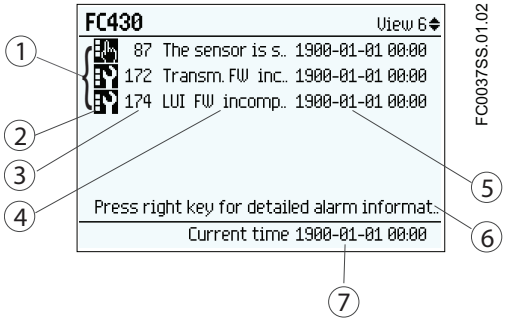

①	List of alarms	List of all active alarms in device.
②	Alarm icon	Shows the alarm class, see Device status symbols (chart) (Page 176).
③	Alarm identification number	Shows the alarm identification number, see Device status symbols (chart) (Page 176).
④	Alarm text	Short alarm name. The complete alarm text can be viewed in the detailed alarm information view.
⑤	Alarm time stamp	Timestamp with the actual date and time when the alarm occurred.
⑥	Instruction	Press right key for detailed alarm information.
⑦	Current time	Shows the current date and time.

In the alarm list (level 1) the active alarms are listed. Press ▷ to access the alarm list (level 2).

Alarm List (level 2)

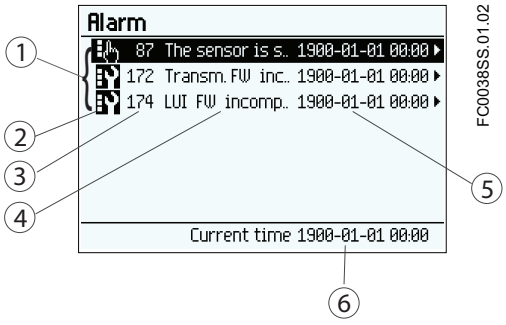

①	List of alarms	List of all active alarms in device. Each Alarm can be selected for detailed information.
②	Alarm icon	Shows the alarm class, see Device status symbols (chart) (Page 176).
③	Alarm identification number	Shows the alarm identification number, see Device status symbols (chart) (Page 176).
④	Alarm text	Short alarm name. The complete alarm text can be viewed in the detailed alarm information view.
⑤	Alarm time stamp	Timestamp with the actual date and time when the alarm occurred.
⑥	Current time	Shows the current date and time.

In the alarm list (level 2) it is possible to select any of the active alarms. Press ▲ or ▼ to scroll through the alarm list. Press ▶ to access detailed information of the highlighted alarm (level 3).

Alarm List (level 3)

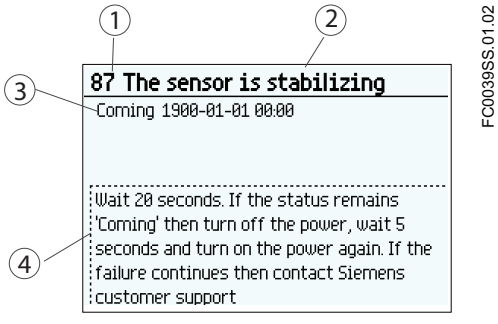

①	ID	Alarm identification number.
②	Diagnostic	Describes possible causes.
③	Coming	Time stamp for alarm occurrence.
④	Action	Describes corrective action.

In the detailed alarm information view (level 3) the diagnostic and action texts are displayed. Press ◀ to exit the detailed information view.

Alarm acknowledgement

There are two ways to have the alarms removed from the alarm list.

- Manual: The alarm remains in the alarm list until the alarm is manually acknowledged (ack.). The time of the acknowledgement is shown in the history log.
- Auto: The alarm is removed from the alarm list when the cause is removed (going)

8.1.1.7 Diagnostic views

Diagnostic view

Six Diagnostic Values

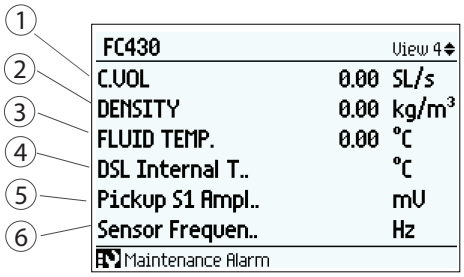

①	First process/diagnostic value	The user-defined process value to be displayed is configured in menu "View" (1-6) located at "Setup" → "Display"
②	Second process/diagnostic value	The user-defined process value to be displayed is configured in menu "View" (1-6) located at "Setup" → "Display"
③	Third process/diagnostic value	The user-defined process value to be displayed is configured in menu "View" (1-6) located at "Setup" → "Display"
④	Fourth process/diagnostic value	The user-defined process value to be displayed is configured in menu "View" (1-6) located at "Setup" → "Display"
⑤	Fifth process/diagnostic value	The user-defined process value to be displayed is configured in menu "View" (1-6) located at "Setup" → "Display"
⑥	Sixth process/diagnostic value	The user-defined process value to be displayed is configured in menu "View" (1-6) located at "Setup" → "Display"

8.1.1.8 Navigation view

Navigation view

The navigation views present the menu structure of the device. All menu items are uniquely identified with menu item number.

Level 1 of the navigation view (entered from the operation view) is standardized for all Siemens Process Instrumentation devices and covers the following groups:

1. Quick Start (menu): Lists the most important parameters for quick configuration of the device. All parameters in this view can be found elsewhere in the menu.
2. Setup (menu): Contains all parameters which are needed to configure the device.
3. Maintenance & Diagnostics (menu): Contains parameters which affect the product behavior regarding maintenance, diagnostics and service.
   Examples: Verification, failure prediction, device health, data logging, alarm logging, report, condition, monitoring, tests, etc.
4. Communication (menu): Contains parameters which describe the Profibus, Profinet, HART, Modbus, X-bus communication settings of the device.
5. Security (menu): Contains parameters which describe all security settings of the device.
6. Language (parameter): Parameter for changing the language of the HMI. Regardless of the language setting, the term for this parameter is always the English term (Language).

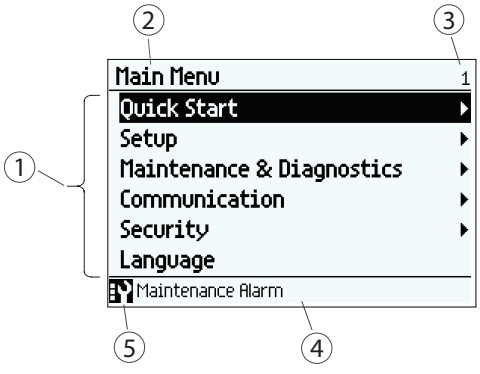

① List of menus and parameters
② Name of the previously selected menu
③ Menu item number of highlighted menu
④ Alarm status text
⑤ Alarm icon

Figure 8-2 Example of display in navigation view

Menu item

In navigation view menus are identified by an arrow in the most right position.

When a menu is selected, the background turns black.

Figure 8-3 Menu in navigation view "Quick start" selected "Setup" not selected.

For further information on how to gain access to the menus, see Access control (Page 119).

Parameter item

In navigation view parameters are shown without an arrow in the most right position except when the parameter is selected. When selected, the parameter is expanded into two lines; the second line shows the value of the parameter, a lock icon (🔒) (only for read access level of the parameter), and an arrow in most right position.

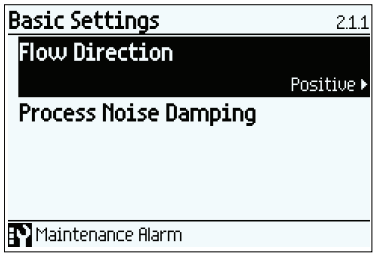

Figure 8-4 Navigation view ReadWrite

The selected parameter can be edited in the parameter view.

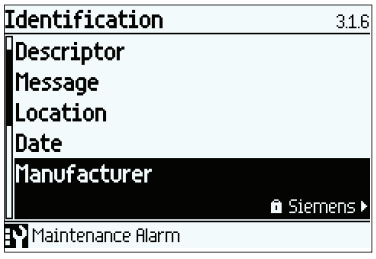

Figure 8-5 Navigation view ReadOnly

The selected parameter can only be viewed in the parameter view

8.1.1.9 Parameter view

Depending upon your access level, you can edit the value of the selected parameter or read the current value.

Numeric parameters edit view

Numeric parameters in edit view are displayed as shown here.

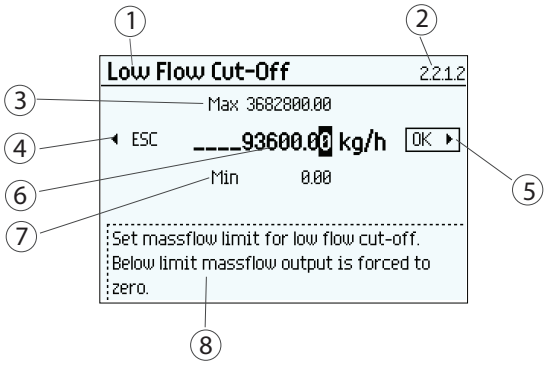

① Parameter name
② Parameter item number
③ Maximum value
④ Escape without saving (frame around ESC is only shown when cursor is in left-most position)
⑤ Confirm and save (frame around OK is only shown when cursor is in right-most position)
⑥ Value to be edited
⑦ Minimum value
⑧ Help text describing the parameter function. The help text appears if no key is pressed for three seconds.

Figure 8-6 Numeric parameter edit view

Note

signs in display

The display is unable to show the measured value. Change the measurement unit or the resolution.

Changing a value:

1. Select the digit to be changed by pressing ▷ and ◁ keys.
2. Use △ key to increase the value and ▽ key and decrease the values.
3. Press ▷ key in the rightmost position to confirm the changes, or press ◁ key in the leftmost position to escape the view without changing the value.

   Note

   Ensure that the new value is within the minimum/maximum range.

Changing the resolution:

1. Select decimal point by pressing ▷ and ◁ keys.
2. Move decimal point by pressing △ key (moves decimal point to the left) or ▽ key (moves decimal point to the right).

In order to change the resolution of the process value shown in the operation view (for example massflow), change the resolution of one configuration parameter for this process value (for

example "Low Flow Cut-off" (menu item 2.2.1.2)). Any changes in resolution will change the resolution of all configuration parameters for this process value as well.

The resolution can also be changed by setting the decimal places parameter for the selected process value, for example the decimal places for process value Massflow is defined in parameter menu item 2.2.1.8.

Numeric parameter read only view

Numeric parameters in read only view are displayed as shown here.

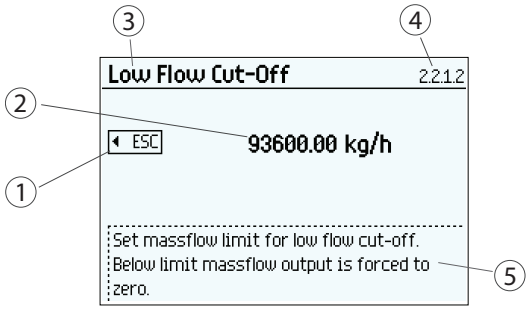

① Escape
② The set value
③ Parameter name
④ Parameter item number
⑤ Help text describing the parameter function.

Figure 8-7 Numeric parameter read only view

The read only view is shown if you don't have access to edit parameters. The view shows the set value. Press ◁ to escape the view.

Parameter list edit view

Lists of parameters in edit view are displayed as shown here.

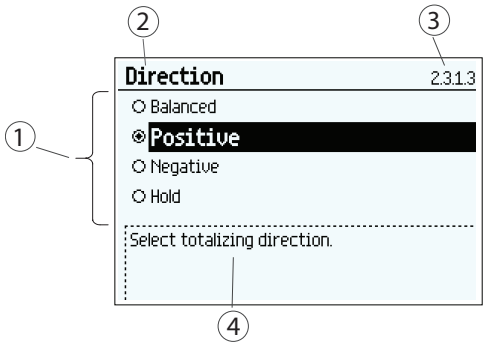

① Parameter list
② Parameter name
③ Parameter item number
④ Help text describing the parameter function. The help text appears if no key is pressed for three seconds.

Figure 8-8 List Selection edit view

Select the value by using △ and ▽ keys, and press ▷ to confirm changes. Press ◁ to escape the view without changing the value.

Parameter list read only view

Lists of parameters in read only view are displayed as shown here.

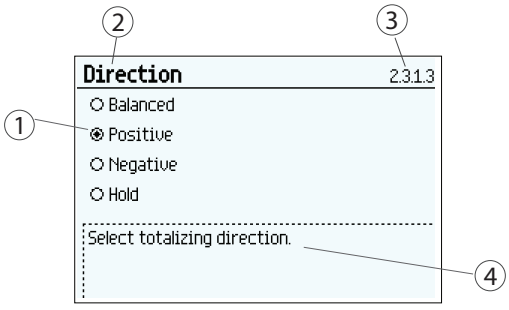

① Parameter value selected

② Parameter name

③ Parameter item number

④ Help text describing the parameter function. The help text appears if no key is pressed for three seconds.

Figure 8-9 List selection read only view

The read only view is shown if you do not have access to edit parameters. Press ◁ to escape the view.

Multiselection view

It is possible to select/deselect multiple alarms to be suppressed.

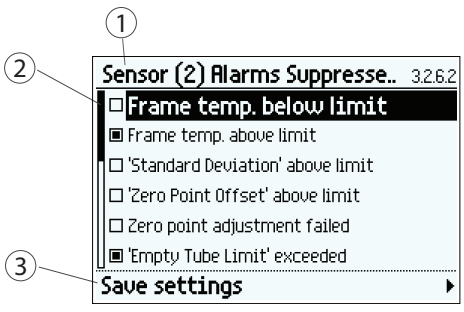

① Parameter name

② Alarm list

③ Save settings (select and press right key to save settings)

Use △ and ▽ to scroll through the alarms. Use ▷ to select/deselect the alarm.

The marked alarms will NOT be suppressed.

Note

Save settings

To activate the selections, press ▷ to save settings before leaving the view.

8.1.2 Remote operation

8.1.2.1 @copy template - link to Remote Opn app

<list remote operation tools supported by device and include link to Remote operation appendix.>

Parameter assignment 9

9.1 Upper scaling settings

Setting	The range is shown as minimum and maximum values in the HMI.
Default	See HMI menu structure (Page 249).

Process value (2.4.2.2) is set to Massflow, Volumeflow, Corrected volumeflow, Fraction A (Massflow or Volumeflow) or Fraction B (Massflow or Volumeflow)

Setting	The range is shown as minimum and maximum values in the HMI.
Default	1600.0 [kg/m³]

Process value (2.4.2.2) is set to Density

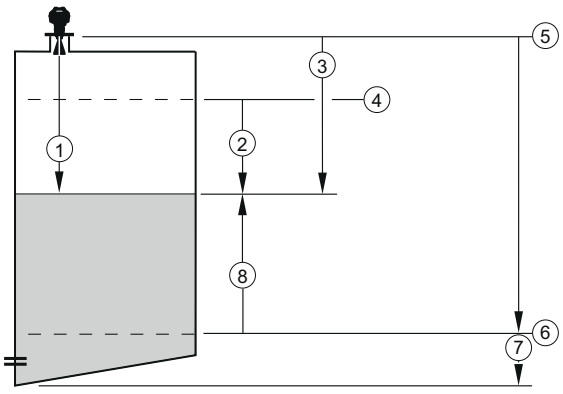

① Sensor value
② Space
③ Distance
④ High calibration point
⑤ Sensor reference point [see Dimension drawings]
⑥ Low calibration point
⑦ Far range
⑧ Level

Related

The Massflow, Volumeflow, Corrected volumeflow or Fraction range and default setting are dependent on the selected **Process value** (2.4.2.2), the selected process value **Unit** (2.2.1.1 for Massflow, 2.2.2.1 for Volumeflow, 2.2.3.1 for Corrected volumeflow, 2.2.7.2 for Fraction (Massflow), or 2.2.7.3 for Fraction (Volumeflow)) and the sensor size.

The Density or Fluid temperature range and default setting are dependent on the selected **Process value** (2.4.2.2) and the selected process value **Unit** (2.2.5.1 for Density and 2.2.6.1 for Fluid temperature).

Parameters are identified by name and organized into function groups.

Parameters accessible via the local display are followed by the device menu number in parenthesis. Parameters not followed by a number are accessible only via remote operation.

9.2 Functions

9.2.1 Process values

The process values are updated every 10 ms (100 Hz update rate) synchronous with the DSP update cycle.

Process value parameters

The process values are:

- Mass flow
- Volume flow
- Standard volume flow
- Density
- Process media temperature
- Fraction A (mass flow or volume flow)
- Fraction B (mass flow or volume flow)
- Fraction A %
- Fraction B %

For SIL ordered flowmeters, mass flow, volume flow and density are available to be allocated to the current output on Channel 1

For non SIL ordered flowmeters, all process values are available to be located to the current output, Modbus RS485 and Profibus on Channel 1

For Channel 2 to 4 all all process variables are available

Limits and hysteresis

Limits

Limit alarms and warnings can be assigned to all process values. The following limit parameters are available for each process value:

- Upper Limit Alarm
- Upper Limit Warning
- Lower Limit Warning
- Lower Limit Alarm
- Alarm Hysteresis

The system reports a process alarm when the process value exceeds the Upper Limit Alarm or the Lower Limit Alarm. Likewise, the system reports a process warning when the process value exceeds the Upper Limit Warning or the Lower Limit Warning. Process value alarms and warnings are displayed in the HMI as well as at the communication interfaces.

Hysteresis

The hysteresis functions as follows:

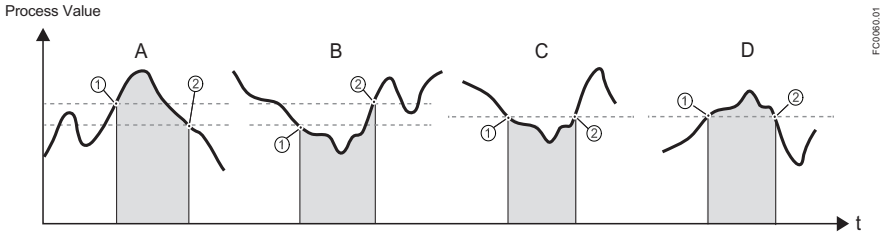

Figure 9-1 Hysteresis

A: Upper Alarm Limit with hysteresis
The alarm is triggered when the process value overshoots the Upper Alarm Limit (1). The alarm is cleared when the process value undershoots the Upper Alarm Limit minus hysteresis (2).

B: Lower Alarm Limit with hysteresis
The alarm is triggered when the process value undershoots the Lower Alarm Limit (1). The alarm is cleared when the process value overshoots the Lower Alarm Limit plus hysteresis (2).

C: Lower Alarm Limit without hysteresis
The alarm is triggered when the process value undershoots the Lower Alarm Limit (1). The alarm is cleared when the process value overshoots the Lower Alarm Limit (2).

D: Upper Alarm Limit without hysteresis
The alarm is triggered when the process value overshoots the Upper Alarm Limit (1). The alarm is cleared when the process value undershoots the Upper Alarm Limit (2).

Note

Flow direction warning

The limit function can be used to signal the flow direction by setting the Lower Limit Warning for the Process Value to 0. A warning will occur in case of negative flow

---

All alarms and warnings can be signaled on the output if Status Mode is set to Individual alarms, see Digital output (Page 153).

Limit behavior on the outputs

Process Alarms can trigger Fail Safe behavior on the Signal Output, whereas Process Warnings are only used as information available in HMI and on the communication. Process value will bring the Signal output to Fail Safe mode if:

- Signal Output is configured to Current, Pulse or Frequency

- Fail Safe Mode is configure to react on a failure

- Process Alarm occurs on a process value selected on the output

The alarm behavior is described in detail below.

Detail alarm behavior is described in Device status symbols (Page 175).

Hysteresis is used to adjust the tolerance by undershooting or overshooting the limit as described below.

Process value derivations

The front-end of the device measures time and derives the values of certain process variables from those measurements. The time period of vibration of the two measuring tubes is inversely proportional to their frequency, which is used to determine density. The average difference in phase of the two measuring tubes is dependent upon the mass flowrate of the process medium. In this measurement context, phase difference is expressed not in degrees of rotation but as an absolute time measurement. For this reason the result of zero offset correction is displayed in µs, being the unit of the true measurement.

The process variables are interrelated and derived in the following fashions:

- Mass flow: proportional to the phase difference between pickup 1 and pickup 2, with compensations for changes in the metal characteristics due to tube and frame metal temperatures[1)].
- Volume flow: derived directly from the ratio of massflow and media density.
- Standard volume flow: derived from the ratio of massflow and standard density[2)].
- Density: derived from the average frequency of sensor tube vibration with compensation for changes in the metal characteristics with tube temperature. The relationship between density and vibration frequency is an inverse square-law curve which can be fitted to 3 reference points being the densities of air, hot water and cold water.
- Process media temperature: derived from the tube metal temperature. This is a legitimate measurement outcome since the tube walls are thin and they are within a sealed, protected environment, thereby giving similar sensitivity as an insertion thermometer.
- Frame temperature: Derived from the sensor frame termperature
- Fraction A (massflow or volumeflow): derived from the combination of media density and temperature, and compared with a stored table of fraction percentage against a wide range of both process values through a fifth-order polynomial[3)]
- Fraction B (massflow or volumeflow): ditto but fraction B is "Flow – A"
- Fraction A %: as for fraction A quantity but A% is the ratio between Fraction A flow and Total flow
- Fraction B %: ditto but B% is "100% – A%"

[1)] Metal temperatures are measured using precision Pt1000 sensors. The accuracy of the temperature measurement is ±0.5 °C.

[2)] Standard density is the density of the media at reference conditions, normally atmospheric pressure and 20 °C. Standard density can be programmed into the flowmeter menu in two forms, either as a fixed reference or with a selection of linear or square-law temperature dependence. The choice of fixed or calculated standard density and of linear or square-law temperature dependency is according to the application and user preferences.

[3)] The customer-specified density/temperature tables may be derived from the mass fraction or volume fraction of any two-part mixture. Fraction calculations are naturally performed in the ratio provided, or in mass ratio when using the built-in tables. Volume or mass ratios derived from the fraction table are calculated through the composite media density.

9.2.2 Zero point adjustment

In the following the automatic zero point adjustment function is described. For further details, see the appendix Zero point adjustment.

Note

Preconditions

Before a zero point adjustment is initiated, the pipe must be flushed, filled and at an absolute flowrate of zero preferably also at operating pressure and temperature. Refer to "Zero point adjustment" via HMI or PDM for more details.

Note

Change of parameters during zero point adjustment

Do not change any other parameter during the zero point adjustment procedure.

Automatic zero point adjustment

The device measures and calculates the correct zero point automatically.

The automatic zero point adjustment of the flowmeter is set by the following parameters:

- Duration
- Start Zero Point Adjustment

When zero adjust is initiated by selecting "Start Zero Point Adjustment", the massflow values are acquired and totalized for the configured period (Duration). The default zero point adjustment period (30 s.) is normally sufficient for a stable zero point measurement.

Note

Extremely low flow quantity

If the flow quantity is extremely small, extremely precise measurement is necessary. In this case, a long zero point adjustment period can be selected for improved zero point adjustment.

Zero point calculation

During zero point adjustment, an average value is automatically calculated from a large number of samples. The resultant flow value represents an offset from true zero flow. The standard deviation is also calculated which represents the stability of the zero offset value.

Successful automatic zero point adjustment

If the new zero point offset value is valid, it is automatically stored as the new zero point for the sensor. It remains stored in the case of a power failure.

Manual zero point adjustment

In case an automatic zero point adjustment cannot be performed, it is possible to do a manual zero point adjustment by entering the zero point offset value.

1. Select "Manual" in "Select Zero Point Adj." (menu item 2.6.1).
2. Enter the desired value in "Offset" (menu item 2.6.8).

9.2.3 Low flow cut-off

In certain applications, as for instance dosing applications, 0% flow signals below a certain flowrate are desired. In these applications, the flow signal can be forced to zero, when the flow is lower than a predefined flow value (Low Flow Cut-Off).

The device provides two parameters for setting the low flow cut-off:

- Low Mass Flow Cut-Off
- Low Volume Flow Cut-Off

The low flow cut-off parameters influence all outputs of the device, for example Local User Interface, Channel 1 to 4, and bus communication outputs.

Depending on the process values selection of the output either Low Mass Flow Cut-Off or Low Volume Flow Cut-Off will influence the output.

9.2.4 Empty tube monitoring

The empty tube monitoring function uses the process density for detecting an empty tube. Use of this function is recommended for all standard applications.

Note

Gas applications

Deactivate the empty tube monitoring function.

Empty tube monitoring parameters

Two parameters for setting the empty tube monitoring function are available:

- Empty Tube Detection (Modbus address 2129)
- Empty Tube Limit (Modbus address 2127)

The empty tube monitoring is activated via the Empty Tube Detection parameter. When the empty tube monitoring function is on, the massflow / volumeflow value is forced to zero if the tube is empty.

The tube is defined as empty, if the measured density value is lower than the value defined via the Empty Tube Limit parameter.

Note

Process media density

Risk of unintentionally forcing flow values to zero, if the difference between the empty tube limit density value and the density of the process media is not sufficient.

- Ensure sufficient difference between the empty tube limit density value and the process media density

9.2.5 Process noise damping

Noise damping function

The dynamic sensitivity of the flow measurement signal to rapid changes in process flows can be reduced by use of the process noise damping function. The function is typically used in environment with:

- Strongly pulsating flow
- Changing pump speeds
- Large pressure variations

Process noise damping settings

Reduce interfering process noise by increasing the setting of the parameter "Process Noise Damping".

- Centrifugal pump (1: low)
- Triplex pump (2)
- Duplex pump (3)
- Simplex pump (4)
- Cam pump (5: high)

The default value is "Duplex pump". The damping affects all functions and outputs of the sensor.

Figure 9-2 Centrifugal pump (1: low)

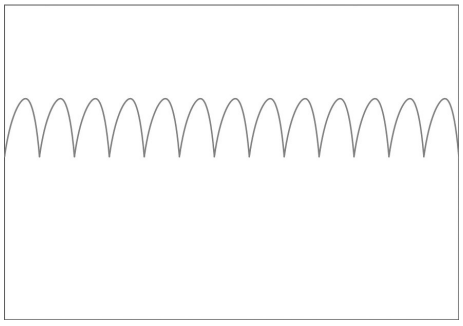

Figure 9-3 Triplex pump (2)

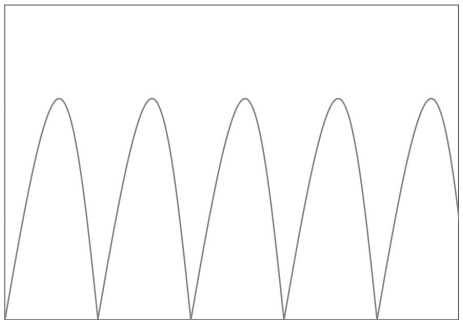

Figure 9-4 Duplex pump (3; default setting)

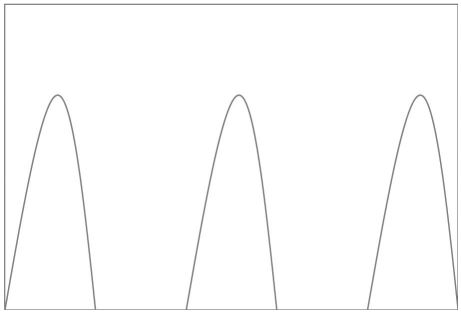

Figure 9-5 Simplex pump (4)

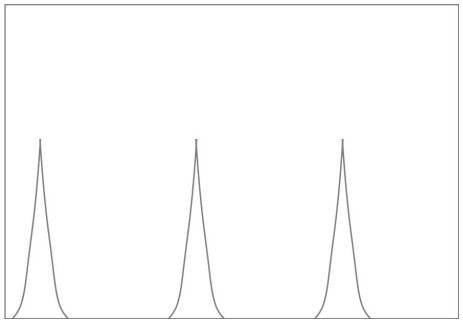

Figure 9-6 Cam pump (5: high)

Note

Increased reaction time

The reaction time of the sensor increases when the process noise is damped.

9.2.6 Inputs and outputs

The hardware functionality of input and output is fixed when ordering the product. The available configuration is described in the following table:

Channel	HW configuration (fixed when ordering)	SW configuration available to the user
1	Current output (4-20 ma) Hart, Modbus, PROFIBUS DP, PROFIBUS PA	
2	Signal output	• Current (0/4-20 mA) • Frequency or pulse • Three-stage analog valve dosing control • Discrete one or two-valve dosing control • Operational and alarm status
3	Signal output	• Current (0/4-20 mA) • Frequency or pulse • Redundant frequency or pulse (together with channel 2) • Three-stage analog valve dosing control • Discrete one or two-valve dosing control • Operational and alarm status
	Relay output	• Discrete one or two-valve dosing control • Operational and alarm status
	Signal input	• Dosing control • Totalizer reset • Remote zero adjust • Force or freeze output(s)

Channel	HW configuration (fixed when ordering)	SW configuration available to the user
4	Signal output	• Current (0/4-20 mA) • Frequency or pulse • Three-stage analog valve dosing control • Discrete one or two-valve dosing control • Operational and alarm status
	Relay output	• Discrete one or two-valve dosing control • Operational and alarm status
	Signal input	• Dosing control • Totalizer reset • Remote zero adjust • Force or freeze output(s)

9.2.6.1 Current output

All four channels can be configured as current output.

Current output configuration

The following process values can be assigned to the current output:

- Mass flow
- Volume flow
- Standard volume flow
- Density
- Temperature
- Fraction A (Volume flow or Mass flow)
- Fraction B (Volume flow or Mass flow)
- Fraction A %
- Fraction B %
- Control valve *

The process variable listed above with * is not available to be allocated to the 4 to 20 mA output on Channel 1. All process variables are available through bus communication (SV, TV and QV variables) and on all of Channels 2 to 4.

The accuracy specified for the analog output signal applies only within the range 4 to 20 mA. Lower limit (4 mA) and upper limit (20 mA) can be assigned to any specific flow values.

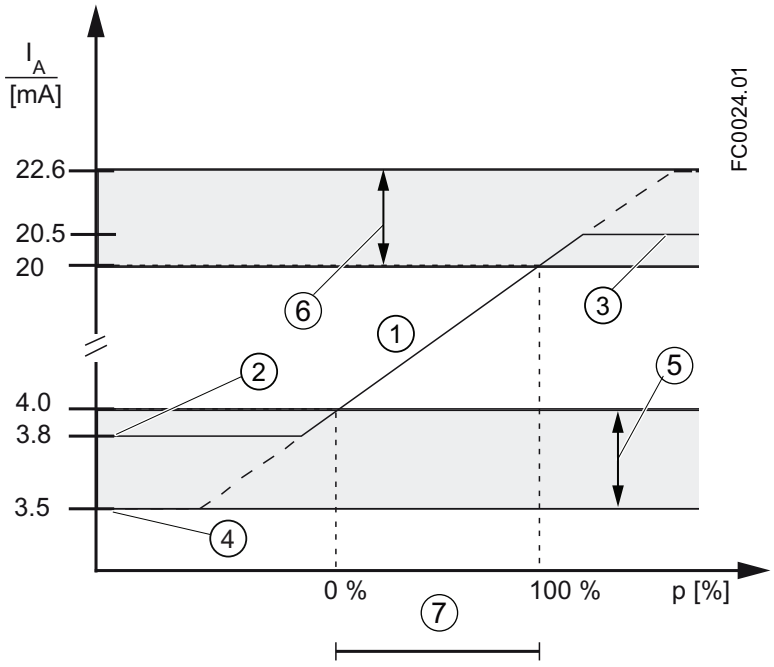

① Linear control range
② Measuring range lower limit
③ Measuring range upper limit
④ Lower fault current value
⑤ Recommended setting range for lower fault current
⑥ Recommended setting range for upper fault current
⑦ Measuring range

Figure 9-7 Current limits for NAMUR configuration

The fail safe current output signal can be selected to:

- Minimum Current (defined in the Current Mode selection)
- Maximum Current (defined in the Current Mode selection)
- Last Good Value (the last process value before the failure occurred)
- Current Value (actual measured value)
- User defined (within the range of 0 mA to 25 mA [1])

[1] For channel 1 the range is 3.5 mA to 25 mA

In the alarms lists inDevice status symbols (Page 175) it is listed which alarms bring the output to fail safe current.

Output scaling configuration

Below are four examples describing configuration possibilities for a current output.

Positive flow with negative scaling

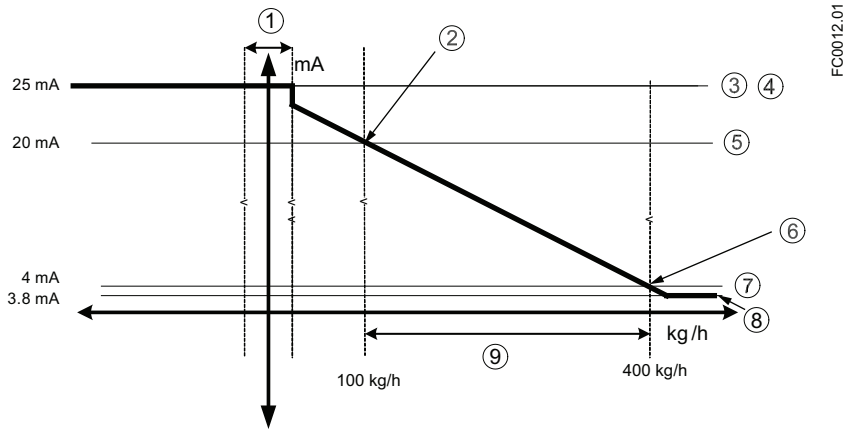

① Low-flow cut-off
② Upper scaling
③ Maximum output current
④ Upper alarm current
⑤ Upper range
⑥ Lower scaling
⑦ Lower range
⑧ Minimum output current
⑨ Measurement range

Current output setting

- Process value = Mass flow
- Direction = Symmetric
- Current Mode = 4-20 mA (maximum 25 mA)
- Upper Scaling = 100 kg/h
- Lower Scaling = 400 kg/h
- Fail Safe Mode = Maximum current
- Low-Flow Cut-Off = 25 kg/h

Positive flow across zero with positive scaling

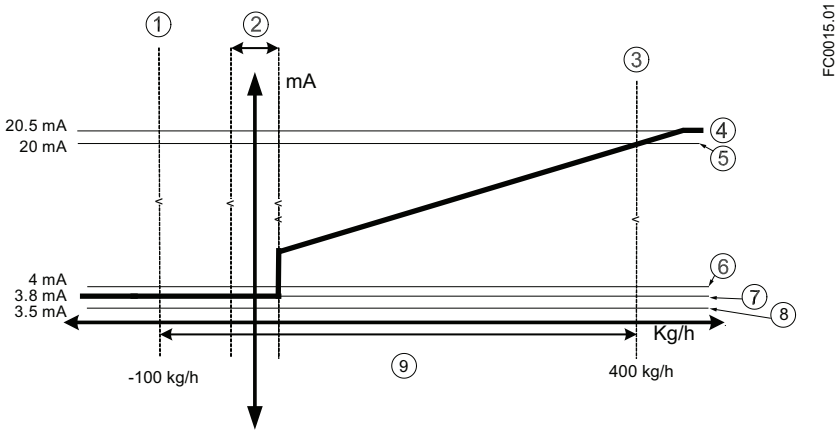

① Lower scaling
② Low-flow cut-off
③ Upper scaling
④ Maximum measurement value
⑤ Upper range
⑥ Lower range
⑦ Minimum measurement value
⑧ Lower alarm value
⑨ Measurement range

Current output setting

- Process value = Massflow
- Direction = Bidirectional
- Current Mode = 4-20 mA NAMUR
- Upper Scaling = 400 kg/h
- Lower Scaling = -100 kg/h
- Fail Safe Mode = Maximum current
- Low-Flow Cut-Off = 25 kg/h

Bidirectional flow across zero with positive scaling

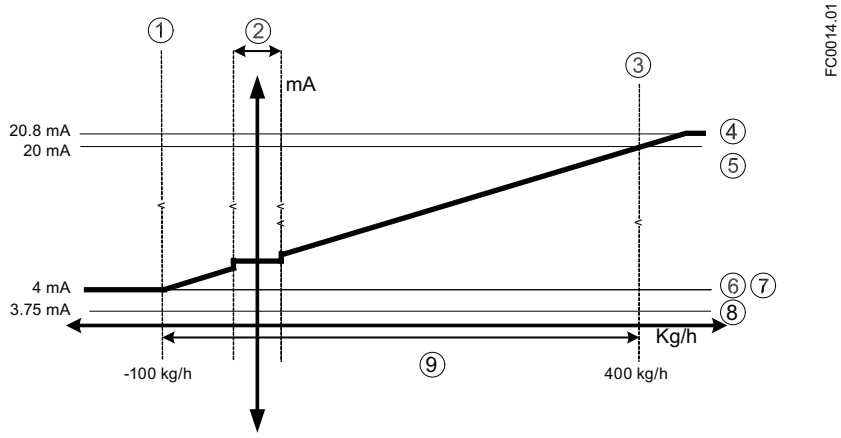

① Lower scaling
② Low-flow cut-off
③ Upper scaling
④ Maximum measurement value
⑤ Upper range
⑥ Lower range
⑦ Minimum measurement value
⑧ Lower alarm value
⑨ Measurement range

Current output setting

- Process value = Massflow
- Direction = Bidirectional
- Current Mode = 4-20 mA US
- Upper Scaling = 400 kg/h
- Lower Scaling = -100 kg/h
- Fail Safe Mode = Minimum current
- Low-Flow Cut-Off = 25 kg/h

Bidirectional flow with symmetrical scaling

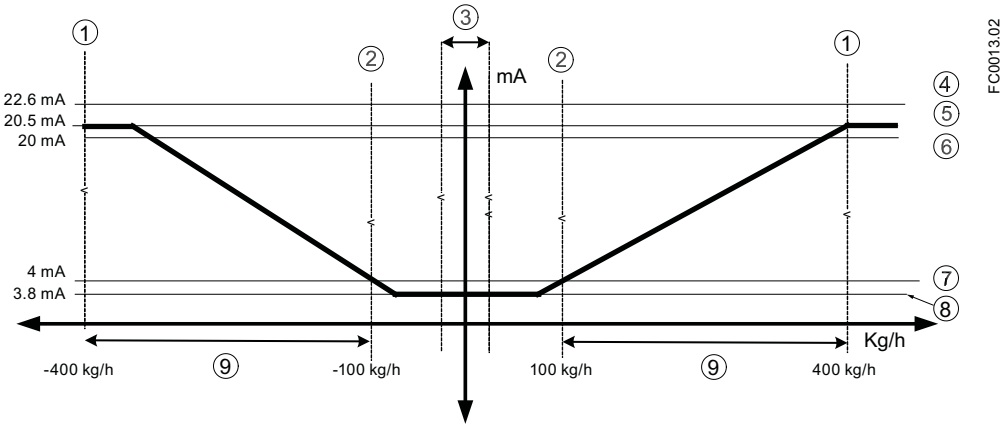

①	Upper scaling
②	Lower scaling
③	Low-flow cut-off
④	Upper alarm value
⑤	Maximum measurement value
⑥	Upper range
⑦	Lower range
⑧	Minimum measurement value
⑨	Measurement range

Current output setting

- Process value = Massflow
- Direction = Bidirectional (Symmetric)
- Current Mode = 4-20 mA NAMUR
- Upper Scaling = 400 kg/h
- Lower Scaling = 100 kg/h
- Fail Safe Mode = Maximum current
- Low-Flow Cut-Off = 25 kg/h

9.2.6.2 Pulse output

The pulse output function supplies pulses equivalent to a configured amount of accumulated volume or mass. The pulse width is configured and the pulse repetition is proportional to the selected flow rate.

Pulse repetition

Pulse repetition is calculated as follows:

$$\text{Pulse repetition} = \frac{\text{Amount per pulse}}{\text{Measured flow rate}}$$

FC0026.01

Note

Pulse width must be selected with the view that remaining time is always greater than pulse width at the highest measured flow.

Example

- Pulse output configuration (channels 2 to 4)
  - Operation mode = Pulse output
  - Process value = Mass flow
  - Amount = 1 kg
  - Pulse width = 1 ms
- Measured mass flow value = 10 kg/s (constant)

Result:

- Pulse repetition = 100 ms
- Output frequency = 10 pulses per second with a pulse width of 1 ms
- Remaining time between pulses is 99 ms

9.2.6.3 Frequency output

The frequency output function supplies a frequency (50% duty cycle) proportional to the selected process value.

Frequency is calculated as follows:

$$\text{Frequency} = \frac{\text{Measured massflow value}}{\text{Flow Value High - Flow Value Low}} \times (\text{Frequency Value High - Frequency Value Low})$$

FC0027.01

Example

This example shows how to calculate the output frequency for any measured flowrate:

Frequency output configuration:

- Operation Mode = Frequency Output (Channel 2 to 4)
- Process Value = Massflow
- Direction = Positive

- Frequency Value High = 12 kHz
- Frequency Value Low = 2 kHz
- Flow Value High = 15 kg/s
- Flow Value Low = 5 kg/s

Measured massflow value = 7.5 kg/s (constant)

Result:

- Frequency = 4.5 kHz

Note

The connected equipment must be capable of registering the full range of frequencies configured.

9.2.6.4 Redundancy mode (frequency)

Redundancy mode

If both channel 2 and channel 3 are configured as frequency outputs, channel 3 can be configured for redundancy mode to follow channel 2 shifted by 90˚or 180˚. If set to redundancy mode, channel 3 inherits all channel 2 settings. The flow direction will determine whether channel 3 is shifted before or after channel 2 at 90° shift.

The following examples describe the frequency functionalities for channel 2 and 3 in redundancy mode:

Channel 2 configured as positive direction and channel 3 set to redundancy mode 90°

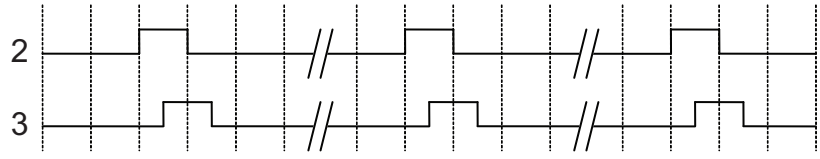

Figure 9-8 Positive flow - channel 3 leads by 90°

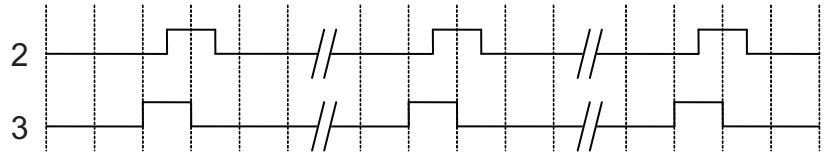

Figure 9-9 Negative flow - channel 3 lags by 90°

Channel 2 configured as positive direction and channel 3 set to redundancy mode 180˚

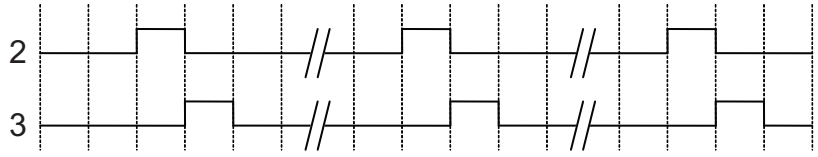

Figure 9-10 Positive flow - channel 3 leads by 180°

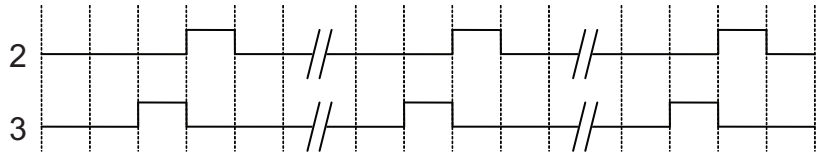

Figure 9-11 Negative flow - channel 3 lags by 180°

Redundancy mode (pulse)

If both channel 2 and channel 3 are configured as pulse outputs, channel 3 can be configured for redundancy mode to follow channel 2 shifted by 90˚or 180˚ of the functional width of the pulse. If set to redundancy mode, channel 3 inherits all channel 2 settings. The functional width of the pulse is two times the pulse "On" duration. The flow direction will determine whether channel 3 is shifted before or after channel 2.

The following examples describe the pulse functionalities for channel 2 and 3 in redundancy mode:

Channel 2 configured as positive direction and channel 3 set to redundancy mode 90°

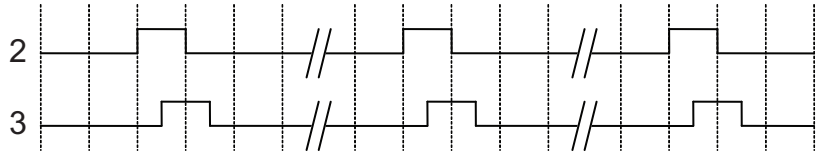

Figure 9-12 Positive flow - channel 3 leads by 90°

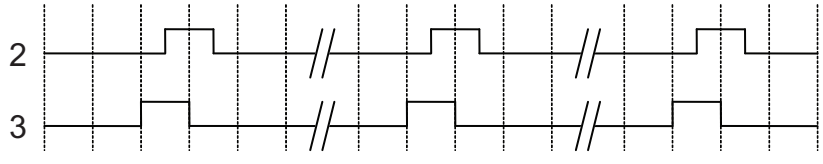

Figure 9-13 Negative flow - channel 3 lags by 90°

Channel 2 configured as positive direction and channel 3 set to redundancy mode 180˚

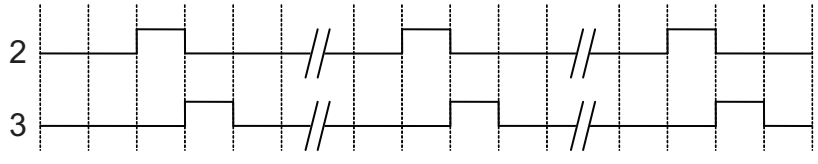

Figure 9-14 Positive flow - channel 3 leads by 180°

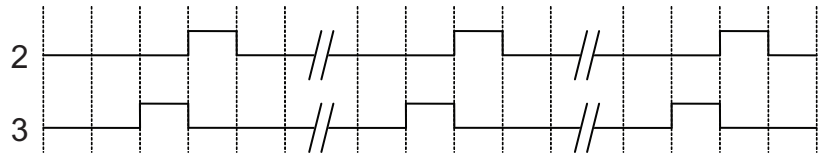

Figure 9-15 Negative flow - channel 3 lags by 180°

9.2.6.5 Digital output

The status output can be used to show alarm status or to control the dosing and it can be signaled on Signal Output or Relay Output.

Depending on the Alarm Mode setting, multiple alarms can be signaled on the output and selected from the alarm class or the Individual alarms lists.

- Alarm Class: Alarm will be signaled if alarm within the selected alarm class occurs.
- Individual alarms: Alarm will be signaled if selected Individual alarms occurs. It is possible to select more multiple alarms to be signaled.

Note

Alarm class

The alarm class options depend on the Alarm Mode setting, either NAMUR or Standard (Siemens Standard), selected in menu item 3.2.1. Both NAMUR and Siemens Standard alarms and their messages are described in more detail in Fault codes and corrective actions (Segment display) (Page 179).

The control output can be used for controlling discrete valve dosing and analog valve dosing as described in Dosing (Page 154).

9.2.6.6 Input

If the input is activated with a logic signal (15 - 30 V DC), the meter carries out an activity selected in the menu.

The following input options are available:

- Start dosing
- Hold / continue dosing
  - When this function is activated, it will pause the dosing. When it is deactivated, the dosing will continue
- Stop dosing
  - Sets the digital output to "Off" and resets the dosing counter
- Zero adjust
  - Starts the automatic zero point adjustment. This function employs the existing configurations and presumes that the process conditions are prepared for the zero point adjustment routine

- Reset totalizer
  - Resets one of the internal totalizers 1, 2 or 3 (depending on configuration)
- Resets all totalizers simultaneously
- Freeze signal
  - Freezes all currently measured values in the display and outputs
- Force signal
  - Forces all outputs to adopt the value selected in the menu. If the value 100% is selected, the current output will show 20 mA and the frequency output will show 10.000 kHz when the external output is activated

⚠ WARNING
Changing polarity
Changing the polarity triggers the signal input to execute the set functionality.

9.2.7 Totalizers

Totalizer functions

The device has three independent totalizers that can be used to total the massflow, volumeflow, corrected volumeflow, fraction A (volumeflow or massflow) or fraction B (volumeflow or massflow).

The totalizers can be configured to count balance (net flow), positive flow or negative flow.

In case of failure in the system, the totalizer fail safe mode can be set to:

- Hold (default): the totalizer holds the last value before the failure occurred

- Run: the totalizer continues counting the actual measured value

- Memory: the totalizer continues counting based on the last input value (for example massflow) before the failure occurred.

The totalizers can be operated via the Local User Interface or bus communication (for example SIMATIC PDM). The totalizers can be reset or preset.

9.2.8 Dosing

The dosing function controls the sequence of flow through one or two valves into a container. The user can set the Amount and the sequence of controlling the valve(s). The dosing function then controls the valves to open and close in sequence to achieve the Amount.

The process values for dosing control are updated with 100 Hz to ensure maximum response time of 10 ms to rapidly changing flows.

The flow sequence can be paused, resumed and ended by the user at any point in the flow sequence.

Transmitter outputs therefore change state according to the dosing sequence or operator commands. For optimal dosing control the minimum number of components between the flowmeter and the dosing valves must be employed. The dosing function must be configured for the type of valve used for dosing:

- One on/off valve:
  Dosing controlled by a single discrete (Open/Closed) valve. The valve opens completely when the dosing begins, and closes completely when the dosing Amount is reached.
- Two on/off valves:
  Dosing controlled by two discrete valves (a primary valve and a secondary valve). One valve opens at the beginning of the dosing; the other opens at a user-defined amount. One valve stays open until the end of the dosing; the other closes at a user-defined amount. See examples below (Page 157) of some different opening and closing options.
- Control valve:
  Dosing controlled by an analog valve configured in three stages as fully open, partially closed, and fully closed. See example below (Page 157) of the three-positional Control valve.

Dosing setup procedure

The dosing functionality is configured via HMI. Menu 2.4 "Inputs/Outputs" determines how the transmitter will use the inputs and outputs for dosing control. Menu 2.5 "Dosing" independently determines the sequencing of the outputs to achieve the user's desired result.

The dosing function provides:

- three dosing valve control mechanisms (One on/off valve, Two on/off valves or Control valve)
- dosing of mass flow, volume flow, standard volume flow or fraction flow (mass or volume)
- five independently configurable recipes
- flexible discrete or analog valve control
- fault handling – time and amount monitoring

Configure the dosing function as follows:

1. Basic dosing parameters common for all recipes in menu 2.5 "Dosing"
   - Select valve control functionality at parameter "Dosing Mode"
   - Select measured process value for dosing at parameter "Process Values"
2. Individual recipe(s) in menus 2.5.4 to 2.5.8 as required
   - Setup dosing name, amount, unit and compensation
   - Select valve control sequence
   - Select fault handling configuration
3. Output(s) in menu 2.4 "Inputs/Outputs" (see table below).
4. Input for dosing control in menu 2.4 "Inputs/Outputs"

9.2.8.1 Dosing control configuration

Dosing control includes valve control (discrete/analog) and fault handling. The valve control is done using channels 2, 3 and 4. Dosing control can be configured to:

- One on/off valve
- Two on/off valves
- Control valve

One on/off valve

Use one Signal or one Relay output to control the one-stage dosing. Set the Operating Mode of signal output to Status. Assign Status Mode to control the Primary Valve. A Signal Input can be assigned to start the dosing.

Two on/off valves

Use two Signal or two Relay outputs to control the two-stage dosing. Set the Operating Mode of signal output to Status. Assign one Status Mode to control the Primary Valve and the other to control the Secondary Valve. A Signal Input can be assigned to start the dosing.

Control valve

Use one Signal output to control the Control valve. Assign the Operating Mode to Current Output. A Signal Input can be assigned to start the dosing.

Process Values

The following process values can be used for dosing control:

- Mass flow
- Volume flow
- Standard volume flow
- Fraction A
- Fraction B

Recipes

Five recipes can be configured individually, however only one of the recipes can be active at a time.

9.2.8.2 Valve control configuration

Valve control dosing

Dosing is controlled with either one or two discrete valves or a single analog valve. The transmitter provides up to three input/output channels which can be used for dosing control. The selection of channels is fixed when ordering the system. The channels can be setup for dosing functionality in parameter 2.5.1 "Dosing Mode" as shown in the table below. Allocation of the output to a specific dosing sequence element is performed in the software configuration as follows:

One on/off valve

Configuration of one valve (primary valve).

One of the following channels must be assigned to control the discrete primary valve.

Table 9-1 One on/off valve

Valve control	Channel HW configuration	Output channel	Channel SW configuration		
			Menu item		Value
Discrete valve control - Primary Valve	Signal output	2	2.4.2.1	"Operation Mode"	Status Output
			2.4.2.27	"Status Mode"	Primary Valve Dosing
		3	2.4.3.1	"Operation Mode"	Status Output
			2.4.3.29	"Status Mode"	Primary Valve Dosing
		4	2.4.6.1	"Operation Mode"	Status Output
			2.4.6.27	"Status Mode"	Primary Valve Dosing
	Relay output	3	2.4.4.1	"Status Mode"	Primary Valve Dosing
		4	2.4.7.1	"Status Mode"	Primary Valve Dosing

Two on/off valves

Configuration of two valves (primary and secondary valves)

One of the following channels must be assigned to control the discrete primary valve and one must be assigned to control the secondary discrete valve.

Table 9-2 Two on/off valves

Valve control	Channel HW configuration	Output channel	Channel SW configuration		
			Menu item		Value
Discrete valve control - Primary Valve	Signal output	2	2.4.2.1	"Operation Mode"	Status Output
			2.4.2.27	"Status Mode"	Primary Valve Dosing
		3	2.4.3.1	"Operation Mode"	Status Output
			2.4.3.29	"Status Mode"	Primary Valve Dosing
		4	2.4.6.1	"Operation Mode"	Status Output
			2.4.6.27	"Status Mode"	Primary Valve Dosing
	Relay output	3	2.4.4.1	"Status Mode"	Primary Valve Dosing
		4	2.4.7.1	"Status Mode"	Primary Valve Dosing
Discrete valve control - Secondary Valve	Signal output	2	2.4.2.1	"Operation Mode"	Status Output
			2.4.2.27	"Status Mode"	Secondary Valve Dosing
		3	2.4.3.1	"Operation Mode"	Status Output
			2.4.3.29	"Status Mode"	Secondary Valve Dosing
		4	2.4.6.1	"Operation Mode"	Status Output
			2.4.6.27	"Status Mode"	Secondary Valve Dosing
	Relay output	3	2.4.4.1	"Status Mode"	Secondary Valve Dosing
		4	2.4.7.1	"Status Mode"	Secondary Valve Dosing

Control valve

Configuration of one analog valve.

One of the following channels must be assigned to control the analog valve.

Table 9-3 Control valve

Dosing mode	Valve control	Channel HW configuration	Output channel	Channel SW configuration		
				Menu item		Value
Control valve	Analog	Signal output	2	2.4.2.1	"Operating Mode"	Current Output
				2.4.2.2	"Process Value"	Control valve
			3	2.4.3.1	"Operating Mode"	Current Output
				2.4.3.2	"Process Value"	Control valve
			4	2.4.6.1	"Operating Mode"	Current Output
				2.4.6.2	"Process Value"	Control valve

Note

If the output channels including current output are configured for valve control, they cannot report alarm status or fault levels.

Table 9-4 Parameter settings for Two on/off valves valve control

Valve control parameter configured in each recipe	Default values	Description
Stage 1 Primary Open	0.00 % of Amount	The quantity or percent of the Amount at which the primary valve will open
Stage 1 Primary Close	80.00 % of Amount	The quantity or percent of the Amount at which the primary valve will close
Stage 2 Secondary Open	20.00 % of Amount	The quantity or percent of the Amount at which the secondary valve will open
Stage 2 Secondary Close	100.00 % of Amount	The quantity or percent of the Amount at which the secondary valve will close

Either Stage 1 Primary Open or Stage 2 Secondary Open must be set to 0. For controlling the valves via the outputs, two of channels 2, 3 and 4 must be assigned to Primary Valve Dosing Control and Secondary Valve Dosing control, respectively.

Either Stage 1 Primary Close or Stage 2 Secondary Close must be set to Amount.

In the examples below the primary valve, the secondary valve, and the flow are indicated as follows:

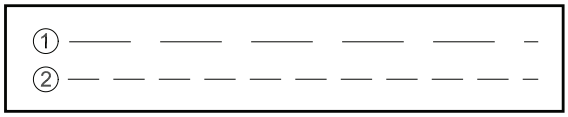

FC0023.01

① Primary valve

② Secondary valve

Examples of valve control configuration

Example 1: Open primary valve at 0 %; close primary valve before closing secondary valve configured in recipe 1

Parameter configuration:

Menu 2.5 Dosing

- 2.5.1 Dosing Mode = Two on/off valves

Menu 2.5.5.6 Valve Control

- 2.5.5.6.1 Stage Setup Format = Relative

- 2.5.5.6.2 Stage 1 Primary Open = 0 %

- 2.5.5.6.3 Stage 1 Primary Close = 66 %

- 2.5.5.6.4 Stage 2 Secondary Open = 33 %

- 2.5.5.6.5 Stage 2 Secondary Close = 100 %

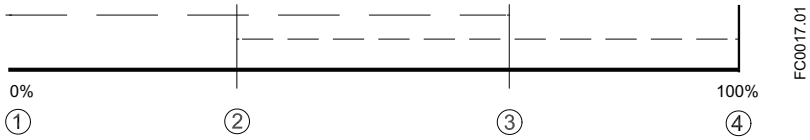

① Open primary valve
② Open secondary valve
③ Close primary valve
④ Close secondary valve

Example 2: Open primary valve at 0 %; close primary valve after closing secondary valve configured in recipe 1

Parameter configuration:

Menu 2.5 Dosing

- 2.5.1 Dosing Mode = Two on/off valves

Menu 2.5.5.6 Valve Control

- 2.5.5.6.1 Stage Setup Format = Relative
- 2.5.5.6.2 Stage 1 Primary Open = 0 %
- 2.5.5.6.3 Stage 1 Primary Close = 100 %
- 2.5.5.6.4 Stage 2 Secondary Open = 33 %
- 2.5.5.6.5 Stage 2 Secondary Close = 66 %

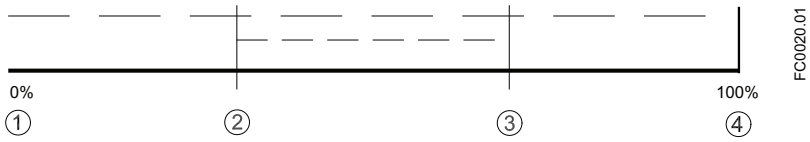

① Open primary valve
② Open secondary valve
③ Close secondary valve
④ Close primary valve

Example 3: Open secondary valve at 0 %; close primary valve before closing secondary valve configured in recipe 1

Parameter configuration:

Menu 2.5 Dosing

- 2.5.1 Dosing Mode = Two on/off valves

Menu 2.5.5.6 Valve Control

- 2.5.5.6.1 Stage Setup Format = Relative
- 2.5.5.6.2 Stage 1 Primary Open = 33 %
- 2.5.5.6.3 Stage 1 Primary Close = 66 %
- 2.5.5.6.4 Stage 2 Secondary Open = 0 %
- 2.5.5.6.5 Stage 2 Secondary Close = 100 %

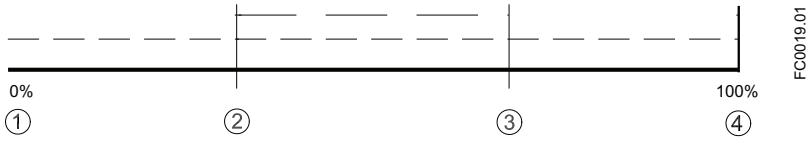

① Open secondary valve
② Open primary valve
③ Close primary valve
④ Close secondary valve

Example 4: Open secondary valve at 0 %; close primary valve after closing secondary valve configured in recipe 1

Parameter configuration:

Menu 2.5 Dosing

- 2.5.1 Dosing Mode = Two on/off valves

Menu 2.5.5.6 Valve Control

- 2.5.5.6.1 Stage Setup Format = Relative
- 2.5.5.6.2 Stage 1 Primary Open = 33 %
- 2.5.5.6.3 Stage 1 Primary Close = 100 %
- 2.5.5.6.4 Stage 2 Secondary Open = 0 %
- 2.5.5.6.5 Stage 2 Secondary Close = 66 %

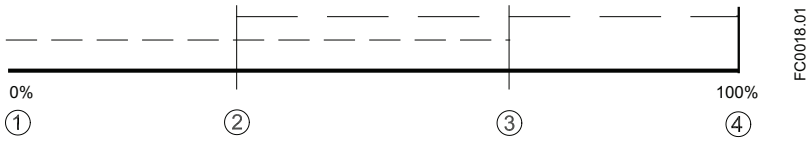

① Open secondary valve
② Open primary valve
③ Close secondary valve
④ Close primary valve

- Control valve:
  Dosing controlled by an analog valve configured in three stages as fully open (high flow), partially open, and fully closed. During the open stage the valve may be not fully open but controlled to a high flow condition.

Valve control parameter configured in each recipe	Default value	Description
Fully Closed Current Level	0 mA	The output current which defines the closed valve state
Partial Open Current Level	10 mA	The output current which defines the partially open valve state
Fully Open Current Level	20 mA	The output current which defines the high flow valve state
Fully Open	0.00 % of Amount	The quantity or percent of amount at which the valve will transition from partial to full flow
Partially Closed	100.00 % of Amount	The quantity or percent of amount at which the valve will transition from full flow to partial flow

Three-positional Control valve configured in recipe 1

Parameter configuration:

Menu 2.5 Dosing

2.5.1 Dosing Mode = Control valve

Menu 2.5.4.5 Valve Control

2.5.4.5.1 Stage Setup Format = Relative

2.5.4.5.6 Fully Closed Current Level = 0 mA

2.5.4.5.7 Partial Open Current Level = 10 mA

2.5.4.5.8 Fully Open Current Level = 20 mA

2.5.4.5.9 Fully Open = 35 %

2.5.4.5.10 Partially Closed = 65 %

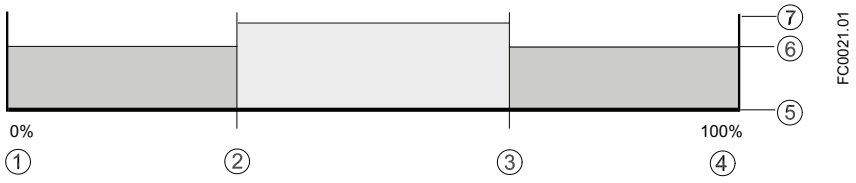

① Partially open valve
② Fully open valve (35%)
③ Partially open valve (65%)
④ Fully closed valve
⑤ No flow
⑥ Partial flow
⑦ Full flow

9.2.8.3 Dosing operation

When the transmitter recipes have been configured, the active recipe is selected in parameter 2.5.3 "Active Recipe". The transmitter output changes according to the dosing operation and controls the valve in the dosing process. The digital input can be configured to start dosing. HMI provides dosing control via the dosing operating view, see Menu item 2.5: Dosing (Page 263). All dosing setup and control can be performed via bus communication using SIMATIC PDM.

Dosing compensation

In static applications the flowrate is constant. Thus, the dosing compensation, if required, is fixed. Use the fixed compensation by entering the amount in menu item 2.5.5.5.2 (Fixed Compensation).

9.2.8.4 Fault handling

The transmitter fault handling provides monitoring of both dosing time and amount. The configuration of the fault handling is done in menu 2.5.4.6 Fault Handling.

Dosing timeout monitoring

The dosing timeout monitoring checks whether the dosing procedure has been finished within the configured Duration Time (menu item 2.5.5.7.2 for Recipe 1). If the duration time is exceeded, an alarm will be triggered, see Fault codes and corrective actions (Segment display) (Page 179).

Dosing overrun monitoring

The dosing overrun monitoring checks if the flow amount exceeds the defined Overrun Value (menu item 2.5.5.7.3 for Recipe 1). If the overrun value is exceeded, an alarm will be triggered, see Fault codes and corrective actions (Segment display) (Page 179).

This function can detect a valve malfunction (non-closure) caused by a blockage, wear, etc.

9.2.9 Audit trail logging

The audit trail includes any values or settings changed by users. The audit trail is automatically stored with information on the change as well as the time (real-time) and by which interface (display, bus communication or USB) the change was made.

Audit trail information is logged on the SensorFlash card, as a parameter and command change file which include below informations:

- Timestamp
- MODBUS register
- Previous value
- New value
- Data type
- Interface ID

Example: 2017-06-08 13:48:05;9003;73;74;Uint8;HMI

The transmitter can log up to 100 entries in each of the audit trail log lists:

- "Parameter change log" (menu item 3.9.1)
- "Firmware update change log" (menu item 3.9.3)

Each audit trail list can be cleared by the user.

See also "Diagnostic log" (menu item 3.2.2)

9.2.10 Diagnostic log

All unacknowledged diagnostic information are listed in the Diagnostic log menu item 3.2.2

The diagnostic alarm list is default available in operating view 6.

There are two ways to have the alarms removed from the diagnostic list (menu item 3.2.2).

- Manual: The alarm remains in the diagnostic list until the alarm is manually acknowledged (ack.).
  The time of the acknowledgement is shown in the Diagnostic log (menu item 3.2.2) as long as the log is not cleared.
- Auto: The alarm is removed from the Diagnostic log when the cause is removed (going)

9.2.11 Custom unit

Units can be defined/customized for all process values. This function can be used if the wanted unit cannot be found in the list of units.

Custom unit is defined under each process value, and is available for mass flow, volume flow, standard volume flow, density, fraction and medium temperature. Custom units menu is not available in Custody transfer mode (CT).

9.2.12 SensorFlash

SensorFlash is a high-performance micro SD card (4 GB) with the ability to be updated by inserting it in a PC. It is supplied with each sensor with the complete set of certification documents including a calibration report. Material, pressure test, factory testing and order conformance certificates are optional at ordering.

Further is contains parameter backup files, firmware logs, alarm history log, parameter change log and data logging of process values and parameters.

The Siemens SensorFlash memory unit offers a permanent database with backup of all parameter settings.

The SensorFlash supports copy and transfer of user settings from one flowmeter to another to simplify commissioning. Only setup parameters are copied; no data are changed in the receiving flowmeter.

Copying application setup from one device to another.

1. Remove the SensorFlash from the source device and insert the SensorFlash into the destination device. The destination device disables the backup and signals an alarm.
2. Enter menu item **Copy setups** (1.8), select OK and press ▷ to execute the copying and move all the application setup parameters from the SensorFlash to the device. Backup is still disabled and alarm signaled.
3. Remove the SensorFlash from the destination device and insert the original SensorFlash. The device synchronizes the parameters to the SensorFlash and the alarm is cleared.
4. If there is no SD-card inserted: Insert SD-Card with backup data. Press right key to continue…

5. Please wait…
6. Copy/restore parameterization - succeeded. Press right key to continue…
   Or:
   Copy/restore parameterization - failed. Press right key to continue…

9.2.13 Datalogging on sensorFlash

Datalogging of process values can be activated under menu items 3.7 - SensorFlash

Data logging can be selected in different logging intervals for Process values and for advanced logging of parameters.

Values with timestamp information is stored on the SensorFlash

9.2.14 Process peak values on sensorFlash

Process peak values can be activated under menu items 3.5 - peak values

Minimum and maximum process peak value is stored with timestamp information on the SensorFlash, and also under menu items 3.5

9.2.15 Simulation

Simulation is used for testing purposes, typically for checking that the readings of the control system are correct.

The simulation can be activated in HMI (menu item 3.8) or via SIMATIC PDM.

Inputs/outputs simulation

Depending on the configuration of each input/output the following values can be simulated:

Table 9-5 Inputs/outputs simulation

HW configuration	Channel 1	Channel 2	Channel 3	Channel 4	Simulation value
Current output	•				4 to 20 mA
Relay output			•	•	0 (low) or 1 (high)
Signal input			•	•	0 (low) or 1 (high)
Signal output • Current • Pulse • Frequency • Status		•	•	•	 • 0 to 25 mA • 0 to 12.5 kHz • 0 to 12.5 kHz • 0 (low) or 1 (high)

Process value simulation

The following process values can be simulated:

- Mass flow
- Volume flow
- Standard Volume flow
- Density
- Process Media Temperature
- Fraction A %
- Fraction B %

Enabling simulation for the process values sets the simulated value for all outputs.

Alarm simulation

It is possible to simulate either specific alarms (ID numbers) or alarm classes. The alarm classes are either Siemens or NAMUR depending on the configuration of Alarm Mode, menu item 2.8.11.

Any simulated alarms will be time-stamped 1900-01-01 00:00 if the alarms have not previously appeared as real alarms. Any real alarms will be time-stamped with the actual date and time of each alarm occurrence.

All alarms mentioned in Diagnostics and troubleshooting (Page 175) can be simulated; except ID 51 (Malfunction in Pickup Amplitude) and ID 165 (Ref. density simulated).

9.2.16 Maintenance

- Set Date and Time
  The device has a built-in real-time clock used for time stamps of various events (for example alarms and configuration changes). The date and time can be set in menu item 2.7.2.
- Set To Default
  The device can be reset to its default settings in menu item 3.11.1.
- Restart Device
  The device can be restarted without disconnecting the power in menu item 3.11.2.

Service and maintenance 10

10.1 Basic safety notes

Note

The device is maintenance-free.

The device is maintenance-free. However, a periodic inspection according to pertinent directives and regulations must be carried out.

An inspection can include check of:

- Ambient conditions
- Seal integrity of the process connections, cable entries, and cover screws
- Reliability of power supply, lightning protection, and grounds

WARNING

Dust layers above 5 mm

Risk of explosion in hazardous areas.

Device may overheat due to dust build up.

- Remove dust layers in excess of 5 mm.

WARNING

Leaks in the sample gas path

Risk of poisoning.

When measuring toxic process media, these can be released or collect in the device if there are leaks in the sample gas path.

- Purge the device as described in Commissioning (Page 89).
- Dispose of the toxic process media displaced by purging in an environmentally friendly manner.

WARNING

Use of a computer in a hazardous area

If the interface to the computer is used in the hazardous area, there is a risk of explosion.

- Ensure that the atmosphere is explosion-free (hot work permit).

CAUTION

Releasing button lock

Improper modification of parameters could influence process safety.

- Make sure that only authorized personnel may cancel the button locking of devices for safety-related applications.

NOTICE

Penetration of moisture into the device

Device damage.

- Make sure when carrying out cleaning and maintenance work that no moisture penetrates the inside of the device.

10.2 Recalibration (if applicable to device)

10.3 Cleaning

Cleaning the enclosure

- Clean the outside of the enclosure with the inscriptions and the display window using a cloth moistened with water or a mild detergent.
- Do not use any aggressive cleansing agents or solvents, e.g. acetone. Plastic parts or the painted surface could be damaged. The inscriptions could become unreadable.

WARNING

Electrostatic charge

Risk of explosion in hazardous areas if electrostatic charges develop, for example, when cleaning plastic surfaces with a dry cloth.

- Prevent electrostatic charging in hazardous areas.

NOTICE

Improper cleaning of diaphragm

Device damage. The diaphragm can be damaged.

- Do not use sharp or hard objects to clean the diaphragm.

10.4 Maintenance and repair work

WARNING

Impermissible repair of the device

- Repair must be carried out by Siemens authorized personnel only.

WARNING

Impermissible repair and maintenance of the device

- Repair and maintenance must be carried out by Siemens authorized personnel only.

WARNING

Impermissible repair of explosion protected devices

Risk of explosion in hazardous areas

- Repair must be carried out by Siemens authorized personnel only.

WARNING

Maintenance during continued operation in a hazardous area

There is a risk of explosion when carrying out repairs and maintenance on the device in a hazardous area.

- Isolate the device from power.

- or -

- Ensure that the atmosphere is explosion-free (hot work permit).

WARNING

Impermissible accessories and spare parts

Risk of explosion in areas subject to explosion hazard.

- Only use original accessories or original spare parts.
- Observe all relevant installation and safety instructions described in the instructions for the device or enclosed with the accessory or spare part.

WARNING

Humid environment

Risk of electric shock.

- Avoid working on the device when it is energized.
- If working on an energized device is necessary, ensure that the environment is dry.
- Make sure when carrying out cleaning and maintenance work that no moisture penetrates the inside of the device.

CAUTION

Hot surfaces

Risk of burns during maintenance work on parts having surface temperatures exceeding 70 °C (158 °F).

- Take corresponding protective measures, for example by wearing protective gloves.
- After carrying out maintenance, remount touch protection measures.

CAUTION

Hot parts in the device

Temperatures that can burn unprotected skin may be present for some time after the device has been switched off.

- Observe the waiting time specified in Technical data (Page 191) or on the device before starting with maintenance work.

WARNING

Enclosure open

Risk of explosion in hazardous areas as a result of hot components and/or charged capacitors inside the device.

To open the device in a hazardous area:

1. Isolate the device from power.
2. Observe the wait time specified in Technical data (Page 191) or on the warning sign before opening the device.
3. Visually inspect sensor inlet and outlet.

Exception: Devices exclusively having the type of protection "Intrinsic safety Ex i" may be opened in an energized state in hazardous areas.

CAUTION

Hazardous voltage at open device

Risk of electric shock when the enclosure is opened or enclosure parts are removed.

- Before you open the enclosure or remove enclosure parts, de-energize the device.
- If maintenance measures in an energized state are necessary, observe the particular precautionary measures. Have maintenance work carried out by qualified personnel.

WARNING

Hot, toxic or corrosive process media

Risk of injury during maintenance work.

When working on the process connection, hot, toxic or corrosive process media could be released.

- As long as the device is under pressure, do not loosen process connections and do not remove any parts that are pressurized.
- Before opening or removing the device ensure that process media cannot be released.

WARNING

Improper connection after maintenance

Risk of explosion in areas subject to explosion hazard.

- Connect the device correctly after maintenance.
- Close the device after maintenance work.

Refer to Cable requirements (Page 63).

The device is maintenance-free. However, a periodic inspection according to pertinent directives and regulations must be carried out.

An inspection can include check of:

- Ambient conditions
- Seal integrity of the process connections, cable entries, and cover screws
- Reliability of power supply, lightning protection, and grounds

NOTICE

Repair and service must be carried out by Siemens authorized personnel only.

Note

Siemens defines flow sensors as non-repairable products.

Maintenance information parameters

The basic maintenance information parameters are:

- Current Date and Time
- Operating Time Total
- Operating Time
- Configuration Counter
- Transmitter Hardware Revision
- HMI Hardware Revision
- Sensor Hardware Revision

10.4.1 Service information

Service information is information about the condition of the device used for diagnostics and service purposes.

Service information parameters

The basic service information parameters are:

- Driver Current
- Pickup 1 Amplitude
- Pickup 2 Amplitude
- Sensor Frequency
- Frame Temperature
- Process Media Temperature
- Zero Point Adjustment Auto/Manual
- Zero Point Offset Value
- Manual Zero Point
- Zero Point Standard Deviation

10.5 Replacing the device

If the equipment has been used for measuring corrosive substances there is a risk of chemical burns when disassembling.

CAUTION

Corrosive substances

Risk of chemical burns when replacing the sensor.

The sensor in the device contains corrosive substances that result in burns on unprotected skin.

- Make sure that the sensor enclosure is not damaged when replacing the sensor.
- If contact with the corrosive substances occurs, rinse the affected skin immediately with large amount of water to dilute substance.

10.6 Return procedure

Enclose the bill of lading, return document and decontamination certificate in a clear plastic pouch and attach it firmly to the outside of the packaging.

Required forms

- Delivery note
- Return goods delivery note (http://www.siemens.com/processinstrumentation/returngoodsnote)
  with the following information:
  - Product (item description)
  - Number of returned devices/replacement parts
  - Reason for returning the item(s)
- Decontamination declaration (http://www.siemens.com/sc/declarationofdecontamination)
  With this declaration you warrant "that the device/replacement part has been carefully cleaned and is free of residues. The device/replacement part does not pose a hazard for humans and the environment."
  If the returned device/replacement part has come into contact with poisonous, corrosive, flammable or water-contaminating substances, you must thoroughly clean and decontaminate the device/replacement part before returning it in order to ensure that all hollow areas are free from hazardous substances. Check the item after it has been cleaned. Any devices/replacement parts returned without a decontamination declaration will be cleaned at your expense before further processing.

10.7 Disposal

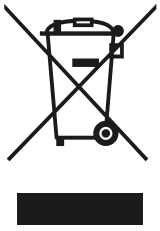

Devices described in this manual should be recycled. They may not be disposed of in the municipal waste disposal services according to the Directive 2012/19/EC on waste electronic and electrical equipment (WEEE).

Devices can be returned to the supplier within the EC, or to a locally approved disposal service for eco-friendly recycling. Observe the specific regulations valid in your country.

Further information about devices containing batteries can be found at: Information about battery / product return (WEEE) (https://support.industry.siemens.com/cs/document/109479891/)

Note

Special disposal required

The device includes components that require special disposal.

- Dispose of the device properly and environmentally through a local waste disposal contractor.

10.8 Ordering of spare parts

Ensure that your ordering data is not outdated. The latest ordering data is always available on the Internet: Catalog process instrumentation (http://www.siemens.com/processinstrumentation/catalogs)

10.9 Ex approved products

Note

Repair of Ex-approved products

It is the customer's responsibility that repair of Ex-approved products fulfill national requirements.

Diagnostics and troubleshooting 11

11.1 Communication troubleshooting

11.2 Device status symbols

11.2.1 Device status symbols (Graphical display)

Device status is shown using symbols and text on the local display. Additionally, the symbol and respective text message for each device status can be seen in remote engineering, asset management or process control systems.

Messages are shown on the display.

- In the operation view, alarms are shown as a combination of symbol and text in the lower line of the display. If several diagnostic messages are active at the same time, the most critical is shown.
- In the alarm list view all active alarms are shown as a list. The alarm list combines a symbol, text and an alarm ID number. The alarms are arranged according to the alarm ID numbers. The alarm list view can also be accessed via parameter "Active diagnostic events".
- In the alarm history view the most recent alarms (up to 100) are listed. The alarm history log can be viewed in parameter "Diagnostic log". The alarm history log can be reset in parameter "Reset log".

Device status characteristics

The following table provides possible cause of device status, and actions for the user or service.

The device provides two types of alarm formats; symbols used on the local display are based on NAMUR status signals or Siemens standard alarm classes, selected in parameter "Status icons".

In SIMATIC PDM, symbols are based on Siemens standard alarm classes.

Note

Device status priority conflict - Namur vs Siemens standard

When more than one diagnostic event is active simultaneously, a conflict in priorities may arise. In this case, the Namur symbol on the local display will differ from that shown in SIMATIC PDM.

- For example: if both diagnostic states "Maintenance demanded", and "Configuration error" are active
  - Local display (using Namur symbols) will show "Configuration error" as higher priority
  - SIMATIC PDM (using Siemens standard symbols) will show "Maintenance demanded" as higher priority

Be aware of the priority for each device status, depending on the interface used.

Note

Namur device status priorities

This device uses Namur device status priorities based on HCF specification.

The sequence of symbols in the table corresponds to the priority of the device status, beginning with the most critical.

11.2.2 Device status symbols (chart)

Device status symbols

Local display - NAMUR NE 107			NAMUR - HCF	Local display - Siemens standard			SIMATIC PDM/PLC		
Symbol	Device status	Priority *	Priority *	Symbol	Device status	Priority **	Symbol	Device status	Priority **
	Failure	1	1		Maintenance alarm	1		Maintenance alarm	1
Cause: Output signal invalid due to malfunction in the field device or its peripherals. **Action:** Maintenance is required immediately.									
	Maintenance required	3	4		Maintenance demanded	2		Maintenance demanded	2
Cause: Output signal is still valid but wear reserve is nearly exhausted, or a function will soon be restricted. **Action:** Maintenance is strongly recommended as soon as possible.									
	Maintenance required	3	4		Maintenance required	3		Maintenance required	3

Local display - NAMUR NE 107			NAMUR - HCF	Local display - Siemens standard			SIMATIC PDM/PLC		
Symbol	Device status	Priority *	Priority *	Symbol	Device status	Priority **	Symbol	Device status	Priority **
Cause: Output signal is still valid. No functional restriction has been detected but wear reserve is expected in the next weeks. **Action:** Maintenance of device should be planned.									
	Function check	2	2		Manual operation	4		Manual operation	4
Cause: Output signal temporarily invalid (e.g. frozen) due to ongoing work on the device. **Action:** Disable manual mode via HMI or engineering system.									
	Function check	2	2		Simula-tion mode	5		Simula-tion mode	5
Cause: Output signal temporarily does not represent the process because output based on a simulation. **Action**: Disable simulation mode via HMI or engineering system or restart device.									
	Failure	1	1		Out of service	6		Out of service	6
Cause: Output signal does not represent process value. Device mode is set to "Out of service". **Action:** Disable “Out of service” and activate normal operation mode.									
	Failure	1	1		Configura-tion error	7	(red)	Configura-tion error	7
Cause: Output signal invalid due to a parameter setting, an interconnection error or a configuration error in HW. **Action:** Check device hardware configuration or parameter settings via HMI or engineering system.									
	Out of specifica-tion	4	3		Process value alarm	8		Process value alarm	8
Cause: Deviations from permissible ambient or process conditions determined by device (through self-monitoring, or faults in device) indicate that measurement is uncertain, or deviations from set value in actuators is probably greater than expected under normal operating conditions. Process or ambient conditions will damage device or result in uncertain output. **Action:** Check ambient temperature or process conditions. If possible, relocate device.									
	Function check	2	2		Configura-tion warn-ing	9	(yellow)	Configura-tion warn-ing	9
Cause: Safety validation is not completed. **Action:** Acknowledge safety event in menu Functional Safety and repeat the safety commissioning.									

Local display - NAMUR NE 107			NAMUR - HCF	Local display - Siemens standard			SIMATIC PDM/PLC		
Symbol	Device status	Priority *	Priority *	Symbol	Device status	Priority **	Symbol	Device status	Priority **
	Out of specification	4	3		Process value warning	10		Process value warning	10
Cause: Deviations from permissible ambient or process conditions determined by device (through self-monitoring, or warnings in device) indicate that measurement is uncertain, or deviations from set value in actuators is probably greater than expected under normal operating conditions. Process or ambient conditions could damage device or result in uncertain output. **Action:** Check ambient temperature or process conditions. If possible, relocate device.									
no icon shown					Process value tolerance	11		Process value tolerance	11
Cause: **Action:**									
no icon shown				no icon shown	Configuration changed	12	no icon shown	Configuration changed	12
Cause: An operation was performed that changed the device's configuration. **Action:**									
no icon shown	Good - OK			no icon shown	no assignment	13	no icon shown	no assignment	13
Cause: **Action:**									

* Lowest priority number equals highest fault severity.

** Both the Siemens standard symbol and its corresponding Namur symbol (from device display) will be shown in SIMATIC PDM.

11.3 Fault codes and corrective actions (Segment display)

In the following table the diagnostic message IDs are listed along with possible causes and directions for corrective action.

ID	Symbols	Message	Cause/action
A0		Event counter 1 Number overruns above threshold Maintenance alarm	The number of overruns of the process value (set in parameters "Upper limit" and "Monitored value") has reached the threshold. Reset and acknowledge event counter. Check process conditions. Check limit monitoring and event counter settings.
A1		Event counter 1 Number underruns above threshold Process alarm	The number of underruns of the process value (set in parameters "Lower limit" and "Monitored value") has reached the threshold. Reset and acknowledge event counter. Check process conditions. Check limit monitoring and event counter settings.
A2		Event counter 1 Number underruns above threshold Maintenance required	The number of underruns of the process value (set in parameters "Lower limit" and "Monitored value") has reached the threshold. Reset and acknowledge event counter. Check process conditions. Check limit monitoring and event counter settings.
A3		Event counter 1 Number overruns above threshold Maintenance alarm	The number of overruns of the process value (set in parameters "Upper limit" and "Monitored value") has reached the threshold. Reset and acknowledge event counter. Check process conditions. Check limit monitoring and event counter settings.
A4		Event counter 2 Number overruns above threshold Process alarm	The number of overruns of the process value (set in parameters "Upper limit" and "Monitored value") has reached the threshold. Reset and acknowledge event counter. Check process conditions. Check limit monitoring and event counter settings.
A6		Event counter 2 Number overruns above threshold Maintenance required	The number of overruns of the process value (set in parameters "Upper limit" and "Monitored value") has reached the threshold. Reset and acknowledge event counter. Check process conditions. Check limit monitoring and event counter settings.
A7		Event counter 2 Number overruns above threshold Maintenance alarm	The number of overruns of the process value (set in parameters "Upper limit" and "Monitored value") has reached the threshold. Reset and acknowledge event counter. Check process conditions. Check limit monitoring and event counter settings.
A8		Event counter 2 Number underruns above threshold Process alarm	The number of underruns of the process value (set in parameters "Lower limit" and "Monitored value") has reached the threshold. Reset and acknowledge event counter. Check process conditions. Check limit monitoring and event counter settings.

ID	Symbols	Message	Cause/action
A9		Event counter 2 Number underruns above threshold Maintenance required	The number of underruns of the process value (set in parameters "Lower limit" and "Monitored value") has reached the threshold. Reset and acknowledge event counter. Check process conditions. Check limit monitoring and event counter settings.
AA		Device lifetime: maintenance demanded	Forthcoming end of configured device's lifetime. Maintenance is strongly recommended as soon as possible.
Ab		Device lifetime: maintenance required	Forthcoming end of configured device's lifetime. Maintenance of device should be planned.
AC		Sensor lifetime: maintenance demanded	Forthcoming end of configured sensor's lifetime. Maintenance is strongly recommended as soon as possible.
AD		Sensor lifetime: maintenance required	Forthcoming end of configured sensor's lifetime. Maintenance of device should be planned.
AE		Service: maintenance demanded	Forthcoming end of the configured service interval. Maintenance is strongly recommended as soon as possible.
AF		Service: maintenance required	Forthcoming end of the configured service interval. Maintenance of device should be planned.
AG		Calibration: maintenance demanded	Forthcoming end of the calibration interval. Maintenance is strongly recommended as soon as possible.
AH		Calibration: maintenance required	Forthcoming end of the calibration interval. Maintenance of device should be planned.

ID	Symbols	Message	Cause/action
AJ		Limit monitoring 1 Above limit	Monitored value is above limit (set in parameter "Upper limit").
AL		Limit monitoring 1 Below limit	Monitored value is below limit (set in parameter "Lower limit").
An		Limit monitoring 2 Above limit	Monitored value is above limit (set in parameter "Upper limit").
Ao		Limit monitoring 2 Below limit	Monitored value is below limit (set in parameter "Lower limit").
AP		Limit monitoring 3 Above limit	Monitored value is above limit (set in parameter "Upper limit").
Ar		Limit monitoring 3 Below limit	Monitored value is below limit (set in parameter "Lower limit").
AU		Event counter 1 Number overruns above threshold Process alarm	The number of overruns of the process value (set in parameters "Upper limit" and "Monitored value") has reached the threshold. Reset and acknowledge event counter. Check process conditions. Check limit monitoring and event counter settings.
AY		Event counter 1 Number overruns above threshold Maintenance required	The number of overruns of the process value (set in parameters "Upper limit" and "Monitored value") has reached the threshold. Reset and acknowledge event counter. Check process conditions. Check limit monitoring and event counter settings.
b0		Event counter 3 Number underruns above threshold Process alarm	The number of underruns of the process value (set in parameters "Lower limit" and "Monitored value") has reached the threshold. Reset and acknowledge event counter. Check process conditions. Check limit monitoring and event counter settings.

ID	Symbols	Message	Cause/action
b1		Event counter 3 Number underruns above threshold Maintenance required	The number of underruns of the process value (set in parameters "Lower limit" and "Monitored value") has reached the threshold. Reset and acknowledge event counter. Check process conditions. Check limit monitoring and event counter settings.
b2		Event counter 3 Number underruns above threshold Maintenance alarm	The number of underruns of the process value (set in parameters "Lower limit" and "Monitored value") has reached the threshold. Reset and acknowledge event counter. Check process conditions. Check limit monitoring and event counter settings.
bE		Out of service	Output signal does not represent process value. Device mode is set to "Out of service". Repair is required. Contact Technical support.
bL		Watchdog reset performed	Watchdog function has detected an internal device error. Restart the device. If the problem persists, contact Technical support.
bn		Alarm sensor limit exceeded	Process value has reached the sensor limit. Review process conditions versus product specifications.
bS		Event counter 2 Number underruns above threshold Maintenance alarm	The number of underruns of the process value (set in parameters "Lower limit" and "Monitored value") has reached the threshold. Reset and acknowledge event counter. Check process conditions. Check limit monitoring and event counter settings.
bt		Event counter 3 Number overruns above threshold Process alarm	The number of overruns of the process value (set in parameters "Upper limit" and "Monitored value") has reached the threshold. Reset and acknowledge event counter. Check process conditions. Check limit monitoring and event counter settings.
bU		Event counter 3 Number overruns above threshold Maintenance required	The number of overruns of the process value (set in parameters "Upper limit" and "Monitored value") has reached the threshold. Reset and acknowledge event counter. Check process conditions. Check limit monitoring and event counter settings.
bY		Event counter 3 Number overruns above threshold Maintenance alarm	The number of overruns of the process value (set in parameters "Upper limit" and "Monitored value") has reached the threshold. Reset and acknowledge event counter. Check process conditions. Check limit monitoring and event counter settings.

ID	Symbols	Message	Cause/action
CA		Simulation mode	The device is in simulation mode and one or more of its device variables are not representative of the process. Disable the simulation to return to normal operation.
Cb		Diagnostics simulated	The device is in simulation mode. Disable the simulation to return to normal operation.
Co		Loop current fixed	The loop current is being held at a fixed value and is not responding to process variations. Enter the loop current output value for simulation. Disable the simulation to return to normal operation.
CP		Loop current saturated	The loop current has reached its upper (or lower) saturation limit and cannot increase (or decrease) any further. Adjust loop current scaling.
CU		PV status: uncertain	The value is outside of the physical sensor range. Accuracy may decrease. Parameter "Fail-safe loss of echo" is set to "Hold", and device is in loss of echo (LOE), or limit is set for a negative level value, and that value is exceeded. Check for changes in process conditions or obstructions in vessel.
CY		PV status: bad	The measured value is 10% higher than the physical sensor range. Review process conditions versus product specifications. Use a device that fulfills your process conditions.
Fb		Supply voltage below limit	The supply voltage is too low. Make sure input voltage is within product specification.
FC		Supply voltage above limit	The supply voltage is too high. Make sure input voltage is within product specification.
FE		Loop current read back error	The loop current does not correspond to the expected value. Check DAC trim settings. Restore to factory DAC calibration. If the problem persists, contact Technical support.
FJ		Environmental conditions out of range	Uncertain values due to process conditions. Check installation for abnormal operating conditions.

ID	Symbols	Message	Cause/action
Fn		Connection failure to sensor subsystem	Potential product damage. Restart the device. If error continues, sensor subsystem may have a defect. Repair is required. Contact Technical support.
Fo		Sensor break	Potential product damage. Sensor has malfunctioned. A replacement of sensor is recommended. Contact Technical support.
Fr		Internal power supply conditions out of range	The internal power supply is outside its allowable range. A replacement of the device is recommended. Contact Technical support.
FS		Electronics defect	Defect of device electronics. A replacement of the device is recommended. Contact Technical support.
SA		Non-volatile memory check failure	Device electronics error. Restart the device. If error continues, device electronics may have a defect. Repair is required. Contact Technical support.
Sb		Volatile memory check failure	Device electronics error. Restart the device. If error continues, device electronics may have a defect. Repair is required. Contact Technical support.
SC	(red)	Invalid device configuration	One or more of parameters are set to invalid values. Review configuration values and adjust as necessary.
Sd		Sensor fail-safe timer expired	Sensor is in fail-safe mode and timer has expired, based on value set in parameter "Fail-safe LOE timer". Check for changes in process conditions or obstructions in vessel.

ID	Symbols	Message	Cause/action
St		Safety validation mode	Device is in safety validation mode. Complete function test and confirm function test passed in Functional Safety wizard.
SU		Safety critical device error	Acknowledge safety critical error in Functional Safety wizard (via HMI or remote operation). Restart Functional Safety wizard. If problem persists, contact Technical support.

11.4 Operation troubleshooting

11.4.1 How do I copy application setup from one device to another?

1. Remove the SensorFlash from the source device and insert the SensorFlash into the destination device. The destination device disables the backup and signals an alarm.
2. Enter menu item 3.3.1 Copy configuration, select "OK" and press ▷ to execute the copying and move all the application setup parameters from the SensorFlash to the device. Backup is still disabled and alarm signaled.
3. Remove the SensorFlash from the destination device and insert the original SensorFlash. The device synchronizes the parameters to the SensorFlash and the alarm is cleared.

11.4.2 Troubleshooting sensor-related problems

Incorrect and unstable measurements, especially at low flows, are typically a result of an unstable zero point due to:

- Incorrect installation
- Bubbles in the liquid
- Vibrations/Cross talk
- Solid particles settling in the liquid

In the following a 4-step guide to troubleshooting is provided:

Step 1	Preliminary application inspection
Step 2	Zero point adjustment
Step 3	Measurement error calculation
Step 4	Application improvement

The guide will enable you to trace the reason for incorrect measurements and to improve the application.

Step 1: Inspecting the application

Ensure that:

1. The sensor is installed as described in Installing/mounting.
2. The sensor is located in a vibration-free position. Vibrations can disturb the sensor and therefore cause measurement error.

Depending on application, you should furthermore ensure the following:

- Liquid application
  Ensure that the sensor is filled with liquid and liquid only.
  Air or gas bubbles in the liquid cause instability and can result in measurement errors.
  Flush the pipe systems and the sensor for several minutes at maximum flowrate to remove any air bubbles which may be present.

  Note

  The liquid must be homogeneous in order to measure with high accuracy. If the liquid contains solid particles of greater density than the liquid, then these solids can settle, especially at low flow rates, which will cause instability in the sensor and lead to measurement errors.

  For pastes or process fluids with suspended solids always orient the sensor vertically with flow in upward direction to maintain solids suspension.

- Gas application
  Ensure that the gas pressure/temperature conditions contain sufficient superheat to prevent dewing or precipitation. If the gas contains vapor or droplets then these may precipitate, causing instability.

Step 2: Performing a zero point adjustment

The second step in the troubleshooting procedure is to zero point adjust the device. For further information on zero point adjustment, see Commissioning (Page 89).

11.4.2.1 Step 3: Calculating the measurement error

Step 3: Calculating the measurement error

The result of the zero point adjustment will show you if the zero point was set under good and stable conditions.

The lower the obtained value of the parameter **Zero Point Standard Deviation**, the lower is the achievable measuring error. For a well-installed flowmeter, the Zero Point Standard Deviation corresponds to the specified zero point stability for the sensor size, see Performance (Page 191).

The parameter **Zero Point Standard Deviation** is located in the **Maintenance & Diagnostics** menu in the SIMATIC PDM.

Calculating the measurement error

- The error curve is plotted from the formula:

$$E = \pm\sqrt{(Cal)^2 + \left(\frac{z \times 100}{qm}\right)^2}$$

E = Error [%]
Z = Zero point [kg/h]
qm = Mass flow [kg/h]
Cal. = Calibrated flow accuracy: 0.10 or 0.2

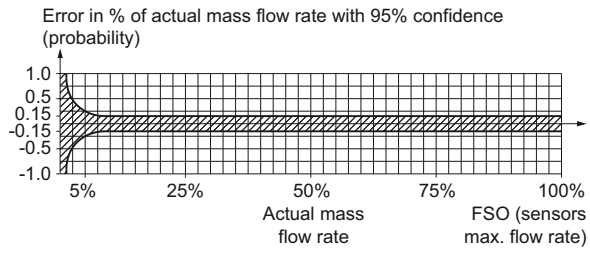

Table 11-1 **Reference conditions for flow calibrations (ISO 9104 and DIN/EN 29104)**

Flow conditions	Fully developed flow profile
Temperature, medium	20 °C ± 2 °C (68 °F ± 3.6 °F)
Temperature, ambient	20 °C ± 2 °C (68 °F ± 3.6 °F)
Liquid pressure	2 ± 1 bar
Density	0.997 g/cm3
Brix	40 °Brix
Supply voltage	Un ± 1 %
Warming-up time	30 min.
Cable length	5 m between transmitter and sensor

Table 11-2 **Additions in the event of deviations from reference conditions**

Current output	As pulse output ± (0.1% of actual flow +0.05 % FSO)
Effect of ambient temperature	• Display/frequency/pulse output: < ± 0.003%/K act. ± 3.6 °F) • Current output: < ± 0.005 %/ K act.
Effect of supply voltage	< 0.005 % of measuring value on 1 % alteration

Step 4: Improving the application

In the following it is described how to find the causes of a high Zero Point Standard Deviation and how to improve the installation.

Setting Low Flow Cut-Off

In order to see if the zero point becomes more stable when making changes / adjustments, the Low Mass Flow Cut-Off (MassFlowCutOff) must be set to 0.0 kg/s.

When Low Flow Cut-Off has been set, it is possible to see the instability directly from the massflow in the online window ("View → Process variables")

This information can be used to troubleshoot. For example, tightening the brackets which hold the sensor, or turning off the pump to check if vibrations from the pump are disturbing the sensor, etc.

Incorrect installation of the sensor

- Has the sensor been correctly installed, that is fastened to the floor / wall or frame with good mounting brackets as shown in the instructions?

Especially for low flowrates, that is flowrates less than 10% of the maximum capacity of the flow meter, it is important that the sensor is correctly and stably installed.

If the sensor is not correctly fixed in place, the zero point of the sensor will change, leading to measuring errors.

Try to tighten up the sensor brackets to see whether the flow instability is reduced.

Vibrations and cross talk

Vibrations in the pipe system are normally generated by pumps.

Typically, cross talk is generated by two sensors of identical size and positioned in close proximity in the same pipe, or installed on the same rail or frame.

Vibrations / cross talk have a greater or lesser effect upon the zero point stability and therefore also the measurement accuracy.

1. Check whether there are vibrations.
   Turn off the pump and check whether the zero point stability improves, that is if the flowrate fluctuation in kg/h is reduced.
   If the sensor is disturbed by vibration from the pump or by pressure pulsations, the installation should be improved or the pump should be exchanged, for example to another type.
2. Check for cross talk.
   Turn off the power to the other flow meter(s) and wait approximately 2 minutes, so the vibrating tubes in the sensor have stopped vibrating. Then check if the zero point stability has improved, that is that the fluctuation in kg/h has been reduced. If this is the case, the sensors disturb one another and the installation should be improved.

Air in the liquid

When air is present in the liquid, the zero point becomes unstable, which leads to a poor measurement accuracy.

Checking for air:

- Check the Driver Current (View → Device Diagnostics → Advanced Diagnostic)
- Check if the Driver Current varies more than ±1 mA. If this is the case, it is usually due to the presence of air or gas bubbles in the liquid.
- Increase the pressure in the sensor, creating a large back pressure upon the sensor by reducing the opening of the outlet valve or by increasing the pump pressure. Thereby the size of air bubbles inside the sensor will be minimized. If the Driver Current value increases and/or the stability of the Driver Current decreases, it is proof that the liquid contains air or gas bubbles.

Typical causes of air in the liquid

- The entry pipe and sensor have not been properly filled with liquid.
- The pump cavitates, the rotary speed of the pump is too high in relation to the supply of liquid to the pump.
- The flow rate in the pipe is too high, so components sitting in front of the flowmeter can cause cavitation.
- If there is a filter installed before the flowmeter, it may be close to blocking, which also can cause cavitation.
- Liquid flashes to vapor bubbles while passing through partially open valves or orifices.
- The piping on the pump suction side, pump gaskets or the pump itself is not tight. Air gets sucked into the system due to a low pressure on the pump suction side.
- The piping on the pump suction side, pump gaskets or the pump itself is not tight. Air gets sucked into the system due to a low pressure on the pump suction side.

Solid particles in the liquid

If the solid particles in a liquid have a density higher than that of the liquid, they can precipitate inside the sensor and cause instability which leads to a measurement error.

If solid particles are present in the liquid, they must be homogeneously distributed and have similar density as the liquid. Otherwise they can cause relatively large measurement errors.

It is important that the sensor is installed such that solid particles can easily run out of the sensor.

1. Ensure that the sensor is installed vertically with an upwards flow.
2. Check if solid particles are present in the liquid:
   Take a sample of the liquid, fill a glass and see if the solids precipitate.

11.4.3 How do I update the firmware?

1. Download the new firmware bundle from (www.siemens.com/FC430) and save it to the SensorFlash. An instruction is also available at this site.
2. Access the flowmeter with access level Expert (the default PIN code is 2834).
3. Enter menu item 3.1.2 (FW Update), select the saved firmware bundle version and press ▷. The firmware update progress is shown in the display.

Note

Firmware update

FW update is to be done only by authorized and trained service personnel.

Technical data

12

Note

Device specifications

Siemens makes every attempt to ensure the accuracy of these specifications but reserves the right to change them at any time.

12.1 Power

Table 12-1 Power supply

Description	Specification
Supply voltage	• 100 to 240 V AC, 47 to 63 Hz 30 VA • 19,2 - 28,8 V DC 11 W
Environmental conditions:	• Transient over voltages up to the levels of overvoltage category II • Temporary over voltages occurring on mains supply only • POLLUTION DEGREE 2. • MAINS AC supply voltage fluctuations up to ±10 % of the nominal voltage. • Altitude up to 2 000 m
Reverse polarity protection (y / n)	Y
Galvanic isolation	2500 V AC

12.2 Performance

Table 12-2 Reference conditions

Description	Specification
Process media	Water
Process media temperature	20 °C (68 °F)
Ambient temperature	25 °C (77 °F)
Process media pressure	2 bar (29 psi)
Process media density	0.997 g/cm^3 (62.2 lb/ft^3)
Reference device orientation	Horizontal installation, tubes down, flow in direction of arrow on casing, see Installing/Mounting.

Table 12-3 Massflow accuracy

Description	Specification					
Sensor size	DN15	DN25	DN50	DN80	DN100	DN150
Qmin - minimum flowrate [kg/h] (lb/min)	20 (0.735)	200 (7.35)	750 (27.6)	900 (33.1)	4160 (153)	6880 (253)
Qnom - nominal flowrate [kg/h] (lb/min)	4400 (163,1)	20220 (742,9)	50560 (1857,7)	132700 (4875,9)	285800 (10501)	459200 (16873)
Qmax - maximum flowrate [kg/h] (lb/min)	8000 (294)	35000 (1286)	90000 (3307)	250000 (9186)	520000 (19107)	860000 (31600)
Max. zero point stability [kg/h]	±0.4	±1.35	±4.5	±20.0	±41.6	±68.8
Measuring accuracy [%]	±0.1	±0.1	±0.1	±0.1	±0.1	±0.1
Repeatability error [%]	±0.05	±0.05	±0.05	±0.05	±0.05	±0.05

Table 12-4 Density accuracy

Description	Specification					
Sensor size	DN15	DN25	DN50	DN80	DN100	DN150
Density accuracy, standard calibration [kg/m³]	±5	±5	±5	±5	±5	±5
Density accuracy, extended calibration [kg/m³]	±0.5	±0.5	±0.5	±0.5	±1	±1
Density repeatability [kg/m³]	±0.25	±0.25	±0.25	±0.25	±0.25	±0.25
Density, media pressure effect [kg/m³]	no effect	±0.35	±0.27	±0.19	±0.24	±0.45
Density, media temperature effect [kg/m³]	±0.1	±0.1	±0.1	±0.1	±0.1	±0.1

Density accuracy, standard calibration =+/- 10Kg/m3

Density accuracy, extended calibration =+/- 2Kg/m3

Table 12-5 Media temperature accuracy

Description	Specification					
Sensor size	DN15	DN25	DN50	DN80	DN100	DN150
Media temperature accuracy [°C]	±1	±1	±1	±1	±/-0,5	±/-0,5
Media temperature repeatability [°C]	±0.25	±0.25	±0.25	±0.25	±/-0,5	±/-0,5

Media temperature repeatability -/+ 0.25 for all sensors

Media temperature accuracy -/+ 0.25 for all sensors

Table 12-6 Additional error by deviations from reference conditions

Description	Specification					
Sensor size	DN15	DN25	DN50	DN80	DN100	DN150
Effect of process pressure [% of actual flowrate per bar]	<-0.002	<-0.013	<-0.01	-0.006	<-0.009	<-0.035

Description	Specification				
Effect of ambient temperature [% / K actual flowrate]	< ±0.003	< ±0.003	< ±0.003	< ±0.003	On request
Display/Frequency/Pulse/Communication output:					
Effect of power supply fluctuations	None				

12.3 Interface

12.3.1 Modbus interface

Table 12-7 Modbus communication

Description	Specification
Protocol version	Modbus RTU
Default transmission rate	19200 bit/s
Default parity	Even
Default device address	1

12.3.2 HART interface

Table 12-8 HART communication

Description	Specification
HART revision	7.5

PROFIBUS interface

Table 12-9 Profibus DP/PA

Description	Specification
Profile version	V4.0 - compatible with version 3
Default transmission rate	Automatic baud rate detection

12.4 Inputs

Table 12-10 Digital input

Description	Channels 3 to 4
Load	15 to 30 VDC, R_{in} 7 kOhm
Functionality	• Start/stop/hold/continue dosing • Reset totalizer 1, 2 or 3 • Reset all totalizers • Freeze output

12.5 Outputs

Table 12-11 Current output (Channel 1)

Description	Channel 1	
Signal range	4 to 20 mA	
Resolution	0.4 µA	
Load	• Ex i: <470 Ω (HART ≥ 230 Ω) • Non-Ex: <770 Ω (HART ≥ 230 Ω)	
Time constant (adjustable)	0.0 to 100 s	
Fault current Measurement range (mA) Lower fault current (mA) Upper fault current (mA)	4 - 20 NAMUR 3.8 - 20.5 3.5 22.6	4 - 20 US 4.0 - 20.8 3.75 22.6
Customized fail-safe mode	• Last reliable value • Lower fault current • Upper fault current • Fail-safe value • Current value	
Galvanic isolation	All inputs and outputs are galvanically isolated PELV circuits with 60 V DC isolation from each other and ground. Maximum test voltage: 500 V AC	
Cable	Standard industrial signal cable with up to 3 twisted pairs with overall screen can be connected between the transmitter and the control system. Individual pair or overall screen is optional depending on user requirements.	
Voltage range	Max. 24 V DC (active) 14 to 30 V DC (passive)	

Table 12-12 Current output (Channels 2 to 4)

Description	Channels 2 to 4					
Signal range	0/4 to 20 mA					
Resolution	0.4 µA					
Load	• Ex i: <470 Ω • Non-Ex: <770 Ω					
Time constant (adjustable)	0.0 to 100 s					
Fault current Measurement range (mA) Lower fault current (mA) Upper fault current (mA)	4-20 NAMUR 3.8 - 20.5 3.5 22.6	4-20 US 4.0 - 20.8 3.75 22.6	4-20 NAMUR 4.0 - 20.5 2.0 22.0	4-20 US 4.0 - 24.0 2.0 25.0	0-20 NAMUR 0.0 - 20.5 0.0 22.0	0-20 US 0.0 - 24.0 0.0 25.0
Customized fail-safe mode	• Last reliable value – Lower fault current – Upper fault current • Fail-safe value • Current value					
Galvanic isolation	All inputs and outputs are galvanically isolated PELV circuits with 60 V DC isolation from each other and ground. Maximum test voltage: 500 V AC					
Cable	Standard industrial signal cable with up to 3 twisted pairs with overall screen can be connected between the transmitter and the control system. Individual pair or overall screen is optional depending on user requirements.					
Voltage range	Max. 24 V DC (active) 14 to 30 V DC (passive)					

Table 12-13 Digital output

Description	Channels 2 to 4
Pulse	41.6 µs to 5 s pulse duration
Resolution	1 µs
Frequency	0 to 12.5 kHz, 50 % duty cycle, 120 % overscale provision
Resolution	0.2 Hz
Load	< 750 Ω
Time constant (adjustable)	0 to 100 s
Active	0 to 24 V DC, 87 mA, short-circuit-protected
Passive	3 to 30 V DC, 100 mA, short-circuit-protected
Functions	• Pulse • Frequency • Alarm class / NAMUR status • Individual alarms

Table 12-14 Relay output

Description	Channels 3 to 4
Type	Change-over voltage-free relay contact
Load	30 V AC, 100 mA
Functions	• Alarm class / NAMUR status • Individual alarms

12.6 Construction

Table 12-15 Designated use

Description	Specification
Measurement of process medium	• Fluid Group 1 (suitable for dangerous fluids) • Aggregate state: Paste/light slurry, liquid and gas

Table 12-16 System design

Description	Specification
Measuring principle	Coriolis
System architecture	Compact configuration Remote configuration

Device design

Table 12-17 Transmitter design

Description	Specification
Dimension and weight	See "Dimensions and weight"
Design	Compact or remote
Material	Aluminum with corrosion-resistant coating
Ingress protection	IP67/NEMA 4X to EN/IEC 60529 (1 mH_2O for 30 min.)
Mechanical load	18 to 1000 Hz random, 3.17 g RMS, in all directions, to IEC 68-2-36

Torques

Table 12-18 Installation torques

Description	Torque (Nm)
Pressure guard fittings G 1/4 inch	 80
Wall bracket screws	10
Transmitter to wall bracket	25

Description		Torque (Nm)
Transmitter pedestal lock screw	Compact version:	10
	Remote version:	6
Pedestal lock screw cap		10
Cable gland to housing (Siemens supplied, metric)		10

Note

NPT glands

When using NPT glands, the user must take care to use the supplied NPT thread adaptors.

12.6.1 Design

12.6.1.1 Sensor design

Sensor design

Table 12-19 Sensor design

Description	Specification
Dimension and weight	See "Dimensions and weight"
Process connectors	• EN1092-1 B1, PN16, PN40, PN63, PN100 • EN1092-1 D (gasket groove), PN40 • ASME B16.5 RF, Cl 150, Cl 300, Cl 600, Cl 900, Cl1500 • ISO 228-1 G * • ASME B1.20.1 NPT * • DIN 11851 Hyg. Screw ** • DIN 32676 (ISO) Clamp Row B * • SMS1145 - Hyg. Screwed • JIS B 2220, 10K, 20K • EN 1092-1 PN 16, PN40, NAMUR length
Electrical connection	• M12 connector with 4-wire cable • Standard cable with polymer / brass / stainless steel cable glands (metric or NPT) • Armored cable with stainless steel armored cable glands (metric or NPT) • Conduit entries (metric or NPT)
Material	
Measuring tubes	• AISI 316L / EN1.4404 • C4 (2.4610) nickel alloy or C22 (2.4602) nickel alloy

Description	Specification
Process connectors	• Standard: – AISI 316L / EN1.4435 or EN1.4404 – C4 (2.4610) nickel alloy or C22 (2.4602) nickel alloy
Sensor enclosure	Stainless steel 1.4404 (AISI 316L), 1.4301 (AISI 304), 1.4308 (ASTM CF8)
DSL enclosure	Aluminum with corrosion-resistant coating
Measuring tube design	Split flow through 2 parallel tubes with combined cross-section area 50% of the nominal pipe The measuring tubes are bent in a trapezoidal curve
Self-draining design	Yes, when mounted vertically

*: Pressure ratings depend on sensor material
**: Pressure ratings depend on process connection dimension

12.6.2 Sensor cable specifications HART

Table 12-20 Sensor cable, basic data

Description	Specification
Number of conductors	4
Square area [mm²]	0.326 (AWG 22/7)
Screen	Yes
Outside color	• Standard version: gray (RAL 7001) • Ex version: light-blue (RAL 5015)
External diameter [mm]	6.5 (standard); 12 (armored)
Maximum length [m (ft.)]	150 (492)
Installation environment	Industrial including chemical processing plants
Insulation material	Special polyolefin
Halogen-free	Yes
RoHS compliant	Yes
Torsional strength	• >3 million cycles at ± 180° on 200 mm • Not adapted for garland mounting (festoon)
Permissible temperature range [°C (°F)]	-40 to +80 (-40 to +176)
Min. bending radius allowed	Single 5 X ø

Table 12-21 Signal cable recommendations

Description	Specification
Square area [mm²]	0.5 (AWG 20)
Linear resistance [Ohm/km]	≤ 120
Max. length [Ohm] (depends on total linear resistance)	< 500

Description	Specification
Signal run time [ns/m]	≤ 5.3
Insulation resistance [MOhm*km]	≥ 200
Characteristic impedance 1 – 100 MHz [Ohm]	100 (±5)
Attenuation @ 1 Mhz	< 2.9 dB/100 m
Operating voltage (peak) [V]	≤ 300
Test voltage (wire/wire/screen rms 50 Hz 1 min) [V]	= 700

Electrical data at reference temperature (20 °C)

Table 12-22 Power supply cable recommendations

Description	Specification
Square area [mm^2]	1.3 (AWG 16)
Max. length [m]	300 (AWG 16)

Note

Size the cable length and diameter to provide 19,2 VDC at power terminals at load current of 0,75 A

Table 12-23 Transmitter cable glands and entries

Description	Specification
Glands	• Material – Nylon[1)] – Brass/Ni plated – Stainless steel AISI 316/1.4404 • Cable cross section – ∅ 8 to 17 mm (0.31" to 0.67") – ∅ 5 to 13 mm (0.20" to 0.51")
Entries	1 x M25 (for current output/communication, channel 1) and 2 x M20 (for supply and channels 2 to 4) or 1 x ½" NPT (for current output/communication, channel 1) and 2 x ½" NPT (for supply and channels 2 to 4)

[1)]: If operating temperature is below -20 °C (-4 °F), use Brass/Ni plated or stainless steel cable glands.

Note

For hygienic applications (EHEDG) the cable glands and blind plugs must be made from corrosion resistant material like nickel brass, stainless steel or plastic, the exposed threads must be minimized when they are tightened up on the cable and they must have a seal (plastic or rubber) under the threads where they screw into the terminal housing or enclosure.

12.7 Operating conditions

Table 12-24 Basic conditions

Description		Specification
Ambient temperature (°C[°F]) (Humidity max. 90 %)	Operation: Transmitter without display Transmitter with display	 -40 to +60 [-40 to +140] -20 to +60 [-4 to +140]
Ambient temperature (°C[°F]) (Humidity max. 90 %)	Storage: Transmitter without display Transmitter with display	 -40 to +70 [-40 to +158] -40 to +70 [-40 to +158]
Climate class		DIN 60721-3-4
Altitude		Up to 2000 m (6560 ft)
Relative humidity [%]		95
EMC performance	• Emission • Immunity	• EN 55011 / CISPR-11 • EN/IEC 61326-1 (Industry) NAMUR NE 21

Table 12-25 Cleaning and sterilizing conditions

Description	Specification
Cleaning method	• CIP • SIP
Cleaning temperature	On request
Cleaning frequency	On request
Cleaning duration	On request

Table 12-26 Process media conditions

Description	Specification
Process media temperature (T_s) (min to max) [°C (F)]	-50 to +205 (-58 to 400)
Process media density (min to max) [kg/m^3 (lb/ft^3]	1 to 5000 (0.06 to 312)
Process media gauge pressure (min to max) [bar (psi)]	0 to 160 (0 to 2321)

Description	Specification
Process media absolute pressure (min to max) [bar (psi)]	Stainless steel: 1 to 101 (14.5 to 1465)
Process media viscosity	Gases and non-compressible liquids
Pressure drop	See "Pressure drop curves"
Pressure temperature ratings	See "Pressure - temperature ratings"

12.8 Process variables

Table 12-27 Process variables

Description	Specification
Primary process variables	• Massflow • Density • Fluid temperature
Derived process variables	• Volumeflow • Corrected volumeflow • Fraction A:B • Fraction % A:B

12.9 Bus communication

Table 12-28 HART, MODBUS and Profibus communication

Description	Specification	More information
Manufacturer ID	42 (2A Hex)	Manufacturer ID parameter
Device ID	34 (22 Hex)	Device type parameter
HART protocol revision	7.5	HART protocol revision parameter
Profibus profile	4.0	Profibus protocol revision parameter
Modbus RS485 RTU	-	-
Number of device variables	11	Number of process values, both measured and derived
Physical layers supported	FSK	Frequency Shift Keyed
Loop-powered	No	4-wire device

Note

Device-specific approvals

Always refer to nameplates on the device for device-specific approvals.

12.10 Approvals

Table 12-29 Certificates and approvals

Description	Specification
ATEX	• FCT030 transmitter (can be installed in Zone 1 for gas and Zone 21 for dust): Certificate SIRA 11ATEX1342X: Ⓔx II 2(1) GD Ex db eb [ia Ga] IIC T6 Gb Ta = -40°C to +60°C Ex tb [ia Da] IIIC/IIIC T85°C Db • FCS300/FC310 sensor + DSL (can be installed in Zone 1 for gas and Zone 20/21 for dust): ATEX Certificate: SIRA 18ATEX1052X Ⓔx II 1/2 G – For gas: Ex db ia IIC/IIB T* Ga/Gb Ex db IIC/IIB T* Ga/Gb Ta = -40°C to +60°C * Temperature class (dependent on the process temperature and the ambient temperature, see Special Conditions for Safe Use, Section 2.3) • FC330 compact system (can be installed in Zone 1 for gas): ATEX certificate SIRA 18ATEX1053X Ⓔx II 1/2 (1) G Ex db eb ia [ia Ga] IIC/IIB T* Ga/Gb Ta = -40°C to ** °C Temperature class (dependent on the "Maximum Process Temperature") ** Upper ambient temperature (dependent on the "Maximum Process Temperature")
IECEx	• FCT030 transmitter (can be installed in Zone 1 for gas and Zone 21 for dust): Certificate: IECEx SIR 11.0150X Ex db eb ia [ia Ga] IIC/IIB T6 Gb Ta = -40°C to +60°C. Ex tb [ia Da] IIIC/IIIB T85°C Db • FCS300/FC310 sensor + DSL (can be installed in Zone 1 for gas and Zone 20/21 for dust): Certificate: IECEx SIR 18,0017X – For gas: Ex db ia IIC/IIB T* Ga/Gb Ex db IIC/IIB T* Ga/Gb • FC330 compact system (can be installed in Zone 1 for gas): Certificate: IECEx SIR 18.0018X Ex db eb ia [ia Ga] IIC/IIB Ga/Gb Ta= -40 to ** °C * Temperature class (dependent on the "Maximum Process Temperature") ** Upper ambient temperature (dependent on the "Maximum Process Temperature")
CSA	

Description	Specification
Ex Canada:	FCT030 Industrial version transmitter (can be installed in Zone 1 for gas and Zone 21 for dust) Certificate: CSA 2508628 Ex db eb ia [ia Ga] IIC/IIB T6 Gb Ta = -40°C to +60°C. Ex tb [ia Da] IIIC/IIIB T85°C Db FCS300/FC310 sensor + DSL (can be installed in Zone 1 for gas and Zone 20/21 for dust): Certificate: 2508644 For gas: Ex db ia IIC/IIB T* Ga/Gb Ex db IIC/IIB T* Ga/Gb (Ga/Gb: Zone 0 in pipe and Zone 1 in environment) Ta = -40°C to +60°C * Temperature class (dependent on the process temperature and the ambient temperature") FC330 compact system (can be installed in Zone 1 for gas): Certificate: CSA 2508628 Ex db eb ia [ia Da] IIC/IIB Ga/Gb Ta = -40 to ** °C * Temperature class (dependent on the "Maximum Process Temperature") ** Upper ambient temperature (dependent on the "Maximum Process Temperature")

Description	Specification
For US:	FCT030 Industrial version transmitter (can be installed in Zone 1 for gas and Zone 21 for dust) and Class I +II+III Group A, B, C, D, E, F, G): Certificate: cCSAus 2508628 Class I, II, III Division 1 Gp A, B, C, D, E, F, G Class I Zone 1: AEx db ia [ia Ga] IIC T6 Gb Class II Zone 21: AEx tb [ia Da] IIIC T85°C Db FCS300/FC310 sensor + DSL (can be installed in Zone 1 for gas) Class I Group A, B, C, D: Certificate: 2508644 Class I, Division 1 Gp A, B, C, D, For gas: AEx db ia IIC T* Ga/Gb AEx db IIC T* Ga/Gb (Ga/Gb: Zone 0 in pipe and Zone 1 in environment) Ta = -40°C to +60°C * Temperature class (dependent on the process temperature and the ambient temperature") FC330 compact system (can be installed in Zone 1 for gas) Class I Group A, B, C, D: Certificate: CSA 2508628 Class I Division 1 Gp A, B, C, D AEx db eb ia [ia Da] IIC Ga/Gb Ta = -40 to ** °C * Temperature class (dependent on the "Maximum Process Temperature") ** Upper ambient temperature (dependent on the "Maximum Process Temperature")
Hygienic version	EHEDG
Pressure equipment	• 2014/68/EU Pressure Equipment Directive (PED) • Canadian Registration Number (CRN)

12.11 SensorFlash

Table 12-30 SensorFlash

Description	Specification
	SD card
Capacity	4 GB
File system support	FAT32 / 8.3
Temperature range Operation: Storage:	 -40 to +85 °C (-40 to 185 °F) -40 to +100 °C (-40 to 212 °F)

Note

SensorFlash functions support

Only the supplied 4 GB SD cards are supported for backup, restore, logging, and firmware update.

12.12 PED

The pressure equipment directive 2014/68/EU applies to the alignment of the statutory orders of the European member states for pressure equipment. Such equipment in the sense of the directive includes vessels, pipelines and accessories with a maximum allowable pressure of more than 0.5 bar above atmospheric. Flowmeters are considered as piping.

A detailed risk analysis of the flowmeter has been performed in accordance with the PED 2014/68/EU. All risks are assessed to be "none" provided that the procedures and standards referenced in these operating instructions are observed.

Division according to the danger potential

Flowmeters, which are categorized as piping, are divided into categories according to danger potential (medium, pressure, nominal diameter). The flowmeters fall into the categories I to III or they are manufactured according to Paragraph 3 - Sound Engineering Practice (SEP).

The following criteria are decisive for assessment of the danger potential, and are also shown in Diagrams 6 to 9.

Fluid group	Group 1 or 2
• Aggregate state	Liquid or gaseous
• Type of pressurized equipment – Pipeline	Product of pressure and volume (PS * V [barL])

The maximum allowable temperature for the used liquids or gases is the maximum process temperature which can occur, as defined by the user. This must be within the limits defined for the equipment.

Division of media (liquid/gaseous) into the fluid groups

Fluids are divided according to Article 13 into the following fluid groups:

Group 1 fluids

Explosive R phrases: for example: 2, 3 (1, 4, 5, 6, 9, 16, 18, 19, 44) 	**Very toxic** R phrases: for example: 26, 27, 28, 39 (32) 
Extremely flammable R phrases: for example: 12 (17) 	**Toxic** R phrases: for example: 23, 24, 25 (29, 31) 

Highly flammable R phrases: for example: 11, 15, 17 (10, 30) 	**Oxidizing** R phrases: for example: 7, 8, 9 (14, 15, 19) 
Flammable R phrases: for example11 (10) 	

Group 2 fluids

All fluids not belonging to Group 1.

Also applies to fluids which are for example dangerous to the environment, corrosive, dangerous to health, irritant or carcinogenic (if not highly toxic).

Conformity assessment

Flowmeters of categories I to III comply with the safety requirements of the directive. They are affixed with the CE mark and an EC declaration of conformity is provided.

The flowmeters are subjected to the conformity assessment procedure - Module H.

Flowmeters according to Article 4 Paragraph 3 are designed and manufactured in accordance with sound engineering practice in Denmark. PED conformity reference is not affixed to the CE mark.

Diagrams

- Gases of fluid group 1
- Pipelines according to Article 4 (a) (i) First dash
- Exception: unstable gases belonging to Categories I and II must be included in Category III.

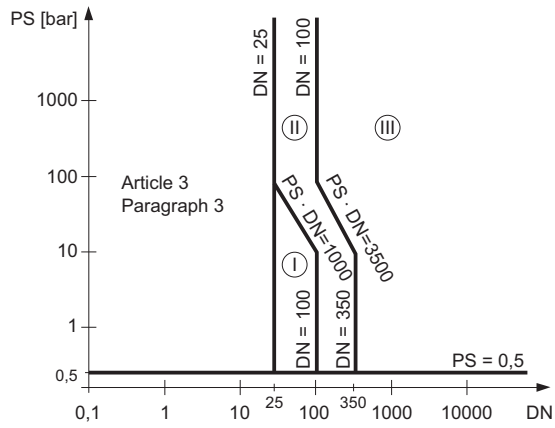

Figure 12-1 Diagram 6

- Gases of fluid group 2
- Pipelines according to Article 4 (a) (i) Second dash
- Exception: liquids at temperatures > 350 °C belonging to Category II must be included in Category III.

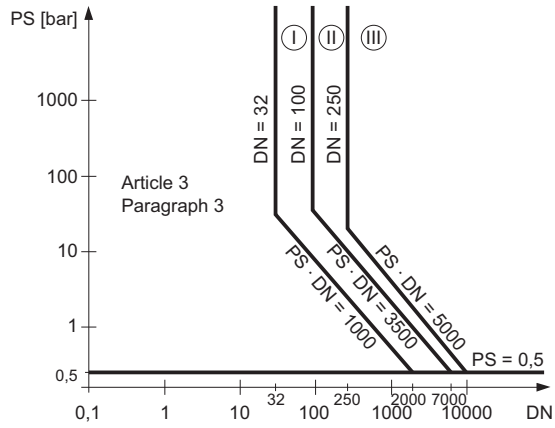

Figure 12-2 Diagram 7

- Liquids of fluid group 1

- Pipelines according to Article 4 (a) (ii) First dash

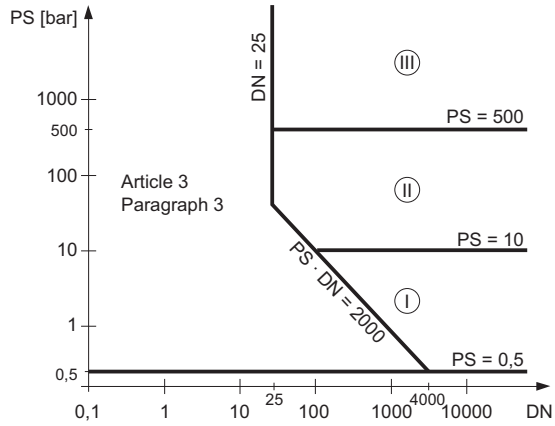

Figure 12-3 Diagram 8

- Liquids of fluid group 2
- Pipelines according to Article 4 (a) (ii) Second dash

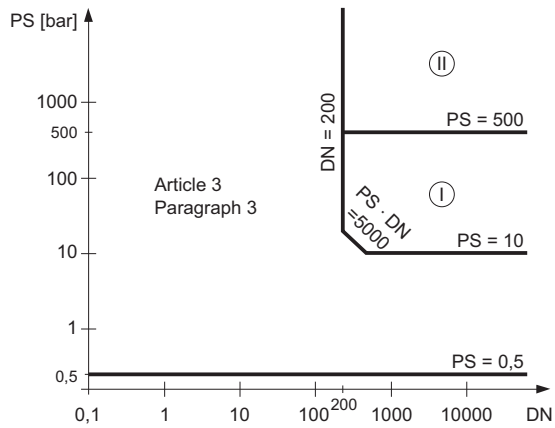

Figure 12-4 Diagram 9

12.13 Pressure - temperature ratings

Pressure - temperature ratings are determined by process connection material and applicable standards. The tables below detail the allowed maximum process pressure for sensor variants with stainless steel and Hastelloy measuring tubes.

With two major exceptions, the pressure rating of the flow sensors is independent of the process medium temperature. Design rules for flange connections in both the EN1092-1 and ASME B16.5 standards dictate pressure derating with increasing temperature. The charts below show the effect of process medium temperature on the pressure ratings for the flanges within the product program.

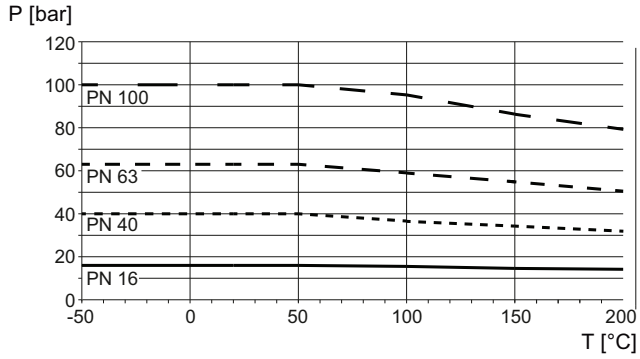

Figure 12-5 Metric flange ratings, EN 1092-1 (P: Process pressure; T: Process temperature)

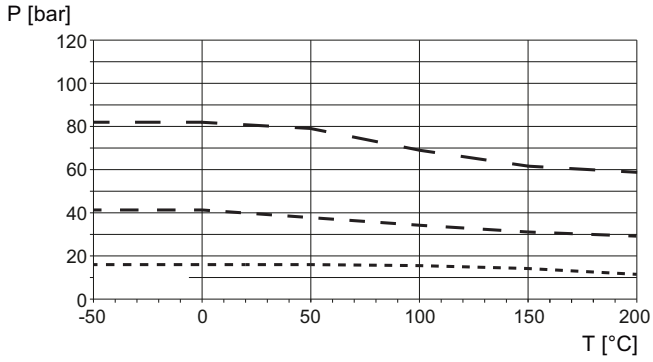

Figure 12-6 ANSI flange ratings, ASME B16.5 (P: Process pressure; T: Process temperature)

12.13.1 Pressure - temperature ratings (stainless steel sensors)

Table 12-31 EN1092-1 [bar]

PN (bar)	Temperature TS (°C)					
	-50	0	50	100	150	180
16	16.0	16.0	16.0	15.2	13.7	13.1
40	40.0	40.0	40.0	37.9	34.5	32.9
63	63.0	63.0	63.0	59.7	54.3	51.8
100	100.0	100.0	100.0	94.8	86.1	82.1

Table 12-32 ISO228-G and ASME B1.20.1 NPT [bar]

PN (bar)	Temperature TS (°C)					
	-50	0	50	100	150	200
110	110					

Table 12-33 ASME B16.5 [bar]

Class / Group	Temperature TS (°C)					
	-50	0	50	100	150	200
150 / 2.2	19	19	18.4	16.2	14.8	13.7
300 / 2.2	49.6	49.6	48.1	42.2	38.5	35.7
600 / 2.2	99.3	99.3	96.2	84.4	77.0	71.3
900 / 2.2	110	110	110	110	110	107
1500 / 2.2						

Table 12-34 JIS [bar]

PN (bar)	Temperature TS (°C)					
	-50	0	50	120	150	200
10K	14	14	14	14	13.4	12.4
20K	34	34	34	34	33.1	31.6

Table 12-35 DIN 11851 [bar]

PN (bar) / DN	Temperature TS (°C)				
	-50	0	50	100	140
25 / 50-100	25	25	25	25	25
40 / 10-40	40	40	40	40	40

Table 12-36 DIN 32676 & ISO 2852 [bar]

PN (bar) / DN	Temperature TS (°C)				
	-50	0	50	100	140
10 / 85-219.1	10	10	10	10	10
16 / 48.3-76.2	16	16	16	16	16
25 / 6.35-42.4	25	25	25	25	25

Note

Test pressure

Maximum allowable test pressure (MATP) for the flowmeter and process connection is 1.5 times the nominal pressure up to 150 bar (2176 psi).

Table 12-37 EN1092-1 [bar]

PN (bar)	Temperature TS (°C)					
	-50	0	50	100	150	200
16	16.0	16.0	16.0	16.0	16.0	16.0
40	40.0	40.0	40.0	40.0	40.0	40.0
63	63.0	63.0	63.0	63.0	63.0	63.0
100	100.0	100.0	100.0	100.0	100.0	100.0
160	160.0	160.0	153.0	145.0	134.0	125.0

Table 12-38 ISO228-G and ASME B1.20.1 NPT [bar]

PN (bar)	Temperature TS (°C)					
	-50	0	50	100	150	200
160				150		

Table 12-39 ASME B16.5 [bar]

Class	Temperature TS (°C)					
	-50	0	50	100	150	200
150	20.0	20..	19.5	17.7	15.8	13.8
300	51.7	51.7	51.7	51.5	50.3	48.6
600	103.4	103.4	103.4	103.0	100.3	97.2
900	150	150	150	145.0	134.0	125.0

Table 12-40 DIN 11851 [bar]

PN (bar) / DN	Temperature TS (°C)				
	-50	0	50	100	140
25 / 50-100	25	25	25	25	25
40 / 10-40	40	40	40	40	40

Dimension drawings

13

13.1 Sensor dimensions

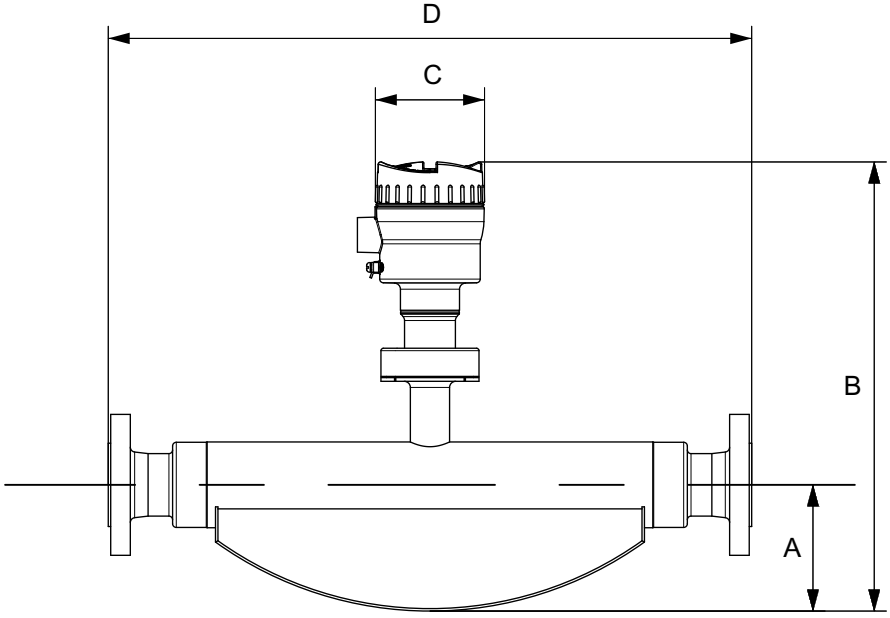

Table 13-1 Basic dimensions

Sensor DN	A in mm (inch)	B in mm (inch)	C in mm (inch)	Weight in kg (lb)
15 (½")	80 (3.15)	358 (14.09)	90 (3.54)	4.6 (10.1)
25 (1")	103 (4.06)	398 (15.67)	90 (3.54)	7.9 (17.4)
50 (2")	126 (4.96)	435 (17.13)	90 (3.54)	25.7 (56.7)
80 (3")	181 (7.13)	525 (20.67)	90 (3.54)	66.5 (147)
100 (4”)	181 (7.13)	622 (24.49)	90 (3.54)	128 (282.19)
150 (6”)	262 (10.31)	714 (28.11)	90 (3.54)	207 (456.36)

Note

The build in length (D) depends on the process connector.

13.2 316L stainless steel - standard

316L stainless steel - standard

Table 13-2 7ME463 - sensor sizes DN15

Meter tube nominal diameter DN 15 (1/2“)		
DN / process connection		D
10 (3/8)	PN 40 (EN 1092-1 B1)	385 (15.2)
	JIS 10K	385 (15.2)
15 (1/2)	PN 40 (EN 1092-1 B1)	385 (15.2)
	PN 63 (EN 1092-1 B2) PN 100 (EN 1092-1 B2)	403 (15.9)
	CL150 (ASME B16.5)	435 (17.13)
	CL300 (ASME B16.5) CL600 (ASME B16.5)	421 (16.6)
	CL900 (ASME B16.5) CL1500 (ASME B16.5)	
	JIS 10K	385 (15.2)
20 (3/4)	PN 40 (EN 1092-1 B1)	421 (16.6)
	CL150 (ASME B16.5)	421 (16.6)
	JIS 10K	421 (16.6)
Tolerance for dimension D: +0 / -3 mm (+0 / -0.018 in.)		

Dimensions in mm (inch)

Table 13-3 7ME463 - sensor sizes DN25

Meter tube nominal diameter DN 25 (1“)		
DN / process connection		D
20 (3/4)	PN 40 (EN 1092-1 B1)	576 (22.7)
	CL150 (ASME B16.5)	575 (22.6)
	JIS 10K	576 (22.7)
25 (1)	PN 40 (EN 1092-1 B1)	525 (20.7)

	PN 63 (EN 1092-1 B2)	564 (22.2)
	PN 100 (EN 1092-1 B2)	
	CL150 (ASME B16.5)	575 (22.6)
	CL300 (ASME B16.5)	576 (22.7)
	CL600 (ASME B16.5)	
	CL900 (ASME B16.5)	576 (22.7)
	CL1500 (ASME B16.5)	
	JIS 10K	525 (20.7)
40	PN 40 (EN 1092-1 B1)	576 (22.7)
(1 1/2)		
	PN 63 (EN 1092-1 B2)	572 (22.5)
	PN 100 (EN 1092-1 B2)	
	CL150 (ASME B16.5)	576 (22.7)
	CL300 (ASME B16.5)	576 (22.7)
	CL600 (ASME B16.5)	
	JIS 10K	576 (22.7)
Tolerance for dimension D: +0 / -3 mm (+0 / -0.018 in.)		

Dimensions in mm (inch)

Table 13-4 7ME463 - sensor sizes DN50

Meter tube nominal diameter DN 50 (2“)		
DN / process connection		D
40 (1 1/2)	PN 40 (EN 1092-1 B1)	763 (30)
	PN 63 (EN 1092-1 B2) PN 100 (EN 1092-1 B2)	745 (29.33)
	CL150 (ASME B16.5)	763 (30)
	CL300 (ASME B16.5) CL600 (ASME B16.5)	756 (29.76)

	CL900 (ASME B16.5) CL1500 (ASME B16.5)	780 (30.71)
	JIS 10K	763 (30)
50 (2)	PN 40 (EN 1092-1 B1)	715 (28.15)
	PN 63 (EN 1092-1 B2)	745 (29.33)
	PN 100 (EN 1092-1 B2)	745 (29.33)
	CL150 (ASME B16.5)	715 (28.15)
	CL300 (ASME B16.5)	763 (30)
	CL600 (ASME B16.5)	773 (30.43)
	CL900 (ASME B16.5) CL1500 (ASME B16.5)	790 (31.1)
	JIS 10K	715 (28.15)
65 (2 1/2)	PN 40 (EN 1092-1 B1)	763 (30)
	CL150 (ASME B16.5)	756 (29.76)
	CL900 (ASME B16.5) CL1500 (ASME B16.5)	800 (31.5)
	JIS 10K	763 (30)
Tolerance for dimension D: +0 / -3 mm (+0 / -0.018 in.)		

Dimensions in mm (inch)

Table 13-5 7ME463 - sensor sizes DN80

Meter tube nominal diameter DN 80 (3“)		
DN / process connection		D
65	PN 16 (EN 1092-1 B1)	–1)
(2 1/2“)	PN 40 (EN 1092-1 B1)	910 (35.83)
	PN 63 (EN 1092-1 B2)	
	PN 100 (EN 1092-1 B2)	
	CL150 (ASME B16.5)	–1)

	CL300 (ASME B16.5)	920 (36.22)
	CL600 (ASME B16.5)	
	CL900 (ASME B16.5)	965 (37.99)
	CL1500 (ASME B16.5)	
	JIS 10K	910 (35.83)
80 (3“)	PN 16 (EN 1092-1 B1)	870 (34.25)
	PN 40 (EN 1092-1 B1)	
	PN 63 (EN 1092-1 B2)	910 (35.83)
	PN 100 (EN 1092-1 B2)	
	CL150 (ASME B16.5)	880 (34.65)
	CL300 (ASME B16.5)	895 (35.24)
	CL600 (ASME B16.5)	920 (36.22)
	CL900 (ASME B16.5)	1100 (43.31)
	CL1500 (ASME B16.5)	1300 (51.18)
	JIS 10K	870 (34.25)
100 (4“)	PN 16 (EN 1092-1 B1)	875 (34.45)
	PN 40 (EN 1092-1 B1)	
	PN 63 (EN 1092-1 B2)	1060 (41.73)
	PN 100 (EN 1092-1 B2)	1080 (42.52)
	CL150 (ASME B16.5)	880 (34.65)
	CL300 (ASME B16.5)	1075 (42.32)
	CL600 (ASME B16.5)	1100 (43.31)
	CL900 (ASME B16.5)	1130 (44.49)
	CL1500 (ASME B16.5)	1150 (45.28)
	JIS 10K	1060 (41.73)
1) On request		
Tolerance for dimension D: +0 / -3 mm (+0 / -0.018 in.)		

Dimensions in mm (inch)

Table 13-6 7ME463 - sensor sizes DN100

Meter tube nominal diameter DN 100 (4“)		
DN / process connection		D
80 (3“)	PN 16 (EN 1092-1 B1)	1222 (48.11)
	PN 40 (EN 1092-1 B1)	
	PN 63 (EN 1092-1 B2)	1234 (48.58)
	PN 100 (EN 1092-1 B2)	
	CL150 (ASME B16.5)	1244 (48.98)
	CL300 (ASME B16.5)	
	CL600 (ASME B16.5)	
	CL900 (ASME B16.5)	1470 (57.87)
	CL1500 (ASME B16.5)	1500 (59.05)
	JIS 10K	1275 (50.20)
100 (4“)	PN 16 (EN 1092-1 B1)	1122 (44.17)
	PN 40 (EN 1092-1 B1)	1144 (45.04)
	PN 63 (EN 1092-1 B2)	1304 (51.34)
	PN 100 (EN 1092-1 B2)	1334 (52.52)
	CL150 (ASME B16.5)	1144 (45.04)
	CL300 (ASME B16.5)	1324 (52.13)
	CL600 (ASME B16.5)	1354 (53.31)
	CL900 (ASME B16.5)	1380 (54.33)
	CL1500 (ASME B16.5)	1400 (55.12)
	JIS 10K	1150 (45.28)
150 (6“)	PN 16 (EN 1092-1 B1)	1300 (51.18)
	PN 40 (EN 1092-1 B1)	

	CL150 (ASME B16.5)	1330 (52.36)
	JIS 10K	1300 (51.18)
	JIS 10K	1150 (45.28)
Tolerance for dimension D: +0 / -3 mm (+0 / -0.018 in.)		

Dimensions in mm (inch)

Table 13-7 7ME463 - sensor sizes DN150

Meter tube nominal diameter DN 150 (6“)		
DN / process connection		D
100 (4“)	PN 16 (EN 1092-1 B1)	1569 (61.77)
	PN 40 (EN 1092-1 B1)	1599 (62.95)
	CL150 (ASME B16.5)	1630 (64.17)
	CL300 (ASME B16.5)	1650 (64.96)
	CL600 (ASME B16.5)	1675 (65.94)
	CL900 (ASME B16.5)	1705 (67.13)
	CL1500 (ASME B16.5)	1725 (67.91)
150 (6“)	PN 16 (EN 1092-1 B1)	1421 (55.94)
	PN 40 (EN 1092-1 B1)	1461 (57.52)
	CL150 (ASME B16.5)	1485 (58.46)
	CL300 (ASME B16.5)	1505 (59.25)
	CL600 (ASME B16.5)	1555 (61.22)
	CL900 (ASME B16.5)	1605 (63.19)
	CL1500 (ASME B16.5)	1665 (65.55)
200 (8")	PN 40 (EN 1092-1 B1)	1637 (64.45)
	CL150 (ASME B16.5)	1650 (64.96)
	CL300 (ASME B16.5)	1670 (65.75)
	JIS10K	1585 (62.4)
	CL1500 (ASME B16.5)	1400 (55.12)

	JIS 10K	1150 (45.28)
Tolerance for dimension D: +0 / -3 mm (+0 / -0.018 in.)		

Dimensions in mm (inch)

13.3 316L stainless steel - NAMUR

316L stainless steel - NAMUR

Table 13-8 7ME463 - sensor sizes DN15 to DN150

Devices DN 15 ... 150 in NAMUR standard installation lengths		
Meter tube	**Process connectionEN 1092-1 B1**	**L**
DN 15 (1/2“)	DN 15 (1/2“) / PN 40	510 (20.08)
DN 25 (1“)	DN 25 (1“) / PN 40	600 (23.62)
DN 50 (1“)	DN 50 (1“) / PN 40	715 (28.15)
DN 80 (3")	DN 80 (3") / PN 40	915 (36.02)
DN 100 (4")	DN 100 (4") / PN 16	1400 (55.12)
DN 150 (6")	DN 150 (6") / PN 16	1700 (66.93)
EN1092-1 D, PN63	715 (28.1)	715 (28.1)
EN1092-1 D, PN100	715 (28.1)	715 (28.1)
EN1092-1 D, PN160		725 (28.5)

Dimensions in mm (inch)

13.4 Hygienic versions

316L stainless steel - hygienic version

Table 13-9 7ME463 - sensor sizes DN15 and DN150

Meter tube nominal	**Process connection**	**D**							
		EN 1092-1 B1	**EN 1092-1 B1**	**EN 1092-1 B2**	**EN 1092-1 B2**	**ASME CL**			**JIS 10K**
		PN 16	**PN 40**	**PN 63**	**PN 100**	**CL150**	**CL300**	**CL600**	
DN 15 (1/2“)	DN 10 (1/4“)	–	449 (17.7)	449 (17.7)	449 (17.7)	–	–	–	449 (17.7)
	DN 15 (1/2“)	–	442 (17.4)	442 (17.4)	442 (17.4)	442 (17.4)	442 (17.4)	442 (17.4)	442 (17.4)
	DN 20 (3/4“)	–	428 (16.9)	428 (16.9)	428 (16.9)	428 (16.9)	428 (16.9)	428 (16.9)	428 (16.9)

DN 25 (1“)	DN 20 (3/4“)	–	646 (25.4)	646 (25.4)	646 (25.4)	646 (25.4)	646 (25.4)	646 (25.4)	646 (25.4)
	DN 25 (1“)	–	614 (24.2)	614 (24.2)	614 (24.2)	614 (24.2)	614 (24.2)	614 (24.2)	614 (24.2)
	DN 40 (1 1/2“)	–	576 (22.7)	576 (22.7)	576 (22.7)	576 (22.7)	576 (22.7)	576 (22.7)	576 (22.7)
DN 50 (2“)	DN 40 (1 1/2“)	–	814 (32.0)	814 (32.0)	814 (32.0)	814 (32.0)	814 (32.0)	814 (32.0)	814 (32.0)
	DN 50 (2“)	–	764 (30.1)	764 (30.1)	764 (30.1)	764 (30.1)	764 (30.1)	764 (30.1)	764 (30.1)
	DN 65 (2 1/2“)	–	819 (32.2)	819 (32.2)	819 (32.2)	792 (31.2)	792 (31.2)	792 (31.2)	819 (32.2)
DN 80 (3“)	DN 65 (2 1/2“)	–	1021 (40.2)	1021 (40.2)	1021 (40.2)	1021 (40.2)	1021 (40.2)	1021 (40.2)	1021 (40.2)
	DN 80 (3“)	–	971 (38.2)	–	971 (38.2)	971 (38.2)	971 (38.2)	971 (38.2)	971 (38.2)
	DN 100 (4“)	971 (38.2)	971 (38.2)	971 (38.2)	971 (38.2)	971 (38.2)	971 (38.2)	971 (38.2)	971 (38.2)
DN 100 (4“)	DN 80 (3“)	1357 (53.4)	1357 (53.4)	1357 (53.4)	1357 (53.4)	1357 (53.4)	1357 (53.4)	1357 (53.4)	1357 (53.4)
	DN 100 (4“)	1280 (50.4)	1280 (50.4)	1280 (50.4)	1280 (50.4)	1280 (50.4)	1280 (50.4)	1280 (50.4)	1280 (50.4)
	DN 150 (6“)	1261 (49.6)	1261 (49.6)	1261 (49.6)	1261 (49.6)	1261 (49.6)	1261 (49.6)	1261 (49.6)	1261 (49.6)
DN 150 (6“)	DN 100 (4“)	1592 (62.7)	1592 (62.7)	1632 (64.3)	1632 (64.3)	1592 (62.7)	1632 (64.3)	1632 (64.3)	1592 (62.7)
	DN 150 (6“)	1502 (59.1)	1502 (59.1)	1542 (60.7)	1542 (60.7)	1502 (59.1)	1542 (60.7)	1542 (60.7)	1502 (59.1)

Dimensions in mm (inch)

Note

D dimension tolerance:

- Meter tube nominal diameter DN 15 ... 50 (1/2" ... 2"): +0 / -3 mm (+0 / -0.018 in.)
- Meter tube nominal diameter DN 80 (3"): +0 / -5 mm (+0 / -0.2 in.)
- Meter tube nominal diameter DN 100 ... 150 (4" ... 6"): +0 / -8 mm (+0 / -0.31 in.)

Table 13-10 7ME463 - sensor sizes DN15 and DN80

Process connection in accordance with DIN 11851, Meter tube nominal diameter DN 15 ... 80 (1/2“ ... 3“)	
Meter	

Tube				
Process connection				D
DN	DN	PN		
15 (1/2“)	10 (3/8“)	40		413 (16.3)
	15 (1/2“)			
	20 (3/4“)			
25 (1“)	20 (3/4“)			590 (23.2)
	25 (1“)			
	40 (1 1/2”)			
50 (2“)	40 (1 1/2”)			763 (30.0)
	50 (2“)	25		740 (29.1)
	65 (2 1/2“)			
80 (3“)	65 (2 1/2“)			990 (39.0)
	80 (3“)			940 (37.0)
	100 (4“)			
	40 (1 1/2”)			
Tolerance for dimension D: +0 / -3 mm (+0 / -0.018 in.)				

Dimensions in mm (inch)

Table 13-11 7ME463 - sensor sizes DN15 and DN80

Process connection in accordance with DIN ISO 228 und ASME B 1.20.1, Meter tube nominal diameter DN 15 ... 80 (1/2“ ... 3“)			
Meter			
tube			
Process connection			
DN	DN / G	PN	D
15 (1/2“)	8 (1/4“) /	100	450
	G 1/4“		(17,72)
	15 (1/2“) /		
	G 1/2“		
	25 (1“) / G 1“		490
			(19,29)
	15 (1/2“) /		450
	1/2“ NPT		(17,72)
Tolerance for dimension D: +0 / -3 mm (+0 / -0.018 in.)			

Dimensions in mm (inch)

Table 13-12 7ME463 - sensor sizes DN15 and DN80

Process connection in accordance with DIN 32676, Meter tube nominal diameter DN 15 ... 80 (1/2“ ... 3“)			
Meter			
tube			

Process connection				
DN	DN	PN		
15 (1/2“)	10 (3/8“)	40		413 (16.3)
	15 (1/2“)			
	20 (3/4“)			
25 (1“)	20 (3/4“)			590 (23.2)
	25 (1“)			
	40 (1 1/2”)			
50 (2“)	40 (1 1/2”)			763 (30.0)
	50 (2“)	25		740 (29.1)
	65 (2 1/2“)			
80 (3“)	65 (2 1/2“)	10		950 (37.4)
	80 (3“)			910 (35.83)
	100 (4“)			
Tolerance for dimension D: +0 / -3 mm (+0 / -0.018 in.)				

Dimensions in mm (inch)

Table 13-13 7ME463 - sensor sizes DN15 and DN80

Process connection in accordance with SMS 1145, Meter tube nominal diameter DN 25 ... 80 (1“ ... 3“)				
Meter				
tube				
Process connection				
DN	DN	PN		D
25 (1“)	25 (1“)	6		590 (23.2)
	40 (1 1/2”)			
50 (2“)	40 (1 1/2”)	6		763 (30.0)
	50 (2“)			740 (29.1)
	65 (2 1/2“)			
80 (3“)	65 (2 1/2“)			990 (39.0)
	80 (3“)			940 (37.0)
Tolerance for dimension D: +0 / -3 mm (+0 / -0.018 in.)				

Dimensions in mm (inch)

13.5 Transmitter dimensions

Compact version

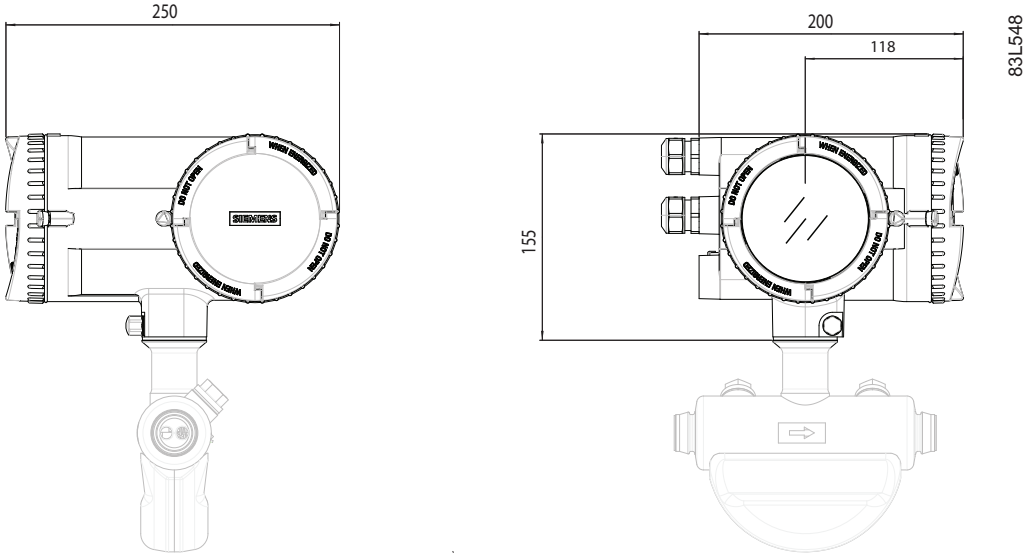

Dimensions in mm

Remote version

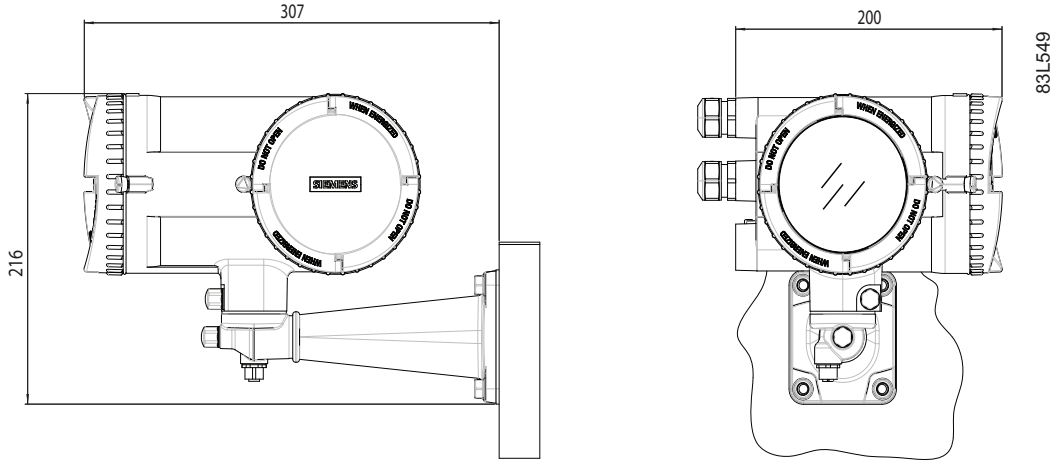

Dimensions in mm

Weight: 4.8 kg (10.6 lbs)

13.6 Wall mount enclosure dimensions

Wall mount housing

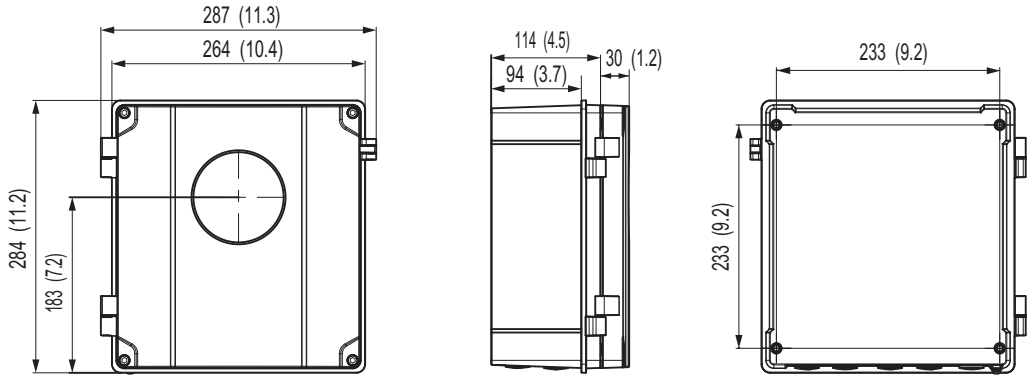

Dimensions in mm (")

13.7 Mounting bracket

For compact housing

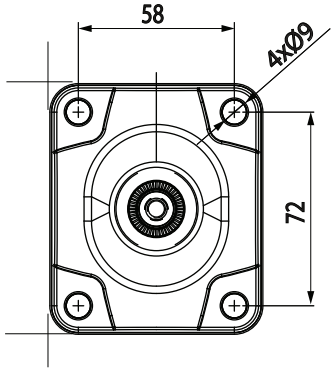

Dimensions in mm

Weight: 4.8 kg (10.6 lbs)

Technical reference

A

A.1 Theory of operation

The Coriolis principle of measurement

The flow measurement is based on the Coriolis law of motion. Particles moving in a rotating / oscillating system will resist imposed oscillations in a manner consistent with their mass and velocity (momentum).

The SITRANS F C sensors are energized by an electromagnetic driver circuit which oscillates the pipes at their resonant frequency. Two pickups are placed symmetrically on either side of the driver to provide position signals for digital processing.

When the media flows through the sensor, Coriolis force will act on the measuring tubes and cause deflection which can be measured as a phase shift between Pickup 1 and Pickup 2. The phase shift is proportional to the mass flowrate.

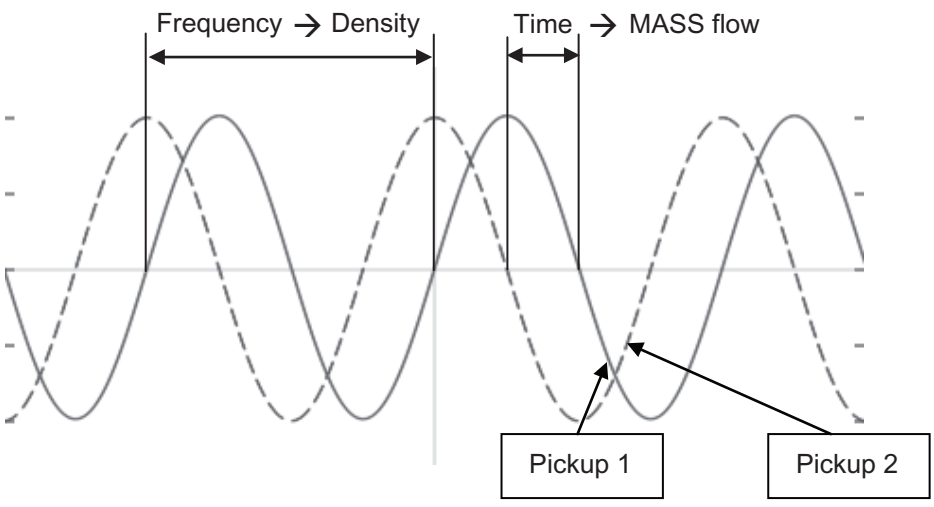

The frequency (or period) of the vibration is a direct function of the process media density.

The frequency and amplitude of the driver is regulated to ensure a stable output from the 2 pickups. The temperature of the sensor tubes is measured to provide accurate compensation for changes in the material stiffness. As a result the process media temperature is also accurately measured.

The flow proportional phase signal from the pickups, the temperature measurement and the driver frequency enable calculation and reporting of mass, density, volume, and temperature.

Digital signal processing (DSP)

The analog to digital conversion takes place in an ultra low noise sigma delta converter with high signal resolution. With fast digital signal processing massflow and density values are calculated using a patented DFT technology (Discrete Fourier Transformation). The combination of this patented DFT technology and the fast DSP enables short response time (< 10 ms) to changes in the measured values.

The built-in noise filter is configurable and can be used for improving the performance of the flowmeter, in case the installation and application conditions are not ideal. Typical process noise such as gas bubbles (two-phase-flow) can be reduced through the filter functions.

A.2 Sensor dimension dependent default settings

A.2.1 Sensor dimension dependent default settings (Process values)

Mass flow

Sensor type	Sensor size	Default value	Unit:	Kg/s
Upper Limit Alarm and Upper Limit Warning				
FCS300	DN 15	2,7777778		
	DN 25	12,152778		
	DN 50	31,25		
	DN 80	86,805556		
	DN 100	180,56		
	DN 150	298,61		

Sensor type	Sensor size	Default value	Unit:	Kg/s
Lower Limit Alarm and Lower Limit Warning				
FCS300	DN 15	-2,7777778		
	DN 25	-12,152778		
	DN 50	-31,25		
	DN 80	-86,805556		
	DN 100	-180,56		
	DN 150	-298,61		

Sensor type	Sensor size	Default value	Unit:	Kg/s
Alarm Hysteresis				
FCS300	DN 15	0		
	DN 25	0		
	DN 50	0		
	DN 80	0		
	DN 100	0		
	DN 150	0		

Low Flow Cut-off		Kg/s	Kg/h
FCS300	DN 15	0,012333333	44,4
	DN 25	0,056166667	202,2
	DN 50	0,140444444	505,6
	DN 80	0,368611111	1327
	DN 100	0,783	2820
	DN 150	1,269	4570

A.2.2 Sensor dimension dependent default settings (Process values)

Volume flow

Sensor type	Sensor size	Default value	Unit:	Kg/s
Upper Limit Alarm and Upper Limit Warning				
FCS300	DN 15	0,0225		
	DN 25	0,0626		
	DN 50	0,250		
	DN 80	0,641		
	DN 100	1		
	DN 150	2,3		

Sensor type	Sensor size	Default value	Unit:	Kg/s
Lower Limit Alarm and Lower Limit Warning				
FCS300	DN 15	-0,0225		
	DN 25	-0,0626		
	DN 50	-0,250		
	DN 80	-0,641		
	DN 100	-1		
	DN 150	-2,3		

Sensor type	Sensor size	Default value	Unit:	Kg/s
Alarm Hysteresis				
FCS300	DN 15	0		
	DN 25	0		
	DN 50	0		
	DN 80	0		
	DN 100	0		
	DN 150	0		

Low Flow Cut-off		m^3/s	m^3/h
FCS300	DN 15	1,23333E-05	0,0444
	DN 25	0,00005617	0,2022
	DN 50	0,000140444	0,5056
	DN 80	0,000368611	1,327
	DN 100	0,000783333	2,82
	DN 150	0,001269444	4,57

A.2.3 Sensor dimension dependent default settings (Process values)

Standard Volume flow

Sensor type	Sensor size	Default value	Unit:	Kg/s
Upper Limit Alarm and Upper Limit Warning				
FCS300	DN 15	0,0225		
	DN 25	0,0626		
	DN 50	0,250		
	DN 80	0,641		
	DN 100	1		
	DN 150	2,25		

Sensor type	Sensor size	Default value	Unit:	Kg/s
Lower Limit Alarm and Lower Limit Warning				
FCS300	DN 15	-0,0225		
	DN 25	-0,0626		
	DN 50	-0,250		
	DN 80	0,641		
	DN 100	-1		
	DN 150	-2,25		

Sensor type	Sensor size	Default value	Unit:	Kg/s
Alarm Hysteresis				
FCS300	DN 15	0		
	DN 25	0		
	DN 50	0		
	DN 80	0		
	DN 100	0		
	DN 150	0		

Low Flow Cut-off		m^3/s	m^3/h
FCS300	DN 15	1,23333E-05	0,0444
	DN 25	0,00005617	0,2022
	DN 50	0,000140444	0,5056
	DN 80	0,000368611	1,327
	DN 100	0,000783333	2,82
	DN 150	0,001269444	4,57

A.2.4 Sensor dimension dependent default settings (Process values)

Fraction (if available)

Sensor type	Sensor size	Unit	Default value
Upper Limit Alarm and Upper Limit Warning			
FCS300	DN 15	Mass flow Kg/s	2,7777778
		Volume flow m^3/s	
	DN 25	Mass flow Kg/s	12,152778
		Volume flow m^3/s	
	DN 50	Mass flow Kg/s	31,25
		Volume flow m^3/s	
	DN 80	Mass flow Kg/s	86,805556
		Volume flow m^3/s	0,641
	DN 100	Mass flow Kg/s	180,56
		Volume flow m^3/s	1
	DN 150	Mass flow Kg/s	298,61
		Volume flow m^3/s	2,3

Sensor type	Sensor size	Unit	Default value
Lower Limit Alarm and Lower Limit Warning			
FCS300	DN 15	Mass flow Kg/s	-2,7777778
		Volume flow m^3/s	
	DN 25	Mass flow Kg/s	-12,152778
		Volume flow m^3/s	
	DN 50	Mass flow Kg/s	-31,25
		Volume flow m^3/s	
	DN 80	Mass flow Kg/s	-86,805556
		Volume flow m^3/s	-0,641
	DN 100	Mass flow Kg/s	-180,56
		Volume flow m^3/s	-1
	DN 150	Mass flow Kg/s	-298,61
		Volume flow m^3/s	-2,3

A.2.5 Sensor dimension dependent default settings (Process values)

Zero Point Adjustment

Sensor type	Sensor size	Default value Kg/s	
Standard Deviation Limit			
FCS300	DN 15	0,0008	
	DN 25	0,0027	
	DN 50	0,009	
	DN 80	0,04	
	DN 100	0,0832	
	DN 150	0,1376	

Zero Offset Limit			
FCS300	DN 15	0,012333333	
	DN 25	0,056166667	
	DN 50	0,140444444	
	DN 80	0,368611111	
	DN 100	0,783	
	DN 150	1,269	

Alarm Hysteresis			
FCS300	DN 15	0	
	DN 25	0	
	DN 50	0	
	DN 80	0	
	DN 100	0	
	DN 150	0	

Low Flow Cut-off		Kg/s	Kg/h
FCS300	DN 15	0,012333333	44,4
	DN 25	0,056166667	202,2
	DN 50	0,140444444	505,6
	DN 80	0,368611111	1327
	DN 100	0,783	2820
	DN 150	1,269	4570

A.2.6 Sensor dimension dependent default settings (Process values)

Mass flow

Sensor dimension	Default value	Unit	Range
Upper Limit Alarm and Upper Limit Warning			
DN 15	8.84	kg/s	-8.84 to +8.84
DN 25	24.5	kg/s	-24.5 to +24.5
DN 50	98.2	kg/s	-98.2 to +98.2
DN 80	251	kg/s	-251 to +251
DN 100			
DN 150			
Lower Limit Alarm and Lower Limit Warning			
DN 15	-8.84	kg/s	-8.84 to +8.84
DN 25	-24.5	kg/s	-24.5 to +24.5
DN 50	-98.2	kg/s	-98.2 to +98.2
DN 80	-251	kg/s	-251 to +251
DN 100			
DN 150			
Alarm Hysteresis			
DN 15	0	kg/s	0 to +8.84
DN 25	0	kg/s	0 to +24.5
DN 50	0	kg/s	0 to +98.2
DN 80	0	kg/s	0 to +251

Sensor dimension	Default value	Unit	Range
DN 100			
DN 150			

Sensor dimension	Default value kg/s	Default value kg/h	Range kg/s
Low Flow Cut-Off			
DN 15	0,012333333	44,4	0 to +8.84
DN 25	0,056166667	202,2	0 to +24.5
DN 50	0,140444444	505,6	0 to +98.2
DN 80	0,368611111	1327	0 to +351
DN 100	0.783333333	2820	
DN 150	1.269444444	4570	

Volume flow

Sensor dimension	Default value	Unit	Range
Upper Limit Alarm and Upper Limit Warning			
DN 15	0.005	m^3/s	-0.005 to +0.005
DN 25	0.015	m^3/s	-0.015 to +0.015
DN 50	0.059	m^3/s	-0.059 to +0.059
DN 80	0.249	m^3/s	-0.249 to +0.249
DN 100			
DN 150			
Lower Limit Alarm and Lower Limit Warning			
DN 15	-0.005	m^3/s	-0.005 to +0.005
DN 25	-0.015	m^3/s	-0.015 to +0.015
DN 50	-0.059	m^3/s	-0.059 to +0.059
DN 80	-0.249	m^3/s	-0.249 to +0.249
DN 100			
DN 150			
Alarm Hysteresis			
DN 15	0	m^3/s	0 to +0.005
DN 25	0	m^3/s	0 to +0.015
DN 50	0	m^3/s	0 to +0.059
DN 80	0	m^3/s	0 to +0.249
DN 100			
DN 150			
Low Flow Cut-Off			
DN 15	0.010277778	37	0 to +8.84
DN 25	0.031944444	115	0 to +24.5
DN 50	0.144444444	520	0 to +98.2
DN 80	0.377777778	1360	0 to +351

Sensor dimension	Default value	Unit	Range
DN 100	0.783333333	2820	
DN 150	1.269444444	4570	

Standard volume flow

Sensor dimension	Default value	Unit	Range
Upper Limit Alarm and Upper Limit Warning			
DN 15	8.84	normal m^3/s	-8.84 to +8.84
DN 25	24.5	normal m^3/s	-24.5 to +24.5
DN 50	98.2	normal m^3/s	-98.2 to +98.2
DN 80	251	normal m^3/s	-251 to +251
DN 100			
DN 150			
Lower Limit Alarm and Lower Limit Warning			
DN 15	-8.84	normal m^3/s	-8.84 to +8.84
DN 25	-24.5	normal m^3/s	-24.5 to +24.5
DN 50	-98.2	normal m^3/s	-98.2 to +98.2
DN 80	-251	normal m^3/s	-251 to +251
DN 100			
DN 150			
Alarm Hysteresis			
DN 15	0	normal m^3/s	0 to +8.84
DN 25	0	normal m^3/s	0 to +24.5
DN 50	0	normal m^3/s	0 to +98.2
DN 80	0	normal m^3/s	0 to +251
DN 100			
DN 150			
Low Flow Cut-Off			
DN 15	0.000010278	normal m^3/s	0 to +8.84
DN 25	0.000031944	normal m^3/s	0 to +24.5
DN 50	0.000144444	normal m^3/s	0 to +98.2
DN 80	0.000377778	normal m^3/s	0 to +251
DN 100	0.000783333		
DN 150	0.001269444		

Fraction

Sensor dimension	Default value		Unit	Range
Upper Limit Alarm and Upper Limit Warning				
DN 15	Mass flow	8.84	kg/s	-8.84 to +8.84
	Volume flow	0.005	m^3/s	-0.005 to +0.005

Sensor dimension	Default value		Unit	Range
DN 25	Mass flow	24.5	kg/s	-24.5 to +24.5
	Volume flow	0.015	m^3/s	-0.015 to +0.015
DN 50	Mass flow	98.2	kg/s	-98.2 to +98.2
	Volume flow	0.059	m^3/s	-0.059 to +0.059
DN 80	Mass flow	251	kg/s	- 251 to +251
	Volumeflow	0.249	m^3/s	-0.249 to +0.249
DN 100	Mass flow			
	Volumeflow			
DN 150	Mass flow			
	Volumeflow			
Lower Limit Alarm and Lower Limit Warning				
DN 15	Mass flow	-8.84	kg/s	-8.84 to +8.84
	Volume flow	-0.005	m^3/s	-0.005 to +0.005
DN 25	Mass flow	-24.5	kg/s	-24.5 to +24.5
	Volume flow	-0.015	m^3/s	-0.015 to +0.015
DN 50	Mass flow	-98.2	kg/s	-98.2 to +98.2
	Volume flow	-0.059	m^3/s	-0.059 to +0.059
DN 80	Mass flow	-251	kg/s	- 251 to +251
	Volumeflow	-0.249	m^3/s	-0.249 to +0.249
DN 100	Mass flow			
	Volumeflow			
DN 150	Mass flow			
	Volumeflow			
Alarm Hysteresis				
DN 15	Mass flow	0	kg/s	0 to +8.84
	Volume flow	0	m^3/s	0 to +0.005
DN 25	Mass flow	0	kg/s	0 to +24.5
	Volume flow	0	m^3/s	0 to +0.015
DN 50	Mass flow	0	kg/s	0 to +98.2
	Volume flow	0	m^3/s	0 to +0.059
DN 80	Mass flow	0	kg/s	0 to +251
	Volume flow	0	m^3/s	0 to +0.249
DN 100	Mass flow			
	Volume flow			
DN 150	Mass flow			
	Volume flow			

Zero point adjustment

Sensor dimension	Default value kg/s	Default value kg/h	Range
Standard Deviation Limit			
DN 15	0,0008	2,88	
DN 25	0,0027	9,72	
DN 50	0,009	32,4	
DN 80	0,04	144	
DN 100	0.0832	299.52	
DN 150	0.1376	495.36	
Offset Limit			
DN 15	0,012333333	44,4	
DN 25	0,056166667	202,2	
DN 50	0,140444444	505,6	
DN 80	0,368611111	1327	
DN 100	0.783333333	2820	
DN 150	1.269444444	4570	

HART communication

B

Highway Addressable Remote Transducer, HART, is an industrial protocol. The HART protocol is an open standard. Full details about HART can be obtained from the HART communication website (https://fieldcommgroup.org/technologies/hart).

The device can be configured over the HART network using either a Field Communicator or a software package. The recommended software package is the SIMATIC Process Device Manager (PDM) (Page 243) by Siemens. Use HART Device Description (EDD) to integrate HART devices in engineering systems as SIMATIC PDM and AMS.

HART Communicator menu structures are available in HART Communication Foundation (https://fieldcommgroup.org/technologies/hart).

B.1 Mode of operation HART function

Note

Priority of operation and failure of power supply

- Operation at the positioner has priority over specifications from the HART communicator.
- Failure of the auxiliary power to the positioner also interrupts communications.

Function

The device is also available with built-in HART functionality. The HART protocol allows you to communicate with your device using a HART communicator, PC, or programming unit. You can do the following with your device:

- Convenient configuration
- Store configurations
- Call up diagnostic data
- Show online measured values

Communication takes place as frequency modulation on the existing signal lines for the setpoint of 4 to 20 mA.

The device is integrated into the following parameter assignment tools:

- HART communicator
- PDM (Process Device Manager)
- AMS (Asset Management System)

Modbus communication

C

Remote operation

D

D.1 Overview of device configuration software

There are currently two competing technologies for configuring field devices:

- Electronic Device Description Language (EDDL)-based software
- Field Device Tool / Device Type Manager (FDT/DTM)-based software

From a practical point of view, both EDDL and FDT/DTM solutions do the same thing: provide a way of reading and writing configuration parameters to field devices and viewing advanced diagnostics.

Note

- SIMATIC PDM (an EDDL-based software) configures a field device using the Electronic Device Description (EDD) for that device.
- PACTware and Fieldcare (FDT-based software) use the DTM for that field device.

In addition, there is a new standard called Field Device Integration (FDI) which is a merger of these two technologies. Many of the major vendors have stated that their configuration software will evolve into being an FDI host. At the time this manual was written, Siemens had announced that SIMATIC PDM will become a FDI host system in the near future.

D.2 SIMATIC PDM

Overview

SIMATIC PDM (Process Device Manager) is a general-purpose, manufacturer-independent tool for the configuration, parameter assignment, commissioning, diagnostics and maintenance of intelligent field devices and field components. Follow-up installations and additional information on SIMATIC PDM are available on the Internet at SIMATIC PDM (www.siemens.com/simatic-pdm).

SIMATIC PDM monitors the process values, alarms and status signals of the device. It allows you to display, compare, adjust, verify, and simulate process device data; also to set schedules for calibration and maintenance.

For information on, for example, how to install and integrate devices, commission the software, see Operating Manual 'Help for SIMATIC PDM'. The manual is delivered with SIMATIC PDM software. Once the SIMATIC PDM is installed on your computer you find the manual under: Start > All programs > Siemens Automation > SIMATIC > Documentation. Link at our website:

'Help for SIMATIC PDM' (https://support.industry.siemens.com/cs/ww/de/view/109482406/en).

Note

Field device parameters

- Consult chapter "Parameter assignment (Page 135)" for a list of parameters and more information.
- While the device is in PROGRAM mode the output remains active. The output continues to respond to changes in the device.

Check SIMATIC PDM version

If problems occur while using SIMATIC PDM check the Internet at www.simatic.com/simatic-pdm (www.simatic.com/simatic-pdm) to make sure you have the most recent version of SIMATIC PDM, the most recent Service Pack (SP) and the most recent hot fix (HF).

Updating the Electronic Device Description (EDD)

The EDD revision must match the Firmware revision in the device according the table in Product compatibility (Page 10). To install a new EDD:

1. Go to Internet support page by one of the following ways:
   - Via Mobile App "Industry Online Support" (https://support.industry.siemens.com/cs/ww/de/sc/2067).
     Download the App and scan the QR code on the nameplate of your device,Device identification (Page 81).
   - Via Software downloads (http://www.siemens.com/processinstrumentation/downloads)
     Enter in field "Enter search term..." the product name.
     Select "Download" in dropdown menu of field "Entry type".
2. Download the EDD of your device from the Internet.
3. Launch "Device Integration Manager" of SIMATIC PDM, browse to the EDD file and select it.

Configuring a new device to SIMATIC PDM

Note

If you click on "Cancel" during an upload from the device to SIMATIC PDM some parameters will be updated.

1. Check with table in Product compatibility (Page 10) if you have the most recent version of the EDD. If necessary, update the EDD as described in SIMATIC PDM (Page 243).
2. Set "Address" via handheld programmer (default for PROFIBUS PA is 126).
   - In "PROGRAM mode", navigate to your field device, for example to: SIPART PS2 > Communication > Device Address.
   - Press RIGHT arrow twice, to open parameter view and enable "Edit mode".
   - If required, key in a new value and press RIGHT arrow to accept it.
     The display shows the new value.
   - Press "Mode" to return to "Measurement mode".
3. Launch SIMATIC Manager and create a new project.
4. Go to the menu "Device > Master Reset".
5. Click on "Factory Defaults".
6. After the reset is complete click on "Close".
7. Upload parameters to the PC/PG.
8. Configure the device via the Quick Start wizard.

Set address

Open in SIMATIC PDM the menu Device – Set Address, enter a value for New Address, and click on Assign Address.

Certificates and support

E

E.1 Certificates

You can find certificates on the Internet at Industry online support portal (http://www.siemens.com/processinstrumentation/certificates) or on an included DVD.

E.2 Technical support

Technical Support

If this documentation does not provide complete answers to any technical questions you may have, contact Technical Support at:

- Support request (http://www.siemens.com/automation/support-request)
- More information about our Technical Support is available at Technical Support (http://www.siemens.com/automation/csi/service)

Internet Service & Support

In addition to our documentation, Siemens provides a comprehensive support solution at:

- Services & Support (http://www.siemens.com/automation/service&support)

Personal contact

If you have additional questions about the device, please contact your Siemens personal contact at:

- Partner (http://www.automation.siemens.com/partner)

To find the personal contact for your product, go to "All Products and Branches" and select "Products & Services > Industrial Automation > Process Instrumentation".

Documentation

You can find documentation on various products and systems at:

- Instructions and manuals (http://www.siemens.com/processinstrumentation/documentation)

E.3 QR code label

A QR code label can be found on the device. With the use of a smart phone, the QR code provides a direct link to a website with information specific to the device, such as manuals, FAQs, certificates, etc.

Certification documents including calibration report are supplied with each sensor included on the SensorFlash. Material, pressure test, and factory conformance certificates are optional at ordering.

Note

EAC declaration

The EAC declaration is available on the SensorFlash SD card delivered with the device.

HMI menu structure

F

How to read the tables

In the following tables the menus are entered in **bold** text and the parameters in *italic*.

The first table shows the main HMI menu, that is HMI menu levels 1 and 2. The following tables show the HMI submenus, that is HMI menu levels 3 to 5.

The visibility of some parameter/menu items depends on previous selections. For example, if Frequency is selected on the output, only the frequency setup parameter/menu items are visible, and the current, pulse, and status output setup parameter/menu items are hidden.

F.1 Main menu

In the following table only the menus and parameters of the first two levels of the HMI menu structure are listed.

Table F-1 Main menu

Level 1		Level 2		More information
No.	Name	No.	Name	
1	**Quick Start**	1.1	**Quick Commissioning**	Quick Commissioning wizard (menu item 1.1) (Page 95)
		1.2	**Zero Point Adjustment**	Zero point adjustment (Page 96)
		1.3	**Process Values**	Process Values wizard (menu item 1.3) (Page 101)
		1.4	**Inputs and outputs**	Menu item 2.4: Inputs and outputs (Page 256)
		1.5	**Gas Application**	Gas Application wizard (menu item 1.5) (Page 106)
		1.6	**Pulsating Flow**	Pulsating Flow wizard (menu item 1.6) (Page 107)
		1.7	**Dosing Application**	Dosing Application wizard (menu item 1.7) (Page 108)
		1.8	**Copy configuration**	How do I copy application setup from one device to another? (Page 185)
		1.9	**Communication**	Menu item 4: Communication (Page 280)

Level 1		Level 2		More information
No.	Name	No.	Name	
2	Setup	2.1	Sensor	Menu item 2.1: Sensor (Page 251)
		2.2	Process values	Menu item 2.2: Process values (Page 252)
		2.3	Totalizer	Menu item 2.3: Totalizer (Page 255)
		2.4	Inputs and outputs	Menu item 2.4: Inputs and outputs (Page 256)
		2.5	Dosing	Menu item 2.5: Dosing (Page 263)
		2.7	Date and time	Menu item 2.7: Date and time (Page 268)
		2.8	Local display	Menu item 2.8: Local display (Page 269)
3	Maintenance & Diagnostics	3.1	Identification	Menu item 3.1: Identification (Page 271)
		3.2	Diagnostic events	Menu item 3.2: Diagnostic events (Page 272)
		3.3	Maintenance	Menu item 3.3: Maintenance (Page 273)
		3.4	Diagnostics	Menu item 3.3: Maintenance (Page 273)
		3.5	Peak values	Menu item 3.4: Diagnostics (Page 273)
		3.6	Charateristics	Menu item 3.6: Characteristics (Page 275)
		3.7	Sensor flash	Menu item 3.7: SensorFlash (Page 276)
		3.8	Simulation	Menu item 3.8: Simulation (Page 278)
		3.9	Audit trail	Menu item 3.9: Audit trail (Page 279)
		3.10	Self test	Menu item 3.10: Self test (Page 279)
		3.11	Resets	Menu item 3.11: Resets (Page 280)
		3.12	Firmware update	Menu item 3.12: Firmware update (Page 280)
4	Communication	*4.1*	*USB (Service channel)*	
		4.2	*HART (channel 1)*	
		4.3	*Modbus (channel 1)*	
		4.4	*Profibus DP/PA*	
5	Security	5.1	Change user PIN	Menu item 5.1: Change User PIN
		5.2	Change expert PIN	Menu item 5.1: Change expert
		5.3	Recovery ID	Menu item 5.1: Recovery ID
		5.4	PIN recovery	Menu item 5.1: PIN recovery
		5.5	Activate user PIN	Menu item 5.1: Activate user PIN
		5.6	Deactivate user PIN	Menu item 5.1: Deactivate user PIN
		5.7	Auto logout	Menu item 5.1: Auto logout
		5.8	Logout	Menu item 5.1: Logout
6	*Language*			

See also

Menu item 5: Security (Page 282)

F.2 Menu item 2.1: Sensor

Table F-2 Basic settings

Level 1		Level 2		More information
No.	Name	No.	Name	
2.1.1	Flow direction			
2.1.2	Noise damping			
2.1.3	Zero point adjustment			
		2.1.3.1	*Select zero point adjustment*	
		2.1.3.2	*Zero point adjustment*	
		2.1.3.3	*Duration*	
		2.1.3.4	*Standard deviation limit*	
		2.1.3.5	*Standard deviation*	
		2.1.3.6	*Offset limit*	
		2.1.3.7	*Offset*	
		2.1.3.8	*Offset*	
2.1.4	Aerated flow	2.1.4.1	*Aerated flow filter*	
		2.1.4.2	*Filter time constant*	
		2.1.4.3	*Alarm limit*	
		2.1.4.4	*Warning limit*	
		2.1.4.5	*Measurement sample Time*	
		2.1.4.6	*Filter hysteresis*	
		2.1.4.7	*Minimum filter time*	
		2.1.4.8	*Filter iteration*	
		2.1.4.9	*Bandwidth factor*	
		2.1.4.10	*Filter pole shift*	

F.3 Menu item 2.2: Process values

Table F-3 Process values

Level 3		Level 4		Level 5	
No.	Name	No.	Name	No.	Name
2.2.1	Mass flow	*2.2.1.1*	*Units*		
		2.2.1.2	*Custom units*		
		2.2.1.3	*Custom conversion factor*		
		2.2.1.4	*Decimal places*		
		2.2.1.5	*Low flow cut-off*		
		2.2.1.6	Alarm and warning limits	*2.2.1.6.1*	*Upper alarm limit*
				2.2.1.6.2	*Upper warning limit*
				2.2.1.6.3	*Lower warning limit*
				2.2.1.6.4	*Lower alarm limit*
				2.2.1.6.5	*Hysteresis*
		2.2.1.7	Flow adjustment	*2.2.1.7.1*	*Adjustment factor*
2.2.2	Volume flow	*2.2.2.1*	*Units*		
		2.2.2.2	*Custom units*		
		2.2.2.3	*Custom conversion factor*		
		2.2.2.4	*Decimal places*		
		2.2.2.5	*Low flow cut-off*		
		2.2.2.6	Alarm and warning limits	*2.2.2.6.1*	*Upper alarm limit*
				2.2.2.6.2	*Upper warning limit*
				2.2.2.6.3	*Lower warning limit*
				2.2.2.6.4	*Lower alarm limit*
				2.2.2.6.5	*Hysteresis*

Level 3		Level 4		Level 5	
No.	Name	No.	Name	No.	Name
2.2.3	Standard Volumeflow	*2.2.3.1*	*Units*		
		2.2.3.2	*Custom units*		
		2.2.3.3	*Custom conversion factor*		
		2.2.3.4	*Decimal places*		
		2.2.3.5	Alarm and warning limits	*2.2.3.5.1*	*Upper alarm limit*
				2.2.3.5.2	*Upper warning limit*
				2.2.3.5.3	*Lower warning limit*
				2.2.3.5.4	*Lower alarm limit*
				2.2.3.5.5	*Hysteresis*
		2.2.3.6	*Standard density*	*2.2.3.6.1*	*Unit*
				2.2.3.6.2	*Standard volume flow mode*
				2.2.3.6.3	*Fixed standard density*
				2.2.3.6.4	*Linear expansion coeff.*
				2.2.3.6.5	*Square expansion coeff.*
				2.2.3.6.6	*Standard temperature*
				2.2.3.6.7	*Upper alarm limit standard density*
				2.2.3.6.8	*Upper alarm limit standard density*
				2.2.3.6.9	*Lower alarm limit standard density*
				2.2.3.6.10	*Lower alarm limit standard density*
				2.2.3.6.11	*Alarm hysteresis standard density*
2.2.5	Density	*2.2.5.1*	*Units*		
		2.2.5.2	*Custom units*		
		2.2.5.3	*Custom conversion factor*		
		2.2.5.4	*Decimal places*		
		2.2.5.5	Alarm and warning limits	*2.2.5.5.1*	*Upper alarm limit*
				2.2.5.5.2	*Upper warning limit*
				2.2.5.5.3	*Lower warning limit*
				2.2.5.5.4	*Lower alarm limit*
				2.2.5.5.5	*Hysteresis*
		2.2.5.6	Density adjustment	*2.2.5.6.1*	*Adjustment Factor*
				2.2.5.6.3	*Fraction offset*
		2.2.5.7	*Empty tube detection*		
		2.2.5.8	*Empty tube limit*		

Level 3		Level 4		Level 5	
No.	Name	No.	Name	No.	Name
2.2.6	Medium temperature	*2.2.6.1*	*Units*		
		2.2.6.2	*Decimal places*		
		2.2.6.3	Alarm and warning limits	*2.2.6.5.1*	*Upper alarm limit*
				2.2.6.5.2	*Upper warning limit*
				2.2.6.5.3	*Lower warning limit*
				2.2.6.5.4	*Lower alarm limit*
				2.2.6.5.5	*Hysteresis*
2.2.7	Fraction	*2.2.7.1*	*Measurement Mode*		
		2.2.7.2	*Unit*		
		2.2.7.3	*Active fraction table*		
		2.2.7.4	*Fraction Name*		
		2.2.7.5	Fraction A	*2.2.7.5.1*	Fraction A label
				2.2.7.5.2	*Upper Limit Alarm*
				2.2.7.5.3	*Upper Limit Warning*
				2.2.7.5.4	*Lower Limit Warning*
				2.2.7.5.5	*Lower Limit Alarm*
				2.2.7.5.6	*Alarm Hysteresis*
				2.2.7.5.7	*Decimal Places*
		2.2.7.6	Fraction B	*2.2.7.6.1*	Fraction B label
				2.2.7.6.2	*Upper Limit Alarm*
				2.2.7.6.3	*Upper Limit Warning*
				2.2.7.6.4	*Lower Limit Warning*
				2.2.7.6.5	*Lower Limit Alarm*
				2.2.7.6.6	*Alarm Hysteresis*
				2.2.7.6.7	*Decimal Places*
		2.2.7.7	Fraction A %	*2.2.7.7.1*	*Upper Limit Alarm*
				2.2.7.7.2	*Upper Limit Warning*
				2.2.7.7.3	*Lower Limit Warning*
				2.2.7.7.4	*Lower Limit Alarm*
				2.2.7.7.5	*Alarm Hysteresis*
				2.2.7.7.6	*Decimal Places*
		2.2.7.8	Fraction B %	*2.2.7.8.1*	*Upper Limit Alarm*
				2.2.7.8.2	*Upper Limit Warning*
				2.2.7.8.3	*Lower Limit Warning*
				2.2.7.8.4	*Lower Limit Alarm*
				2.2.7.8.5	*Alarm Hysteresis*
				2.2.7.8.6	*Decimal Places*
		2.2.7.9	Fraction Adjustment	*2.2.7.9.1*	*Adjustment Factor*
				2.2.7.9.2	*Fraction offset*

F.4 Menu item 2.3: Totalizer

Table F-4 Totalizers

Level 3		Level 4		Level 5	
No.	Name	No.	Name	No.	Name
2.3.1	Totalizer 1	*2.3.1.1*	*Process value*		
		2.3.1.2	*Unit*		
		2.3.1.3	*Custom units*		
		2.3.1.4	*Custom conversion factor*		
		2.3.1.5	*Decimal places*		
		2.3.1.6	*Flow direction*		
		2.3.1.7	*Fail safe behaviour*		
		2.3.1.8	*Reset*		
		2.3.1.9	*Preset*		
		2.3.1.10	Alarm and warning limits	2.3.1.10.1	*Upper alarm limit*
				2.3.1.10.2	*Upper warning limit*
				2.3.1.10.3	*Lower warning limit*
				2.3.1.10.4	*Lower alarm limit*
				2.3.1.10.5	*Hysteresis*
2.3.2	Totalizer 2	*2.3.2.1*	*Process Value*		
		2.3.2.2	*Unit*		
		2.3.2.3	*Custom units*		
		2.3.2.4	*Custom conversion factor*		
		2.3.2.5	*Decimal places*		
		2.3.2.6	*Flow direction*		
		2.3.2.7	*Fail safe behaviour*		
		2.3.2.8	*Lower Limit Alarm*		
		2.3.2.9	*Alarm Hysteresis*		
		2.3.2.10	*Reset*		
		2.3.2.11	*Preset*		
		2.3.2.10	Alarm and warning limits	2.3.2.10.1	*Upper alarm limit*
				2.3.2.10.2	*Upper warning limit*
				2.3.2.10.3	*Lower warning limit*
				2.3.2.10.4	*Lower alarm limit*
				2.3.2.10.5	*Hysteresis*

Level 3		Level 4		Level 5	
No.	Name	No.	Name	No.	Name
2.3.3	Totalizer 3	*2.3.3.1*	*Process Value*		
		2.3.3.2	*Unit*		
		2.3.3.3	*Custom units*		
		2.3.3.4	*Custom conversion factor*		
		2.3.3.5	*Decimal places*		
		2.3.3.6	*Flow direction*		
		2.3.3.7	*Fail safe behaviour*		
		2.3.3.8	*Lower Limit Alarm*		
		2.3.3.9	*Alarm Hysteresis*		
		2.3.3.10	*Reset*		
		2.3.3.11	*Preset*		
				2.3.3.10.2	*Upper warning limit*
				2.3.3.10.3	*Lower warning limit*
				2.3.3.10.4	*Lower alarm limit*
				2.3.3.10.5	*Hysteresis*
2.3.4	*Reset All Totalizers*				

F.5 Menu item 2.4: Inputs and outputs

Table F-5 Current output on CH1

Level 3		Level 4		Level 5	
No.	Name	No.	Name	No.	Name
2.4.1	CH1 - output with HART	*2.4.1.1*	*Loop current mode*		
		2.4.1.2	*Active operation*		
		2.4.1.3	*PV selection*		
		2.4.1.4	*Direction*		
		2.4.1.5	*Loop current scale*		
		2.4.1.6	*Upper range value*		
		2.4.1.7	*Lower range value*		
		2.4.1.8	*Fail safe activation condition*		
		2.4.1.9	*Damping value*		
		2.4.1.10	*Fail-safe Behaviour*		
		2.4.1.11	*Fail Safe Value*		
		2.4.1.12	*Fail-safe minimum duration*		

Note

Menu item visibility

The availability in the HMI of the menu items for channels 2, 3 and 4 depend on the I/O configuration.

Table F-6 Signal output on CH2

Level 3		Level 4		Level 5	
No.	Name	No.	Name	No.	Name
2.4.2	CH2 - output	*2.4.2.1*	*Operation mode*		
		2.4.2.3	*Active operation*		
		2.4.2.4	*Fail-safe activation condition*		
		2.4.2.5	Current output	2.4.2.5.1	*Process value*
				2.4.2.5.2	*Flow direction*
				2.4.2.5.3	*Loop current scale*
				2.4.2.5.4	*Upper range value*
				2.4.2.5.5	*Lower range value*
				2.4.2.5.6	*Damping value*
				2.4.2.5.7	*Fail-safe behavior*
				2.4.2.5.8	*Fail-safe value*
				2.4.2.5.9	*Fail-safe minimum duration*
		2.4.2.6	Frequency output	2.4.2.6.1	*Process value*
				2.4.2.6.2	*Flow direction*
				2.4.2.6.3	*Upper frequency value*
				2.4.2.6.4	*Lower frequency value*
				2.4.2.6.5	*Upper range value*
				2.4.2.6.6	*Lower range value*
				2.4.2.6.7	*Damping value*
				2.4.2.6.8	*Fail-safe behavior*
				2.4.2.6.9	*Fail-safe value*
				2.4.2.6.10	*Fail-safe minimum duration*
		2.4.2.7	Pulse output	2.4.2.7.1	*Process value*
				2.4.2.7.2	*Flow direction*
				2.4.2.7.3	*Pulse units*
				2.4.2.7.4	*Amount*
				2.4.2.7.5	*Pulses per amount*
				2.4.2.7.6	*Pulse width units*
				2.4.2.6.7	*Pulse width*
				2.4.2.7.8	*Polarity*
				2.4.2.7.9	*Fail-safe behavior*
				2.4.2.7.10	*Fail-safe value*
				2.4.2.7.11	*Fail-safe minimum duration*
		2.4.2.8	Digital output	2.4.2.8.1	*Mode*
				2.4.2.8.2	*Sensor alarms (group 1)*
				2.4.2.8.3	*Sensor alarms (group 2)*
				2.4.2.8.4	*Process alarms (1)*
				2.4.2.8.5	*Process alarms (2)*
				2.4.2.8.8	*Totalizers alarms*
				2.4.2.8.9	*Device alarms*

Level 3		Level 4		Level 5	
No.	Name	No.	Name	No.	Name
				2.4.2.8.10	*Channel 1 alarms*
				2.4.2.8.11	*Input/output alarms (1)*
				2.4.2.8.13	*Simulation alarms (1)*
				2.4.2.8.14	*Simulation alarms (2)*
				2.4.2.8.15	*Alarm class*
				2.4.2.8.16	*NAMUR status signal*
				2.4.2.8.17	*Polarity*
				2.4.2.8.18	*On-delay*
				2.4.2.8.19	*Off-delay*

Table F-7 Input/output on CH3

Level 3		Level 4		Level 5	
No.	Name	No.	Name	No.	Name
2.4.3	CH3 - input/output	*2.4.3.1*	*Operation mode*		
		2.4.3.3	*Active operation*		
		2.4.3.4	*Fail-safe activation condition*		
		2.4.3.5	Current Output	2.4.3.5.1	*Process value*
				2.4.3.5.2	*Flow direction*
				2.4.3.5.3	*Loop current scale*
				2.4.3.5.4	*Upper range value*
				2.4.3.5.5	*Lower range value*
				2.4.3.5.6	*Damping value*
				2.4.3.5.7	*Fail-safe behavior*
				2.4.3.5.8	*Fail-safe value*
				2.4.3.5.9	*Fail-safe minimum duration*
		2.4.3.6	Frequency output	2.4.3.6.1	*Redundancy mode*
				2.4.3.6.2	*Process value*
				2.4.3.6.2	*Flow direction*
				2.4.3.6.4	*Upper frequency value*
				2.4.3.6.5	*Lower frequency value*
				2.4.3.6.6	*Upper range value*
				2.4.3.6.7	*Lower range value*
				2.4.3.6.8	*Damping value*
				2.4.3.6.9	*Fail-safe behavior*
				2.4.3.6.10	*Fail-safe value*
				2.4.3.6.11	*Fail-safe minimum duration*
		2.4.3.7	Pulse output	2.4.3.7.1	*Redundancy mode*
				2.4.3.7.2	*Process value*
				2.4.3.7.3	*Flow direction*
				2.4.3.7.4	*Pulse units*
				2.4.3.7.5	*Amount*
				2.4.3.7.6	*Pulses per amount*
				2.4.3.7.7	*Pulse width units*
				2.4.3.7.8	*Pulse width*
				2.4.3.7.9	*Polarity*
				2.4.3.7.10	*Fail-safe behavior*
				2.4.3.7.11	*Fail-safe value*
				2.4.3.7.12	*Fail-safe minimum duration*
		2.4.3.8	Digital output	2.4.3.8.1	*Mode*
				2.4.3.8.2	*Sensor alarms (group 1)*
				2.4.3.8.3	*Sensor alarms (group 2)*
				2.4.3.8.4	*Process alarms (1)*
				2.4.3.8.5	*Process alarms (2)*

Level 3		Level 4		Level 5	
No.	Name	No.	Name	No.	Name
				2.4.3.8.8	*Totalizers alarms*
				2.4.3.8.9	*Device alarms*
				2.4.3.8.10	*Channel 1 alarms*
				2.4.3.8.11	*Input/output alarms (1)*
				2.4.3.8.13	*Simulation alarms (1)*
				2.4.3.8.14	*Simulation alarms (2)*
				2.4.3.8.15	*Alarm class*
				2.4.3.8.16	*NAMUR status signal*
				2.4.3.8.17	*Polarity*
				2.4.3.8.18	*On-delay*
				2.4.3.8.19	*Off-delay*
		2.4.3.9	Digital input	2.4.3.9.1	*Input function*
				2.4.3.9.2	*CH1 forced current value*
				2.4.3.9.3	*CH2 forced current value*
				2.4.3.9.4	*CH3 forced current value*
				2.4.3.9.5	*CH4 forced current value*
				2.4.3.9.6	*Debounce time*
				2.4.3.9.7	*Polarity*
2.4.4	CH3 - relay	*2.4.4.1*	*Operation Mode*		
		2.4.4.2	*Mode*		
		2.4.4.3	*Sensor alarms (group 1)*		
		2.4.4.4	*Sensor alarms (group 2)*		
		2.4.4.5	*Process alarms (1)*		
		2.4.4.6	*Process alarms (2)*		
		2.4.4.9	*Totalizers alarms*		
		2.4.4.10	*Device alarms*		
		2.4.4.11	*Channel 1 alarms*		
		2.4.4.12	*Input/output alarms (1)*		
		2.4.4.14	*Simulation alarms (1)*		
		2.4.4.15	*Simulation alarms (2)*		
		2.4.4.16	*Alarm class*		
		2.4.4.17	*NAMUR status signal*		
		2.4.4.18	*Polarity*		
		2.4.4.19	*On-delay*		
		2.4.4.20	*Off-delay*		

Table F-8 Input/output on CH4

Level 3		Level 4		Level 5	
No.	Name	No.	Name	No.	Name
2.4.4	CH4 - input/output	*2.4.5.1*	*Operation Mode*		
		2.4.5.3	*Active operation*		
		2.4.5.4	*Fail-safe activation condition*		
		2.4.5.5	Current output	2.4.5.4.1	*Process value*
				2.4.5.4.2	*Flow direction*
				2.4.5.4.3	*Loop current scale*
				2.4.5.4.4	*Upper range value*
				2.4.5.4.5	*Lower range value*
				2.4.5.4.6	*Damping value*
				2.4.5.4.7	*Fail-safe behavior*
				2.4.5.4.8	*Fail-safe value*
				2.4.5.4.9	*Fail-safe minimum duration*
		2.4.5.6	Frequency output	2.4.5.6.1	*Process value*
				2.4.5.6.2	*Flow direction*
				2.4.5.6.3	*Upper frequency value*
				2.4.5.6.4	*Lower frequency value*
				2.4.5.6.5	*Upper range value*
				2.4.5.6.6	*Lower range value*
				2.4.5.6.7	*Damping value*
				2.4.5.6.8	*Fail-safe behavior*
				2.4.5.6.9	*Fail-safe value*
				2.4.5.6.10	*Fail-safe minimum duration*

Level 3		Level 4		Level 5	
No.	Name	No.	Name	No.	Name
		2.4.5.7	Pulse output	2.4.5.7.1	*Process value*
				2.4.5.7.2	*Flow direction*
				2.4.5.7.3	*Pulse units*
				2.4.5.7.4	*Amount*
				2.4.5.7.5	*Pulses per amount*
				2.4.5.7.6	*Pulse width units*
				2.4.5.7.7	*Pulse width*
				2.4.5.7.8	*Polarity*
				2.4.5.7.9	*Fail-safe behavior*
				2.4.5.7.10	*Fail-safe value*
				2.4.5.7.11	*Fail-safe minimum duration*
		2.4.5.8	Digital output	2.4.5.8.1	*Mode*
				2.4.5.8.2	*Sensor alarms (group 1)*
				2.4.5.8.3	*Sensor alarms (group 2)*
				2.4.5.8.4	*Process alarms (1)*
				2.4.5.8.5	*Process alarms (2)*
				2.4.5.8.8	*Totalizers alarms*
				2.4.5.8.9	*Device alarms*
				2.4.5.8.10	*Channel 1 alarms*
				2.4.5.8.11	*Input/output alarms (1)*
				2.4.5.8.13	*Simulation alarms (1)*
				2.4.5.8.14	*Simulation alarms (2)*
				2.4.5.8.15	*Alarm class*
				2.4.5.8.16	*NAMUR status signal*
				2.4.5.8.17	*Polarity*
				2.4.5.8.18	*On-delay*
				2.4.5.8.19	*Off-delay*
		2.4.5.9	Digital input	2.4.5.9.1	*Input function*
				2.4.5.9.2	*CH1 forced current value*
				2.4.5.9.3	*CH2 forced current value*
				2.4.5.9.4	*CH3 forced current value*
				2.4.5.9.5	*CH4 forced current value*
				2.4.5.9.6	*Debounce time*
				2.4.5.9.7	*Polarity*

Level 3		Level 4		Level 5	
No.	Name	No.	Name	No.	Name
2.4.6	CH4 - relay	*2.4.6.1*	*Operation Mode*		
		2.4.6.2	*Mode*		
		2.4.6.3	*Sensor alarms (group 1)*		
		2.4.6.4	*Sensor alarms (group 2)*		
		2.4.6.5	*Process alarms (1)*		
		2.4.6.6	*Process alarms (2)*		
		2.4.6.9	*Totalizers alarms*		
		2.4.6.10	*Device alarms*		
		2.4.6.11	*Channel 1 alarms*		
		2.4.6.12	*Input/output alarms (1)*		
		2.4.6.14	*Simulation alarms (1)*		
		2.4.6.15	*Simulation alarms (2)*		
		2.4.6.16	*Alarm class*		
		2.4.6.17	*NAMUR status signal*		
		2.4.6.18	*Polarity*		
		2.4.6.19	*On-delay*		
		2.4.6.20	*Off-delay*		

F.6 Menu item 2.5: Dosing

Table F-9 Dosing

Level 3		Level 4		Level 5	
No.	Name	No.	Name	No.	Name
2.5.1	*Dosing mode*				
2.5.2	*Process value*				
2.5.3	*Active recipe*				

Table F-10 Recipe 1

Level 3		Level 4		Level 5	
No.	Name	No.	Name	No.	Name
2.5.5	Recipe 1	*2.5.5.1*	*Name*		
		2.5.5.2	*Unit*		
		2.5.5.3	*Amount*		
		2.5.5.4	*Decimal Places*		
		2.5.5.5	User calibration	*2.5.5.5.2*	*Fixed compensation*
		2.5.5.6	Valve Control	*2.5.5.6.1*	*Stage Setup Format*
				2.5.5.6.2	*Value to open primary valve*
				2.5.5.6.3	*Value to close primary valve*
				2.5.5.6.4	*Value to open secondary valve*
				2.5.5.6.5	*Value to close secondary valve*
				2.5.5.6.6	*Current value to close*
				2.5.5.6.7	*Current value to partially open*
				2.5.5.6.8	*Current value to fully open*
				2.5.5.6.9	*Amount for fully open*
				2.5.5.6.10	*Amount for partially open*
		2.5.5.7	Fault Handling	*2.5.5.7.1*	*Duration Mode*
				2.5.5.7.2	*Duration Time*
				2.5.5.7.3	*Overrun Mode*
				2.5.5.7.4	*Overrun Value*

Table F-11 Recipe 2

Level 3		Level 4		Level 5	
No.	Name	No.	Name	No.	Name
2.5.6	Recipe 2	2.5.6.1	*Name*		
		2.5.6.2	*Unit*		
		2.5.6.3	*Amount*		
		2.5.6.4	*Decimal Places*		
		2.5.6.5	User calibration	*2.5.6.5.2*	*Fixed Compensation*
		2.5.6.6	Valve Control	*2.5.6.6.1*	*Stage Setup Format*
				2.5.6.6.2	*Value to open primary valve*
				2.5.6.6.3	*Value to close primary valve*
				2.5.6.6.4	*Value to open secondary valve*
				2.5.6.6.5	*Value to close secondary valve*
				2.5.6.6.6	*Current value to close*
				2.5.6.6.7	*Current value to partially open*
				2.5.6.6.8	*Current value to fully open*
				2.5.6.6.9	*Amount for fully open*
				2.5.6.6.10	*Amount for partially open*
		2.5.6.7	Fault Handling	*2.5.6.7.1*	*Duration Mode*
				2.5.6.7.2	*Duration Time*
				2.5.6.7.3	*Overrun Mode*
				2.5.6.7.4	*Overrun Value*

Table F-12 Recipe 3

Level 3		Level 4		Level 5	
No.	Name	No.	Name	No.	Name
2.5.7	Recipe 3	*2.5.7.1*	*Name*		
		2.5.7.2	*Unit*		
		2.5.7.3	*Amount*		
		2.5.7.4	*Decimal Places*		
		2.5.7.5	Calibration	*2.5.7.5.2*	*Fixed compensation*
		2.5.7.6	Valve Control	*2.5.7.6.1*	*Stage Setup Format*
				2.5.7.6.2	*Value to open primary valve*
				2.5.7.6.3	*Value to close primary valve*
				2.5.7.6.4	*Value to open secondary valve*
				2.5.7.6.5	*Value to close secondary valve*
				2.5.7.6.6	*Current value to close*
				2.5.7.6.7	*Current value to partially open*
				2.5.7.6.8	*Current value to fully open*
				2.5.7.6.9	*Amount for fully open*
				2.5.7.6.10	*Amount for partially open*
		2.5.7.7	Fault Handling	*2.5.7.7.1*	*Duration Mode*
				2.5.7.7.2	*Duration Time*
				2.5.7.7.3	*Overrun Mode*
				2.5.7.7.4	*Overrun Value*

Table F-13 Recipe 4

Level 3		Level 4		Level 5	
No.	Name	No.	Name	No.	Name
2.5.8	Recipe 4	*2.5.8.1*	*Name*		
		2.5.8.2	*Unit*		
		2.5.8.3	*Amount*		
		2.5.8.4	*Decimal Places*		
		2.5.8.5	User calibration	*2.5.8.5.2*	*Fixed Compensation*
		2.5.8.6	Valve Control	*2.5.8.6.1*	*Stage Setup Format*
				2.5.8.6.2	*Value to open primary valve*
				2.5.8.6.3	*Value to close primary valve*
				2.5.8.6.4	*Value to open secondary valve*
				2.5.8.6.5	*Value to close secondary valve*
				2.5.8.6.6	*Current value to close*
				2.5.8.6.7	*Current value to partially open*
				2.5.8.6.8	*Current value to fully open*
				2.5.8.6.9	*Amount for fully open*
				2.5.8.6.10	*Amount for partially open*
		2.5.8.7	Fault Handling	*2.5.8.7.1*	*Duration Mode*
				2.5.8.7.2	*Duration Time*
				2.5.8.7.3	*Overrun Mode*
				2.5.8.7.4	*Overrun Value*

Table F-14 Recipe 5

Level 3		Level 4		Level 5	
No.	Name	No.	Name	No.	Name
2.5.9	Recipe 5	*2.5.9.1*	*Name*		
		2.5.9.2	*Unit*		
		2.5.9.3	*Amount*		
		2.5.9.4	*Decimal Places*		
		2.5.9.5	Calibration	*2.5.9.5.4*	*Offset Adjustment*
		2.5.9.6	Valve Control	*2.5.9.6.1*	*Stage Setup Format*
				2.5.9.6.2	*Value to open primary valve*
				2.5.9.6.3	*Value to close primary valve*
				2.5.9.6.4	*Value to open secondary valve*
				2.5.9.6.5	*Value to close secondary valve*
				2.5.9.6.6	*Current value to close*
				2.5.9.6.7	*Current value to partially open*
				2.5.9.6.8	*Current value to fully open*
				2.5.9.6.9	*Amount for fully open*
				2.5.9.6.10	*Amount for partially open*
		2.5.9.7	Fault Handling	*2.5.9.7.1*	*Duration Mode*
				2.5.9.7.2	*Duration Time*
				2.5.9.7.3	*Overrun Mode*
				2.5.9.7.4	*Overrun Value*

F.7 Menu item 2.7: Date and time

Table F-15 Date and time

Level 3		Level 4		Level 5	
No.	Name	No.	Name	No.	Name
2.7.1	*Current data and time*				
2.7.2	*Set date and time*				

F.8 Menu item 2.8: Local display

Table F-16 Display

Level 3		Level 4		Level 5	
No.	Name	No.	Name	No.	Name
2.8.1	*Brightness*				
2.8.2	*Backlight*				
2.8.3	*Contrast*				
2.8.5	**View 1**	*2.8.5.1*	Type		
		2.8.5.2	*1st value*		
		2.8.5.3	*2nd value*		
		2.8.5.4	*3d value*		
		2.8.5.5	*4th value*		
		2.8.5.6	*5th value*		
		2.8.5.7	*6th value*		
		2.8.5.8	*Scale mode*		
		2.8.5.9	*Log time window*		
		2.8.5.10	*Scale lower limit*		
		2.8.5.11	*Scale upper limit*		
2.8.6	**View 2**	*2.8.6.1*	*Enable or disable*		
		2.8.6.2	*Type*		
		2.8.6.3	*1st value*		
		2.8.6.4	*2nd value*		
		2.8.6.5	*3d value*		
		2.8.6.6	*4th value*		
		2.8.6.7	*5th value*		
		2.8.6.8	*6th value*		
		2.8.6.9	*Scale mode*		
		2.8.6.10	*Log time window*		
		2.8.6.11	*Scale lower limit*		
		2.8.6.12	*Scale upper limit*		
2.8.7	**View 3**	*2.8.7.1*	*Enable or disable*		
		2.8.7.2	*Type*		
		2.8.7.3	*1st value*		
		2.8.7.4	*2nd value*		
		2.8.7.5	*3d value*		
		2.8.7.6	*4th value*		
		2.8.7.7	*5th value*		
		2.8.7.8	*6th value*		
		2.8.7.9	*Scale mode*		
		2.8.7.10	*Log time window*		
		2.8.7.11	*Scale lower limit*		
		2.8.7.12	*Scale upper limit*		

Level 3		Level 4		Level 5	
No.	Name	No.	Name	No.	Name
2.8.8	View 4	*2.8.7.1*	*Enable or disable*		
		2.8.7.2	*Type*		
		2.8.7.3	*1st value*		
		2.8.7.4	*2nd value*		
		2.8.7.5	*3rd value*		
		2.8.7.6	*4th value*		
		2.8.7.7	*5th value*		
		2.8.7.8	*6th value*		
		2.8.7.9	*Scale mode*		
		2.8.7.10	*Log time window*		
		2.8.8.11	*Scale lower limit*		
		2.8.8.12	*Scale upper limit*		
2.8.9	View 5	*2.8.9.1*	*Enable or disable*		
		2.8.9.2	*Type*		
		2.8.9.3	*1st value*		
		2.8.9.4	*2nd value*		
		2.8.9.5	*3rd value*		
		2.8.9.6	*4th value*		
		2.8.9.7	*5th value*		
		2.8.9.8	*6th value*		
		2.8.9.9	*Scale mode*		
		2.8.9.10	*Log time window*		
		2.8.9.11	*Scale lower limit*		
		2.8.9.12	*Scale upper limit*		
2.8.10	View 6	*2.8.10.1*	*Enable or disable*		
		2.8.10.2	*Type*		
		2.8.10.3	*1st value*		
		2.8.10.4	*2nd value*		
		2.8.10.5	*3rd value*		
		2.8.10.6	*4th value*		
		2.8.10.7	*5th value*		
		2.8.10.8	*6th value*		
		2.8.10.9	*Scale mode*		
		2.8.10.10	*Log time window*		
		2.8.10.11	*Scale lower limit*		
		2.8.10.12	*Scale upper limit*		
2.8.11	Status icons				

F.9 Menu item 3.1: Identification

Table F-17 Identification

Level 3		Level 4		Level 5	
No.	Name	No.	Name	No.	Name
3.1.1	*Long tag*				
3.1.2	*Descriptor*				
3.1.3	*Message*				
3.1.4	*Location*				
3.1.5	*Installation date*				
3.1.6	*Manufacturer*				
3.1.7	*Product name*				
3.1.8	*Product variant*				
3.1.9	*Order number*				
3.1.10	*Serial number*				
3.1.11	*FW revision*				
3.1.12	*HW revision*				
3.1.13	*Final assembly number*				
3.1.15	Transmitter electronics	*3.1.15.1*	HW version		
		3.1.15.2	FW version		
		3.1.15.3	*Serial number*		
		3.1.15.4	*Order number*		
		3.1.15.5	*Communication interface HW version*		
		3.1.15.6	*Communication interface serial number*		
3.1.16	Local display	*3.1.16.1*	*HW version*		
		3.1.15.2	*FW version*		
		3.1.15.3	*HMI cfg. version*		
3.1.17	I/O electronics	*3.1.17.1*	*HW version*		
		3.1.17.2	*FW version*		
		3.1.17.3	*Serial number*		
3.1.19	Sensor	*3.1.19.1*	*Type*		
		3.1.19.2	*Size*		
		3.1.19.3	*Order number*		
		3.1.19.4	*Serial number*		

F.10 Menu item 3.2: Diagnostic events

Table F-18 Diagnostic events

Level 3		Level 4		Level 5	
No.	Name	No.	Name	No.	Name
3.2.1	*Active diagnostic events*				
3.2.2	*Diagnostic log*				
3.2.3	*Clear diagnostic log*				
3.2.4	*Alarm acknowledge mode*				
3.2.5	*Transmitter detailed events*				
3.2.6	*Suppression time*				
3.2.7	Enable alarms	*3.2.7.3*	*Process alarms (group 1)*		
		3.2.7.4	*Process alarms (group 2)*		
		3.2.7.7	*Totalizers events*		
		3.2.7.8	*Device events*		
		3.2.7.9	*Simulation alarms (group 1)*		
		3.2.7.10	*Simulation alarms (group 2)*		
		3.2.7.11	*Input/output alarms (group 1)*		
		3.2.7.13	*Dosing alarms*		
3.2.8	Alarm class assignment	3.2.8.8	*148 Transm. temp above alarm limit*		
		3.2.8.9	*149 Transm. temp above alarm limit*		

Note

Transmitter Detail Alarms

Menu item 3.2.7 (Transmitter Detail Alarms) is only visible in case an alarm with detailed alarm information is pending.

F.11 Menu item 3.3: Maintenance

Table F-19 Maintenance

Level 3		Level 4		Level 5	
No.	Name	No.	Name	No.	Name
3.3.1	*Copy configuration*				
3.3.2	Spare part replacement	3.3.2.1	Transmitter	*3.3.2.1.1*	*Replace transmitter*
				3.3.2.1.2	*Replace transmitter cassette*
				3.3.2.1.3	*Replace sensor cassette (Compact)*
		3.3.2.2	Sensor	*3.3.7.2.1*	*Replace DSL*
				3.3.7.2.2	*Replace sensor cassette*
3.3.3	Operating time	3.3.3.1	*Operating time*		
		3.3.3.2	*Operating time total*		

Note

Spare part replacement

Menu item 3.3.7 (Spare Part Replacement) is only visible if access level is Expert.

F.12 Menu item 3.4: Diagnostics

Table F-20 Diagnostics

Level 3		Level 4		Level 5	
No.	Name	No.	Name	No.	Name
3.4.1	Sensor	*3.4.1.1*	*Driver current*		
		3.4.1.2	*Pickup S1 amplitude*		
		3.4.1.3	*Pickup S2 amplitude*		
		3.4.1.4	*Max. pickup amplitude diff*		
		3.4.1.5	*Derived frequency*		
		3.4.1.6	*Offset*		
		3.4.1.7	*Offset*		

Level 3		Level 4		Level 5	
No.	Name	No.	Name	No.	Name
3.4.2	Temperature monitoring	3.4.2.1	Medium temperature	*3.4.2.1.1*	*Current value*
		3.4.2.2	Transmitter electronics temperature	*3.4.2.2.1*	*Current value*
				3.4.2.2.2	*Minimum*
				3.4.2.2.3	*Timestamp at minimum*
				3.4.2.2.4	*Maximum*
				3.4.2.2.5	*Timestamp at maximum*
				3.4.2.3.1	*Current value*
				3.4.2.4.1	*Current value*
		3.4.2.3	DSL temperature	3.4.2.3.1	*Current value*
		3.4.2.4	Sensor frame temperature	3.4.2.4.1	*Current value*
3.4.3	Inputs and outputs	3.4.3.1	Channel 1 – output with HART	3.4.3.1.1	*Loop current*
				3.4.3.1.2	*Error status*
		3.4.3.2	Channel 2 – output	3.4.3.2.1	*Operation mode*
				3.4.3.2.2	*Loop current*
				3.4.3.2.2	*Digital output signal*
				3.4.3.2.2	*Totalized amount*
				3.4.3.2.2	*Output frequency*
				3.4.3.2.3	*Error status*
				3.4.3.2.4	*Pulse counter*
				3.4.3.2.5	*Reset pulse counter*
		3.4.3.3	Channel 3 – input/output	3.4.3.3.1	*Operation mode*
				3.4.3.3.2	*Digital input value*
				3.4.3.3.2	*Totalized amount*
				3.4.3.3.2	*Output frequency*
				3.4.3.3.2	*Digital output signal*
				3.4.3.3.2	*Loop current*
				3.4.3.3.3	*Error status*
				3.4.3.3.4	*Pulse counter*
				3.4.3.3.5	*Reset pulse counter*
		3.4.3.4	Channel 3 – relay	3.4.3.4.1	*Digital output signal*
		3.4.3.5	Channel 4 – input/output	3.4.3.5.1	*Operation mode*
				3.4.3.5.2	*Digital input value*
				3.4.3.5.2	*Totalized amount*
				3.4.3.5.2	*Output frequency*
				3.4.3.5.2	*Digital output signal*
				3.4.3.5.2	*Loop current*
				3.4.3.5.3	*Error status*
				3.4.3.5.4	*Pulse counter*
				3.4.3.5.5	*Reset pulse counter*
		3.4.3.6	Channel 4 – relay	3.4.3.6.1	*Digital output signal*

F.13 Menu item 3.5: Peak values

Table F-21 Peak value

Level 3		Level 4		Level 5	
No.	Name	No.	Name	No.	Name
3.5.1	Process value 1	*3.5.1.1*	*Process value*		
		3.5.1.2	*Minimum*		
		3.5.1.3	Timestamp at minimum		
		3.5.1.4	*Maximum*		
		3.5.1.5	Timestamp at maximum		
		3.5.1.6	*Reset*		
3.5.2	Process value 2	3.5.2.1	*Process value*		
		3.5.2.2	*Minimum*		
3.5.3	Process value 3	3.5.3.1	*Process value*		
		3.5.3.2	*Minimum*		
		3.5.3.3	Timestamp at minimum		
		3.5.3.4	*Maximum*		
		3.5.3.5	Timestamp at maximum		
		3.5.3.6	*Reset*		
3.5.3	Process value 4	3.5.4.1	*Process value*		
		3.5.4.2	*Minimum*		
		3.5.4.3	Timestamp at minimum		
		3.5.4.4	*Maximum*		
		3.5.4.5	Timestamp at maximum		
		3.5.4.6	*Reset*		

F.14 Menu item 3.6: Characteristics

Table F-22 Characteristics

Level 3		Level 4		Level 5	
No.	Name	No.	Name	No.	Name
3.6.1	*SIL Variant*				
3.6.2	*CT Variant*				
3.6.3	*CT Active*				
3.6.4	Transmitter	*3.6.4.1*	*Composition*		
		3.6.4.2	*Hazardous area Approval*		

Level 3		Level 4		Level 5	
No.	Name	No.	Name	No.	Name
3.6.5	Sensor	*3.6.5.1*	*Hazardous area Approval*		
		3.6.5.2	*Maximum massflow capacity*		
		3.6.5.3	*Calibration factor*		
		3.6.5.4	*Density calibration offset*		
		3.6.5.5	*Density calibration factor*		
		3.6.5.6	*Density compensation tube temperature*		
		3.6.5.7	*Density compensation sensor frame temperature*		
		3.6.5.8	*Wetted materials*		
3.6.4	Fraction order code				

F.15 Menu item 3.7: SensorFlash

Table F-23 SensorFlash

Level 3		Level 4		Level 5	
No.	Name	No.	Name	No.	Name
3.7.1	*Eject*				
3.7.2	*installed*				
3.7.3	*Capacity*				
3.7.4	*Free space*				

Level 3		Level 4		Level 5	
No.	Name	No.	Name	No.	Name
3.7.5	Data logging	*3.7.5.1*	*Activation*		
		3.7.5.2	*Data logging mode*		
		3.7.5.3	*Logging interval*		
		3.7.5.4	*Process values*	*3.7.5.4.1*	*Logging value 1*
				3.7.5.4.2	*Logging value 2*
				3.7.5.4.3	*Logging value 3*
				3.7.5.4.4	*Logging value 4*
				3.7.5.4.5	*Logging value 5*
				3.7.5.4.6	*Logging value 6*
				3.7.5.4.7	*Logging value 7*
				3.7.5.4.8	*Logging value 8*
				3.7.5.4.9	*Logging value 9*
				3.7.5.4.10	*Logging value 10*
				3.7.5.4.11	*Logging value 11*
				3.7.5.4.12	*Logging value 12*
				3.7.5.4.13	*Logging value 13*
				3.7.5.4.14	*Logging value 14*
				3.7.5.4.15	*Logging value 15*
				3.7.5.4.16	*Logging value 16*
				3.7.5.4.17	*Logging value 17*
				3.7.5.4.18	*Logging value 18*
				3.7.5.4.19	*Logging value 19*
				3.7.5.4.20	*Logging value 20*
		3.7.5.5	Advanced logging	*3.7.5.5.1*	*Register 1*
				3.7.5.5.2	*Register 2*
				3.7.5.5.3	*Register 3*
				--	--
				--	--
				--	--
				3.7.5.5.90	*Register 90*

F.16 Menu item 3.8: Simulation

Table F-24 Input/Outputs

Level 3		Level 4		Level 5	
No.	Name	No.	Name	No.	Name
3.8.1	Simulation inputs and outputs	3.8.1.1	CH1 - output with HART	*3.7.1.1.1*	*Simulation*
				3.7.1.1.2	*Simulation value*
		3.8.1.2	CH2 - output	*3.8.1.2.1*	*Operation mode*
				3.8.1.2.2	*Simulation*
				3.8.1.2.3	*Simulation value*
				3.8.1.3.1	*Operation mode*
				3.8.1.3.2	*Simulation*
				3.8.1.3.3	*Simulation value*
				3.8.1.4.1	*Simulation*
				3.8.1.4.2	*Simulation value*
		3.8.1.2	CH3 - input/output	*3.7.1.3.1*	*Simulation*
				3.7.1.3.2	*Simulated Value*
				3.7.1.3.3	*Simulation*
				3.7.1.3.4	*Simulated Value*
				3.7.1.3.5	*Simulation*
				3.7.1.3.6	*Simulated Value*
				3.7.1.3.7	*Simulation*
				3.7.1.3.8	*Simulated Value*
		3.8.1.4	CH3 - relay	*3.7.1.4.1*	*Simulation*
				3.7.1.4.2	*Simulated Value*
		3.7.1.5	CH4 - input/output	*3.8.1.5.1*	*Operation mode*
				3.8.1.5.2	*Simulation*
				3.8.1.6.3	*Simulation value*
		3.7.1.6	CH4 - relay	*3.8.1.6.1*	*Simulation*
				3.8.1.6.2	*Simulation value*
3.8.2	Simulation process values	3.8.2.1	Enable Simulation		
		3.8.2.2	Mass flow	3.8.2.2.1	*Simulation value*
		3.8.2.3	Volume flow	3.8.2.3.1	*Simulation value*
		3.8.2.4	Standard volume flow	3.8.2.4.1	*Simulation value*
		3.8.2.6	Density	3.8.2.6.1	*Simulation value*
		3.8.2.7	Medium temperature	3.8.2.7.1	*Simulation value*
		3.8.2.9	Fraction A % value	3.8.2.9.1	*Simulation value*
		3.8.2.10	Fraction B % value	3.8.2.10.1	*Simulation value*

Level 3		Level 4		Level 5	
No.	Name	No.	Name	No.	Name
3.8.3	Simulation alarms	3.8.3.1	Simulation mode		
		3.8.3.2	Alarms	3.8.3.2.1	*Simulation sensor alarms (1)*
				3.8.3.2.2	*Simulation sensor alarms (2)*
				3.8.3.2.4	*Process alarms (1)*
				3.8.3.2.5	*Process alarms (2)*
				3.8.3.2.7	*Totalizer alarms*
				3.8.3.2.8	*Device alarms*
				3.8.3.2.9	*Channel 1 alarms*
				3.8.3.2.10	*Input/output alarms (1)*
				3.8.3.2.12	*Dosing alarms*
		3.8.3.3	Alarm class		
		3.8.3.3	NAMUR status signal		

F.17 Menu item 3.9: Audit trail

Table F-25 Audit Trail

Level 3		Level 4		Level 5	
No.	Name	No.	Name	No.	Name
3.9.1	*Parameter change log*				
3.9.2	*Clear parameter change log*				
3.9.3	*FW update change log*				
3.9.4	*Clear FW update change log*				

F.18 Menu item 3.10: Self test

Table F-26 Self test

Level 3		Level 4		Level 5	
No.	Name	No.	Name	No.	Name
3.10.1	*Display test*				

F.19 Menu item 3.11: Resets

Table F-27 Resets

Level 3		Level 4		Level 5	
No.	Name	No.	Name	No.	Name
3.11.1	*Factory reset*				
3.11.2	*Device restart*				

F.20 Menu item 3.12: Firmware update

Table F-28 Firmware update

Level 3		Level 4		Level 5	
No.	Name	No.	Name	No.	Name
3.12	*Firmware update*				

F.21 Menu item 4: Communication

Table F-29 Communication

Level 3		Level 4		Level 5	
No.	Name	No.	Name	No.	Name
4.1	USB (Service channel)	*4.1.1*	*USB mode*		
		4.1.2	Auto connection		
		4.1.3	*MSD connent*		

Level 3		Level 4		Level 5	
No.	Name	No.	Name	No.	Name
4.2	HART (CH1)	*4.2.1*	*Polling address (SW)*		
		4.2.2	*Polling address (HW)*		
		4.2.3	*Tag*		
		4.2.4	*Hart device type*		
		4.2.5	*HART revision*		
		4.2.6	*Number of response preambles*		
		4.2.7	Dynamic variable mapping	*4.2.7.1*	*SV selection*
				4.2.7.2	*TV selection*
		4.2.8	Hart units	*4.2.8.1*	*Mass flow units*
				4.2.8.2	*Volume flow units comms*
				4.2.8.3	*Standard volume flow units*
				4.2.8.4	*Density units*
				4.2.8.5	*Fraction mass flow units*
				4.2.8.6	*Fraction volume flow units*
				4.2.8.9	*Temperature units*
				4.2.8.10	*Totalizer 1 units*
				4.2.8.11	*Totalizer 2 units*
				4.2.8.12	*Totalizer 3 units*
		4.2.9	Damping	*4.2.9.1*	*Damping value*
				4.2.9.2	*Process values (1)*
				4.2.9.3	*Process values (2)*

Level 3		Level 4		Level 5	
No.	Name	No.	Name	No.	Name
4.3	Modbus (Channel 1)	4.3.1	*Slave address (SW)*		
		4.3.2	*Slave address (HW)*		
		4.3.3	*Restart communication*		
		4.3.4	*Data rate*		
		4.3.5	*Parity and stopbits*		
		4.3.6	*Floating point byte error*		
		4.3.7	*Integer byte order*		
		4.3.8	*Register mapping*		
		4.3.9	Modbus units	*4.3.9.1*	*Mass flow units*
				4.3.9.2	*Volume flow units comms*
				4.3.9.3	*Standard volume flow units*
				4.3.9.4	*Density units*
				4.3.9.5	*Fraction mass flow units*
				4.3.9.6	*Fraction volume flow units*
				4.3.9.9	*Temperature units*
				4.3.9.10	*Totalizer 1 units*
				4.3.9.11	*Totalizer 2 units*
				4.3.9.12	*Totalizer 3 units*
		4.3.10	Damping	*4.3.10.0*	*Damping value*
				4.3.10.1	*Process values (1)*
				4.3.10.2	*Process values (2)*
4.4	PROFIBUS DP/PA	*4.4.1*	*Slave address*		

F.22 Menu item 5: Security

Table F-30 Security

Level 3		Level 4		Level 5	
No.	Name	No.	Name	No.	Name
5.1	*Change user PIN*				
5.2	*Change expert PIN*				
5.3	*Recovery ID*				
5.4	*PIN recovery*				
5.5	*Activate user PIN*				
5.6	*Deactivate user PIN*				
5.7	*Auto logout*				
5.8	*Logout*				

Index

L

M

N

O

P

Q

R

S

T

V

W

Z